Green Room®

BY WILLAB GARDEN

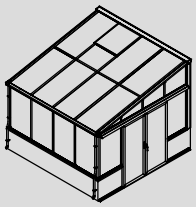	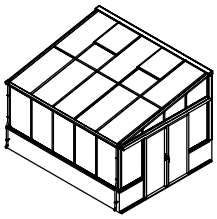	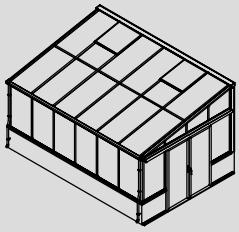	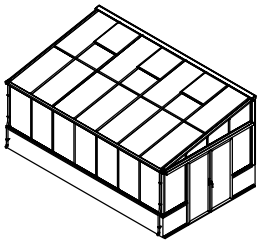	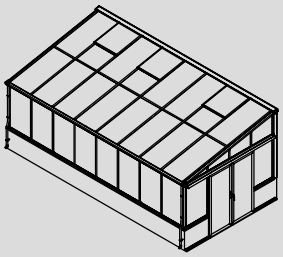
3181-FDG	3182-FDG	3183-FDG	3184-FDG	3185-FDG
314×320×270 cm	389×320×270 cm	464×320×270 cm	539×320×270 cm	614×320×270 cm

Product size (L×W×H):
Storlek (L×B×H):
Størrelse (L×B×H):
Størrelse (L×B×H):
Koko (P×L×K):
Produktgröße (L×B×H):

Please read carefully before assembling.
Two people are needed.

Läs noggrant innan montering.
Det krävs två personer för montering.

Læs venligst omhyggeligt, før montering.
Der kræves to personer til montering.

Les monteringsanvisningen nøye innen montering.
Det kreves to personer for montering.

Lue ohjeet huolellisesti läpi ennen asentamista.
Asentamiseen tarvitaan kaksi henkilöä.

Bitte vor dem Aufbau sorgfältig lesen.
Zwei Personen werden benötigt.

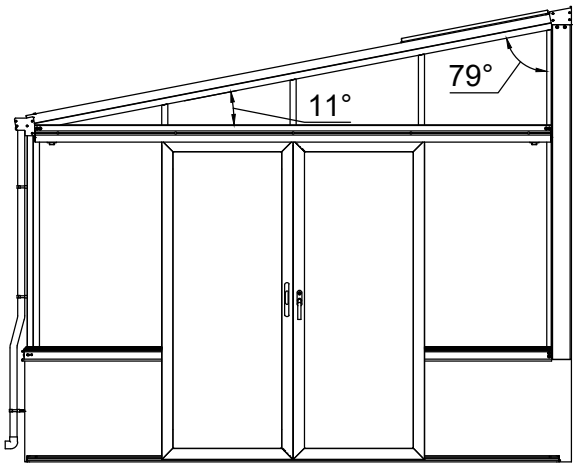

230208

Part	3181		3182		3183		3184		3185		QTY.	Code	Page
	NO.	Length(MM)	NO.	Length(MM)	NO.	Length(MM)	NO.	Length(MM)	NO.	Length(MM)			
	40L-Y62-4-11	3134	40L-Y62-5-11	3885	40L-Y62-6-11	4636	40L-Y62-7-11	5387	40L-Y62-8-11	6138	1	A003	P4
	40LA-Y63-4-11	3157	40LA-Y63-5-11	3908	40LA-Y63-6-11	4659	40LA-Y63-7-11	5410	40LA-Y63-8-11	6161	1	A004	P5
	40LA-Y26A-4	3157	40LA-Y26A-5	3908	40LA-Y26A-6	4659	40LA-Y26A-7	5410	40LA-Y26A-8	6161	1	A005	P6
	40LA-Y26B-4	2899	40LA-Y26B-5	3650	40LA-Y26B-6	4401	40LA-Y26B-7	5152	40LA-Y26B-8	5903	1	A006	P6
	40LA-Y28A-4	3157	40LA-Y28A-5	3908	40LA-Y28A-6	4659	40LA-Y28A-7	5410	40LA-Y28A-8	6161	1	A007	P6
	40LA-Y28B-4	2917	40LA-Y28B-5	3668	40LA-Y28B-6	4419	40LA-Y28B-7	5170	40LA-Y28B-8	5921	1	A008	P6

Part	NO.	QTY.					Length(MM)	Page
		3181	3182	3183	3184	3185		
	40X-P80E-B	1	2	2	3	3	801	P5
	40A-Y30	8	9	10	11	12	1235	P7
	40L-Y33R-11	1	2	2	3	3	3079	P9
	40L-Y33L-11	1	2	2	3	3	3079	P9
	40L-Y34A	1	2	2	3	3	713	P9
	40L-Y33A-11	1	0	1	0	1	3079	P9
	40L-Y36N2	2	3	4	5	6	713	P9
	40A-Y01	10	11	12	13	14	1235	P11
	40L-Y06-11	5	6	7	8	9	3118	P15

Part	NO.	QTY.					Length(MM)	Page
		3181	3182	3183	3184	3185		
	40L-Y07	1	2	2	3	3	713	P15
	40L-Y08N2	2	3	4	5	6	713	P15
	40X-P80E-A	1	2	2	3	3	791	P25
	40X-Y81E	2	4	4	6	6	882	P25
	40X-Y82E	1	2	2	3	3	801	P25

Part	NO.	QTY.	Length(MM)	Page
	40LA-Y20R-11	1	1960	P2
	40LA-Y20L-11	1	1960	P2
	40A-Y20	2	1236	P3
	40L-S60R	1	3023	P4
	40LA-S61L	1	3023	P4
	40LA-Y25A-11	2	1960	P6
	40LA-Y25B-11	2	1911	P6
	40LA-Y27A-11	2	1960	P6
	40LA-Y27B-11	2	1911	P6
	40LA-Y30	2	1235	P7
	40L-Y31R-11	1	561	P8
	40L-Y31L-11	1	561	P8
	40X-Y31R-11A	1	124	P8
	40X-Y31L-11A	1	124	P8
	40X-Y31R-11B	1	270	P8
	40X-Y31L-11B	1	270	P8
	40X-Y31R-11C	1	416	P8
	40X-Y31L-11C	1	416	P8
	40L-Y21-11	1	3118	P8
	40L-Y22-11	1	3118	P8
	40L-Y36N1	2	711	P9
	40A-Y02	2	1235	P11
	40LA-Y01	2	1235	P11
	40L-Y05L-11	1	3080	P13
	40X-Y04L-11C	1	416	P13
	40X-Y04L-11B	1	270	P13
	40X-Y04L-11A	1	124	P13
	40L-Y04L-11	1	560	P13
	40L-Y05R-11	1	3080	P14
	40X-Y04R-11C	1	416	P14

Part	NO.	QTY.	Length(MM)	Page
	40X-Y04R-11B	1	270	P14
	40X-Y04R-11A	1	124	P14
	40L-Y04R-11	1	560	P14
	40L-Y08N1	2	711	P15
	40A-Y90	2	1866	P18
	40A-Y91R	1	1866	P18
	40A-Y91L	1	1866	P18
	40A-Y92R	1	769	P18
	40A-Y92L	1	769	P18
	40A-Y93	2	769	P18
	40A-Y95	4	1765	P19
	40A-Y96	4	668	P19
	40A-Y97R	1	1860	P21
	40A-Y97-A	2	1851	P21
	40A-Y97L	1	1860	P21
	40A-Y94	1	1835	P21
	40A-Y98-R	1	1910	P22
	40A-Y98-L	1	1910	P22
	40A-Y99	1	1424	P22
	40A-Y100	1	1424	P22
	40A-Y64	1	3016	P23
	40A-Y17	1	3110	P23
	40A-Y98A-R	1	1855	P23
	40A-Y98A-L	1	1855	P23

Part	NO.	QTY.					Length(MM)	Page
		3181	3182	3183	3184	3185		
	W06	6	10	10	14	14	46	P2~25
	Si6-16	88	100	108	120	128	PCS	P2~22
	J05	109	121	129	141	149	PCS	P2~27
	M6-8	30	32	34	36	38	PCS	P2~9
	J09	12	20	20	28	28	PCS	P2~26
	7C28-004	13	17	17	21	21	PCS	P4~23
	T07	2	4	4	6	6	PCS	P5
	PSJ10-80	18	20	20	22	22	PCS	P6
	DQ8-16	18	20	20	22	22	PCS	P6
	SW8-80	18	20	20	22	22	PCS	P6
	Si5-16	4	8	8	12	12	PCS	P9
	7B26-069	5	6	7	8	9	PCS	P15
	J13	6M	6M	6M	8M	8M		P15
	Z4.8-19	16	20	24	28	32	PCS	P15
	W04	20	24	24	28	28	PCS	P18~25
	7C26-007N	17.5M	18.3M	19M	19.8M	20.5M		P12~16
	7C26-038	3M	3M	3.8M	3.8M	4.5M		P16
	MCJT002	15.5M	19M	19M	22.5M	22.5M		P20~26

Part	NO.	QTY.	Length(MM)	Page
	7B26-025	4	PCS	P2
	PS8-80	12	PCS	P2
	7B26-017	2	PCS	P3
	J08	1	PCS	P3~27
	7B26-077	2	PCS	P4
	M8-20	4	PCS	P4
	Si6-25	6	PCS	P5
	7C26-031	10	PCS	P6~23
	MF6	6	PCS	P7~8
	Si6-12	6	PCS	P7~8
	7B26-068	2	PCS	P8
	Si8-25	4	PCS	P8
	7B33-020	8	PCS	P8
	Si8-16	4	PCS	P8
	GREASE	1	PCS	P15
	W03	8	30	P18
	Z4.2-13	16	PCS	P21~24
	T04	2	PCS	P21
	Z4.2-38	3	PCS	P21
	Z3.5-25	8	PCS	P21~24
	M6-35	2	PCS	P22
	Si6-35	6	PCS	P22
	PS6-60	2	PCS	P22
	Z4.2-50	5	PCS	P23
	Si6-25	3	PCS	P23
	T01	1	PCS	P24
	T01A	1	PCS	P24
	J02	2	PCS	P24
	7B26-039	2	PCS	P24
	7B26-038	2	PCS	P24

Part	NO.	QTY.	Length(MM)	Page
	M4-40	2	PCS	P24
	Mi4-17	2	PCS	P24
	7C33-S02	2	PCS	P28
	7C33-S03	4	PCS	P29
	Z4.8-25	4	PCS	P29
	7C33-S04	2	PCS	P29
	J07-A	2	PCS	P29
	J07-B	2	PCS	P29
	7B26-074	1	PCS	P30
	7B26-073	1	PCS	P30
	7C26-039	2	PCS	P30
	Za4.2-13	18	PCS	P30
	7B26-076	1	PCS	P30
	7B26-075	1	PCS	P30
	7C26-040	2	PCS	P30
	L06	2	1400	P4
	NSST120	1.9M		P21
	7C26-S01A	2	1900	P29
	TOOL-001	1	274	P2~30
	TOOL-002	1	80	P2~30
	TOOL-003A	1	2MM	P5~7
	TOOL-004A	1	3MM	
	TOOL-005	1	4MM	P2~27
	TOOL-006	1	5MM	P2~22
	TOOL-007	1	6MM	P4

	Part	NO.	QTY.	Length(MM)	Page	Code
3171P-S-BASE4		40A-Y11-4	1	3173	P2	A001
		40A-Y11-4A	1	2963	P2	A002
		40X-Y14	1	3149	P11	A009
		40L-Y62-4A	1	3134	P17	A010

	Part	NO.	QTY.	Length(MM)	Page	Code
3171P-S-BASE5		40A-Y11-5	1	3924	P2	A001
		40A-Y11-5A	1	3714	P2	A002
		40X-Y15-5	1	3900	P11	A009
		40L-Y62-5A	1	3885	P17	A010

	Part	NO.	QTY.	Length(MM)	Page	Code
3171P-S-BASE6		40A-Y11-6	1	4675	P2	A001
		40A-Y11-6A	1	4465	P2	A002
		40X-Y15-6	1	4651	P11	A009
		40L-Y62-6A	1	4636	P17	A010

	Part	NO.	QTY.	Length(MM)	Page	Code
3171P-S-BASE7		40A-Y11-7	1	5426	P2	A001
		40A-Y11-7A	1	5216	P2	A002
		40X-Y15-7	1	5402	P11	A009
		40L-Y62-7A	1	5387	P17	A010

	Part	NO.	QTY.	Length(MM)	Page	Code
3171P-S-BASE8		40A-Y11-8	1	6177	P2	A001
		40A-Y11-8A	1	5967	P2	A002
		40X-Y15-8	1	6153	P11	A009
		40L-Y62-8A	1	6138	P17	A010

	Part	NO.	QTY.	Length(MM)	Page
3171P-S-4F		40LA-Y12L	1	3098	P2
		40LA-Y12L-A	1	3023	P2
		40L-S15L-4	1	3086	P11
		40X-Y60-AN	1	3023	P17

	Part	NO.	QTY.	Length(MM)	Page
3171P-S-4-REAR		40A-Y13L	1	854	P2
		40LA-Y13R	1	779	P2
		40A-Y13L-A	1	779	P2
		40LA-Y13-A	1	779	P2
		40A-Y15-L	1	842	P11
		40LA-Y15	1	779	P11

CTN NO.	QTY.				
	3181	3182	3183	3184	3185
3171P-S-BASE4	1	0	0	0	0
3171P-S-BASE5	0	1	0	0	0
3171P-S-BASE6	0	0	1	0	0
3171P-S-BASE7	0	0	0	1	0
3171P-S-BASE8	0	0	0	0	1
3171P-S-4F	1	1	1	1	1
3171P-S-4-REAR	1	1	1	1	1

Part	NO.	QTY.					Length(MM)	Page
		3181	3182	3183	3184	3185		
	730×1262	10	11	12	13	14	1262	P10
	620×134	2	2	2	2	2	620	P13~14
	730×280	2	2	2	2	2	730	P13~14
	730×426	2	2	2	2	2	730	P13~14
	730×572	2	2	2	2	2	730	P13~14
	729×1555	7	8	10	11	13	1555	P15
	729×674	1	2	2	3	3	729	P15
	659×1756	2	2	2	2	2	1756	P19
	782×863	1	2	2	3	3	863	P25

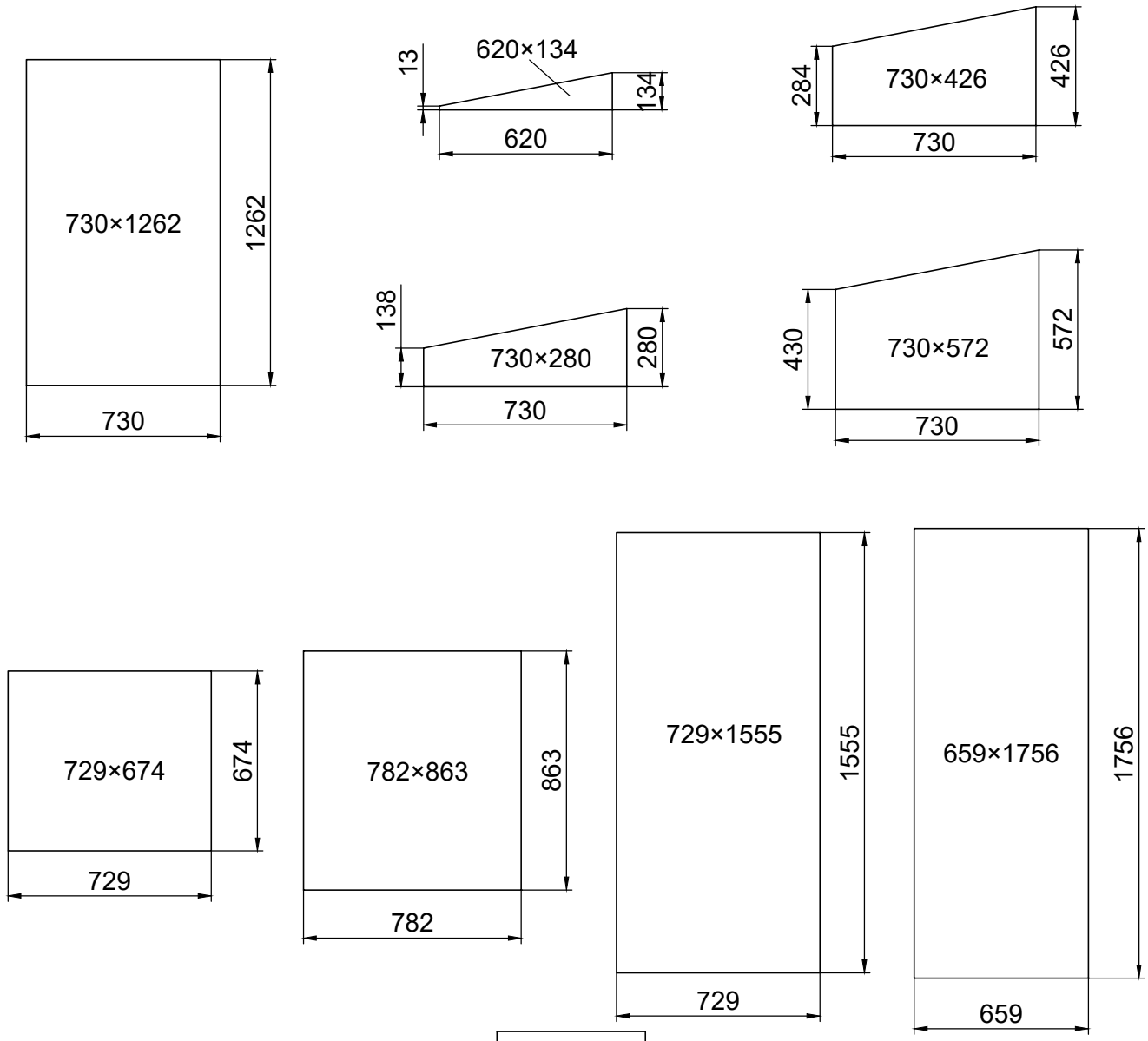

NO.	3181	3182	3183	3184	3185
L	3139	3890	4641	5392	6143
AREA	10.0 M^2	12.4 M^2	14.8 M^2	17.2 M^2	19.6 M^2

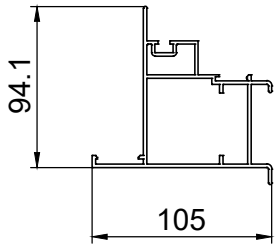

Sealing should be done to prevent frost from destroying the wall. The sealant between the wall and foundation of the greenroom is provided and handled by customers themselves.

Tätning bör göras för att muren ej skall frostsprängas. Tätning mellan mur och sockel står kunden själv för.

Tætningen bør gøres for at forhindre frostsprængninger i muren. Tætningen mellem mur og aluminiumprofil står kunden selv for

En tetning bør lages for å hindre frostsprengning av muren. Tetning mellom mur og sokkel ordnes av kunden selv

Tiivistys täytyy tehdä, jotta muuri ei hajoa pakkasella. Tiiviste muurin ja sokkelin välissä täytyy asiakkaan hoitaa itse

Die Abdichtung sollte erfolgen, um zu verhindern, dass der Frost die Wand zerstört. Die Abdichtung zwischen der Wand und dem Fundament des Greenrooms wird vom Kunden selbst besorgt und durchgeführt.

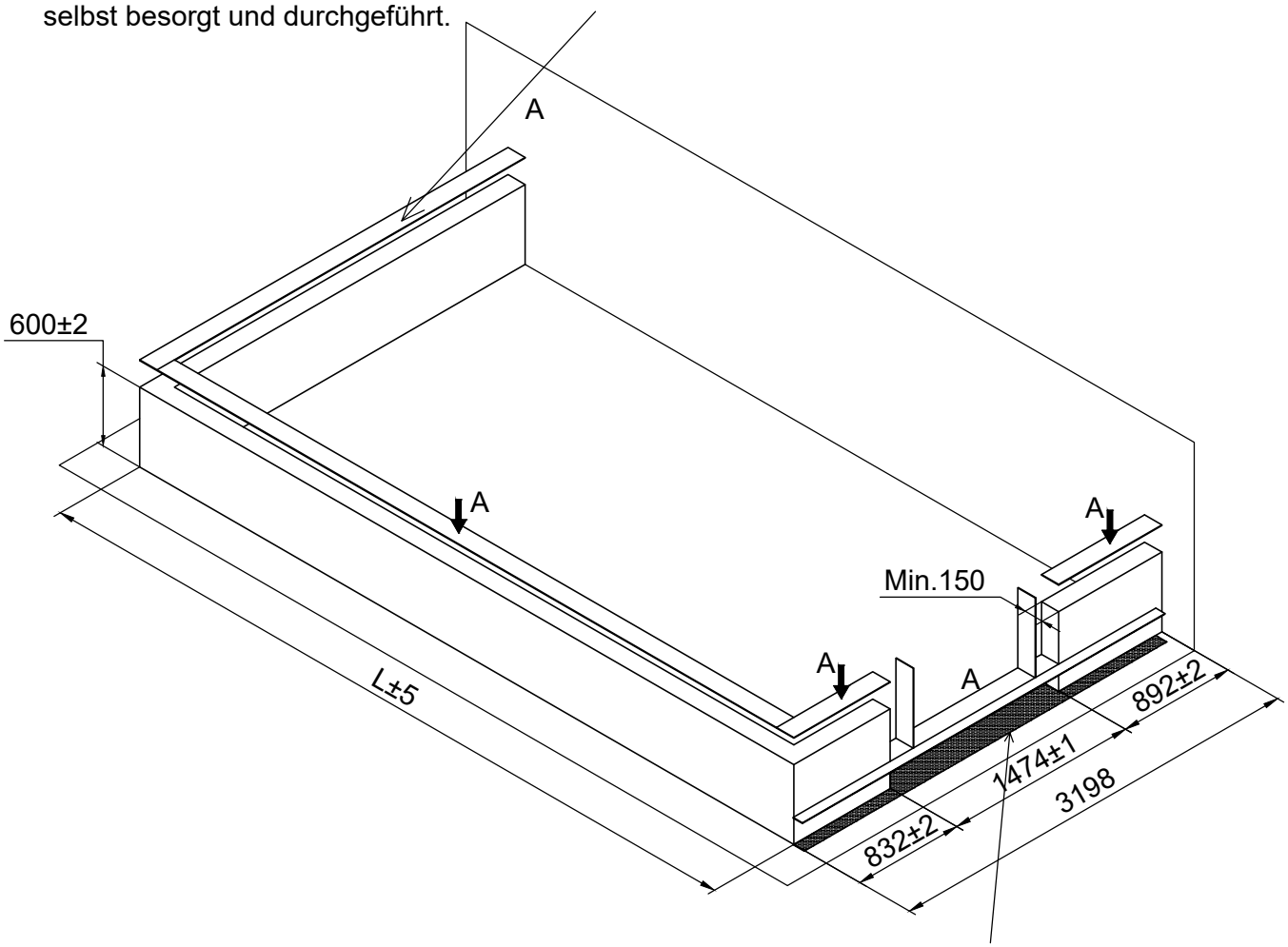

Make sure the floor below the doors frame should be flat and solid.
Se till att underlaget under dörrramen är plan och på solid grund.
Sørg for, at underlaget under dørkarmen er plan og på fast grund.
Sørg for at underlaget under dørterskelen er slett og på solid fundament.
Tarkista, että maa ovikarmin alla on sileä ja tasainen.
Achten Sie darauf, dass der Boden unter dem Türrahmen eben und fest ist.

Part	Product	NO.	Length(MM)	QTY.	CTN NO.	Code
	3181	40A-Y11-4	3173	1	3171P-S-BASE4	A001
	3182	40A-Y11-5	3924	1	3171P-S-BASE5	
	3183	40A-Y11-6	4675	1	3171P-S-BASE6	
	3184	40A-Y11-7	5426	1	3171P-S-BASE7	
	3185	40A-Y11-8	6177	1	3171P-S-BASE8	

Part	NO.	Length(MM)	QTY.	CTN NO.
	40LA-Y12L	3098	1	3171P-S-4F
	40A-Y13R	854	1	3171P-S-4-REAR
	40LA-Y13L	779	1	3171P-S-4-REAR

Part	NO.	QTY.	Length(MM)
	40LA-Y20R-11	1	1960
	40LA-Y20L-11	1	1960

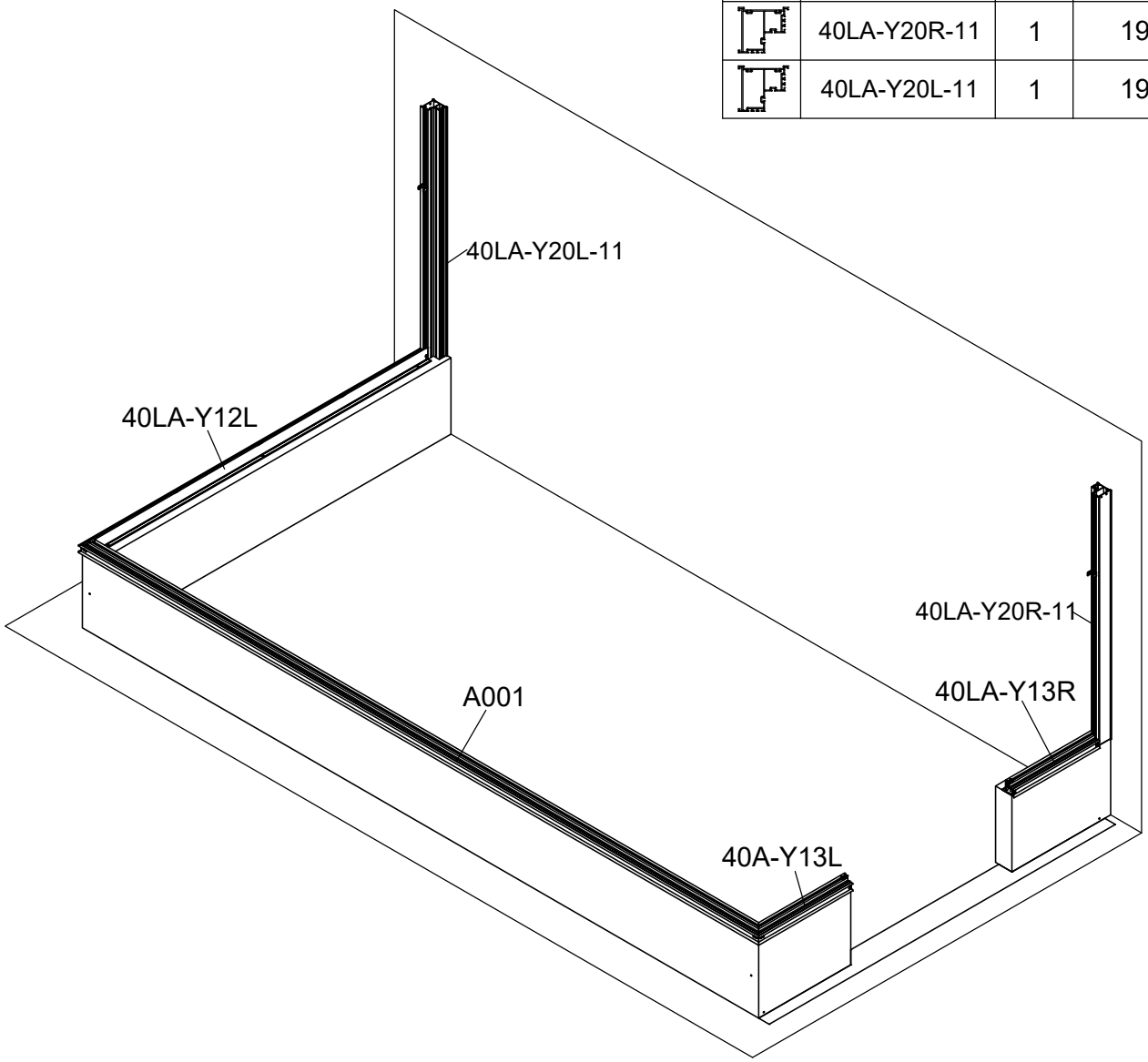

Part	NO.	QTY.	Length(MM)
	W06	2	46
	Si6-16	6	PCS
	J05	6	PCS
	M6-8	2	PCS
	7B26-025	4	PCS

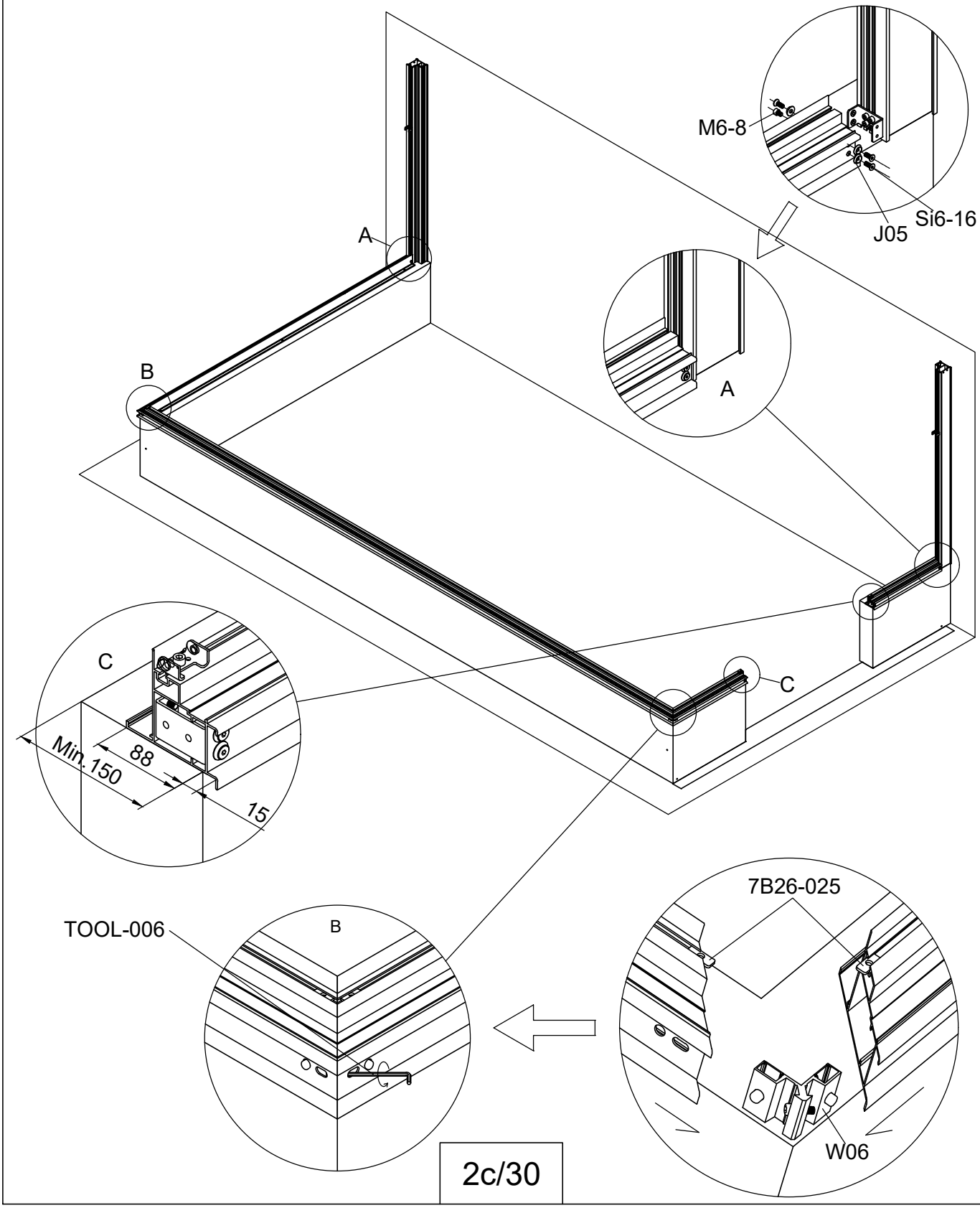

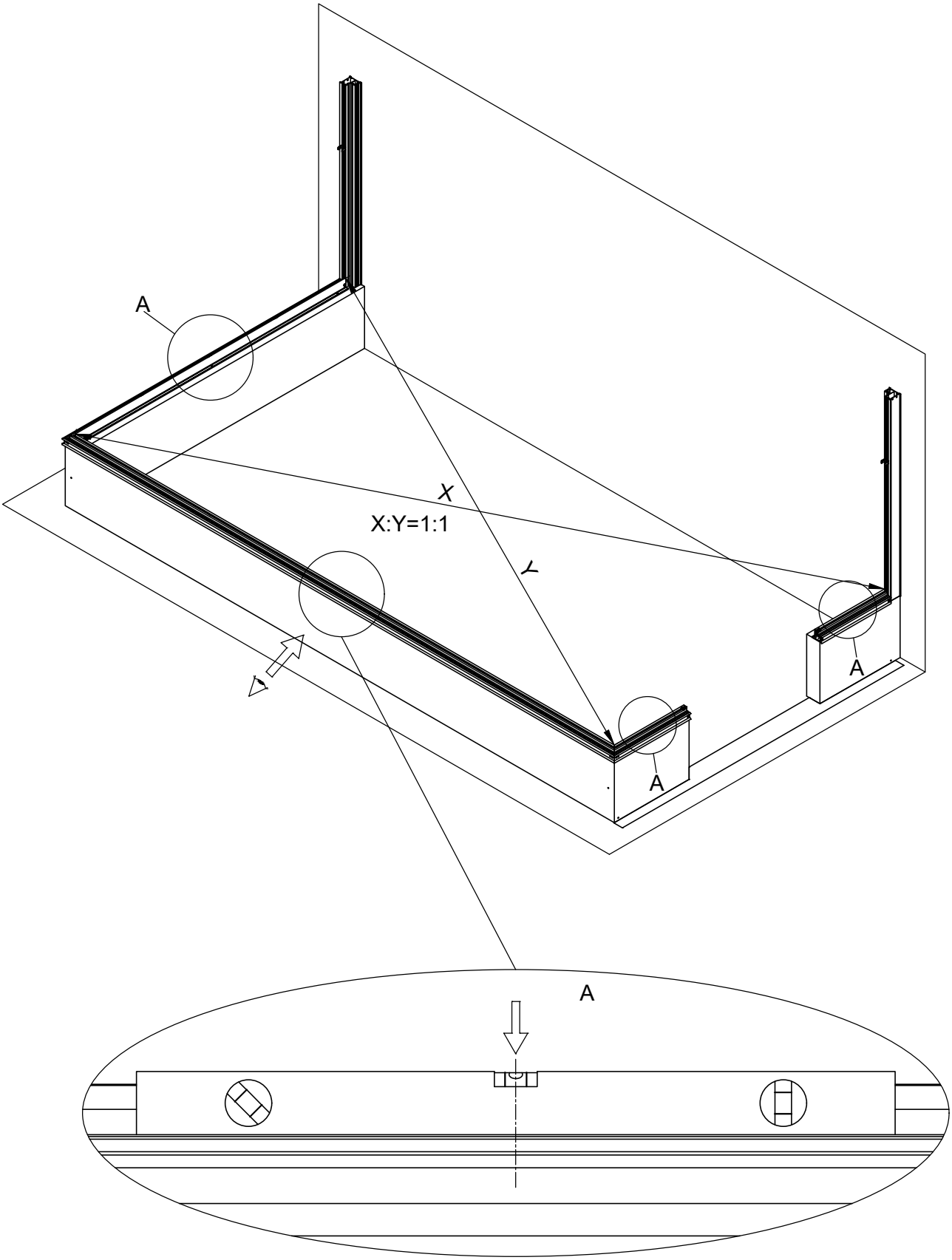
A
X
X:Y=1:1
Y
A
A
A

Part	NO.	QTY.	Length(MM)
	PS8-80	11	PCS

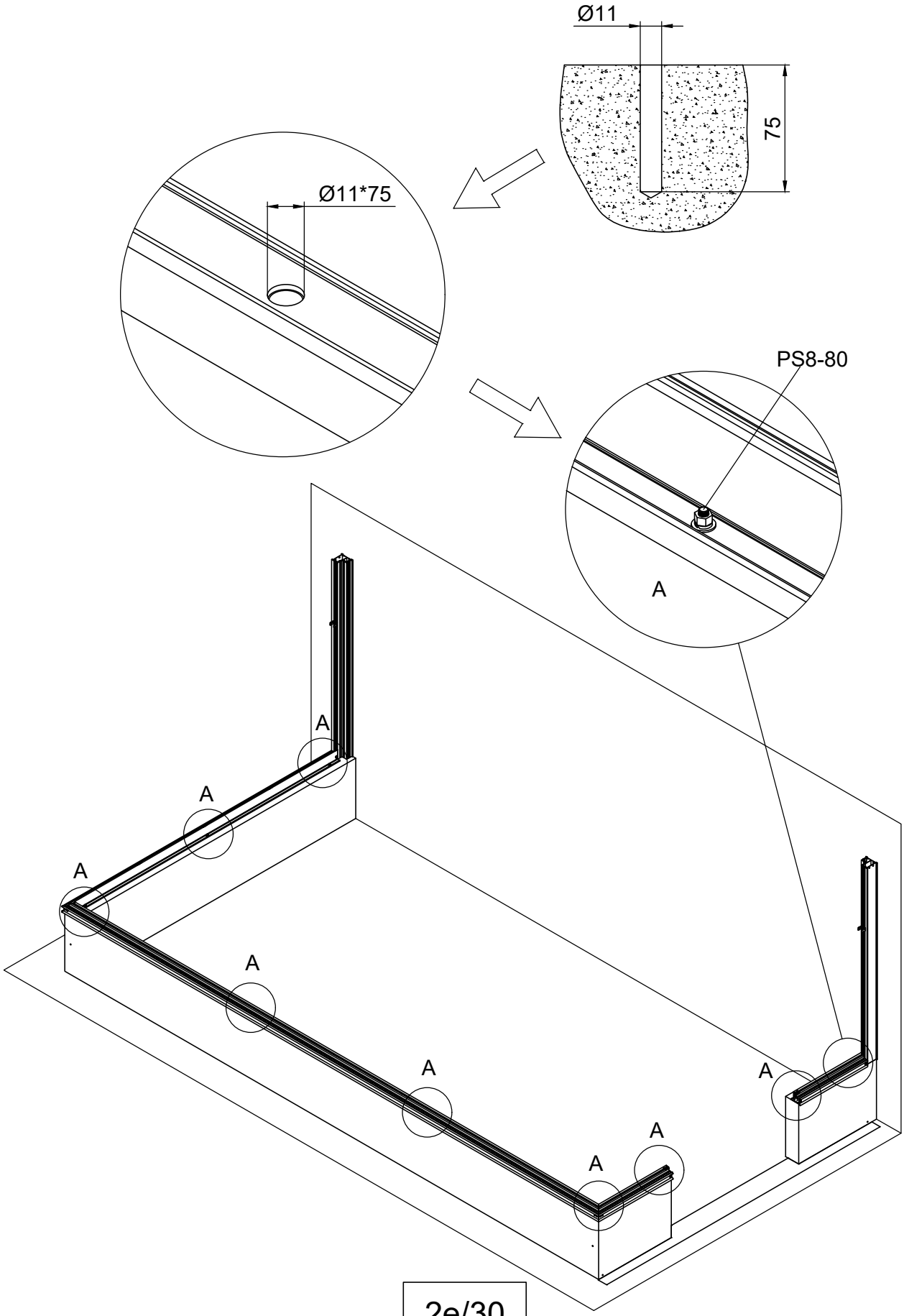

Part	Product	NO.	Length(MM)	QTY.	CTN NO.	Code
	3181	40A-Y11-4A	2963	1	3171P-S-BASE4	A002
	3182	40A-Y11-5A	3714	1	3171P-S-BASE5	
	3183	40A-Y11-6A	4465	1	3171P-S-BASE6	
	3184	40A-Y11-7A	5216	1	3171P-S-BASE7	
	3185	40A-Y11-8A	5967	1	3171P-S-BASE8	

Part	NO.	Length(MM)	QTY.	CTN NO.
	40LA-Y12L-A	3023	1	3171P-S-4F
	40A-Y13L-A	779	1	3171P-S-4-REAR
	40LA-Y13-A	779	1	3171P-S-4-REAR

Part	NO.	QTY.	Length(MM)
	J09	4	PCS

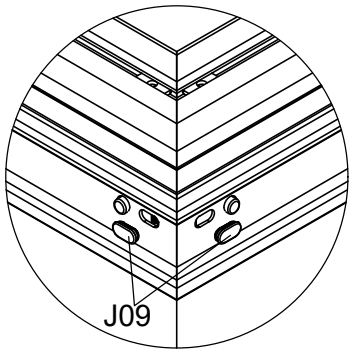

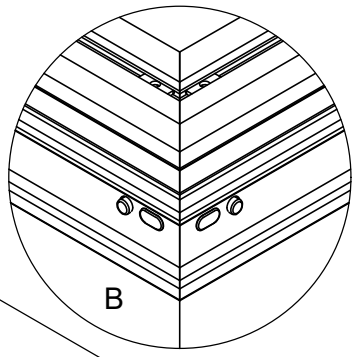

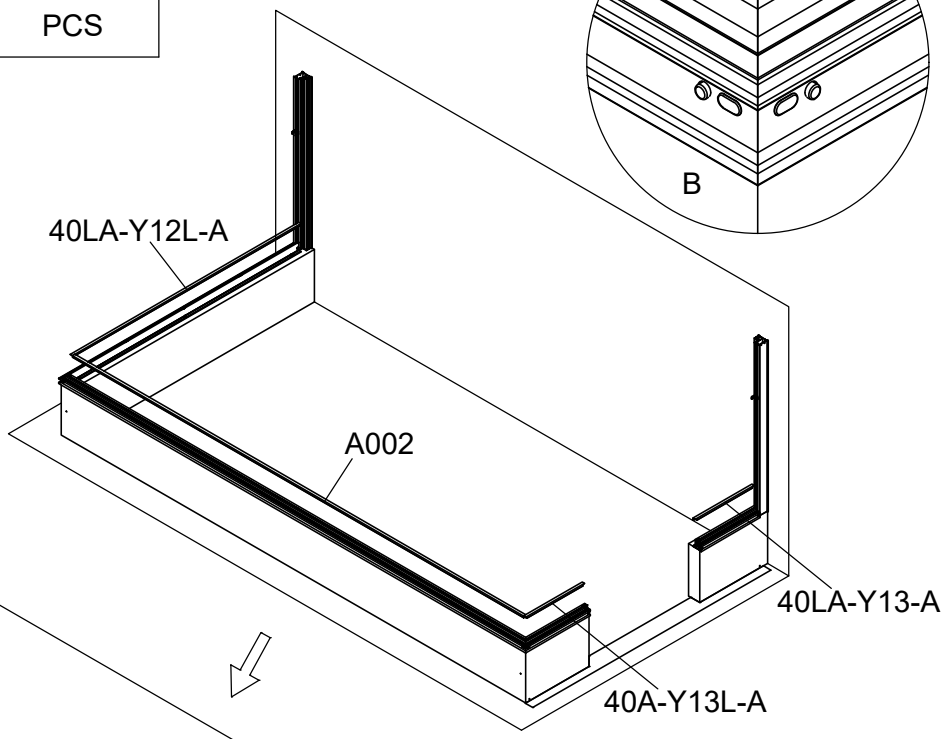

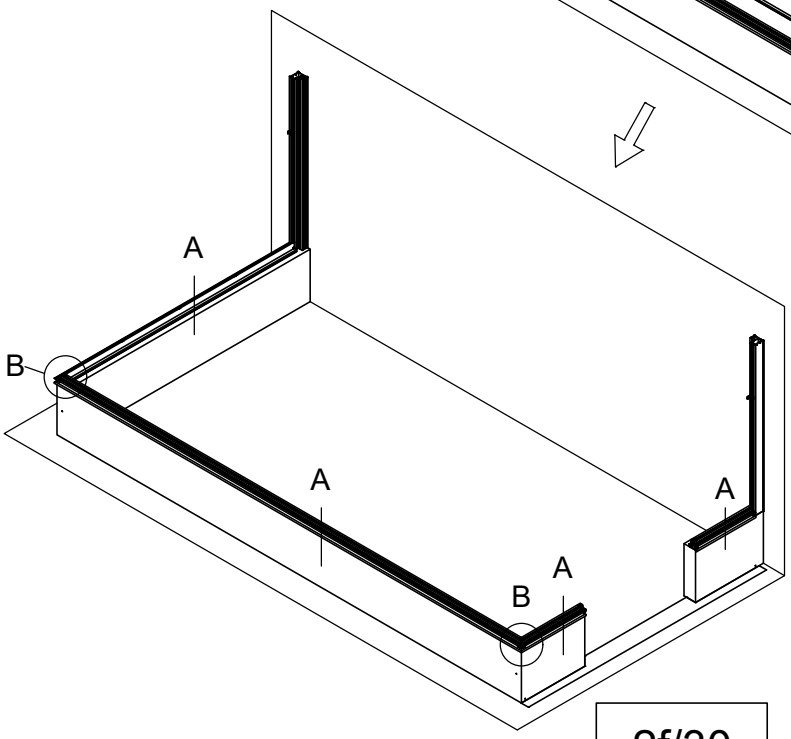

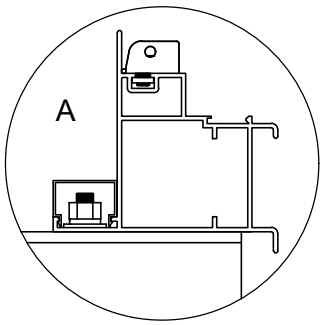

Part	NO.	QTY.	Length(MM)
	7B26-017	2	PCS
	M6-8	4	PCS
	J08	1	PCS

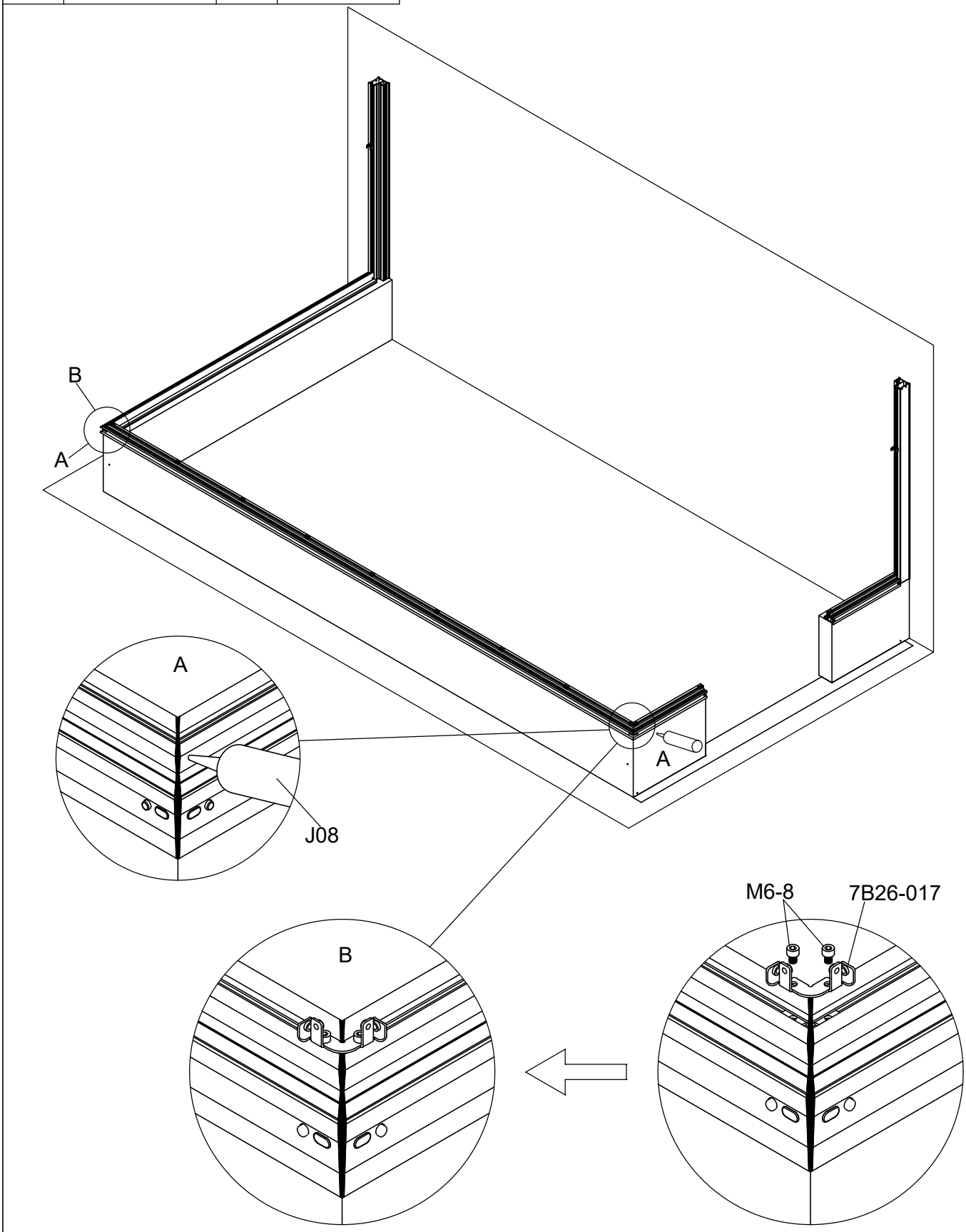

Part	NO.	QTY.	Length(MM)
	40A-Y20	2	1236
	Si6-16	4	PCS
	J05	4	PCS
	M6-8	4	PCS

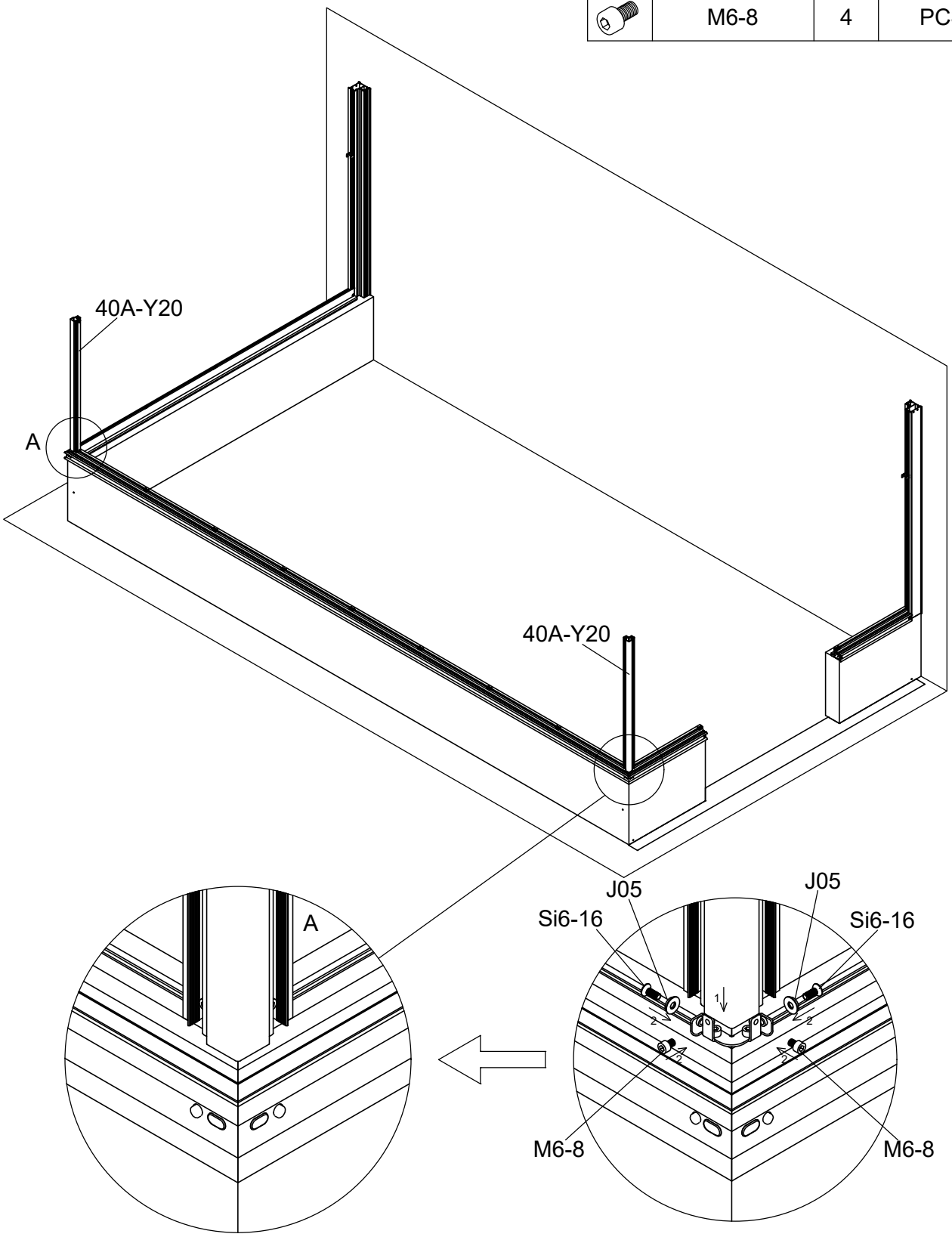

Part	NO.	QTY.	Length(MM)
	40L-S60R	1	3023
	40LA-S61L	1	3023
	Si6-16	10	PCS
	J05	10	PCS

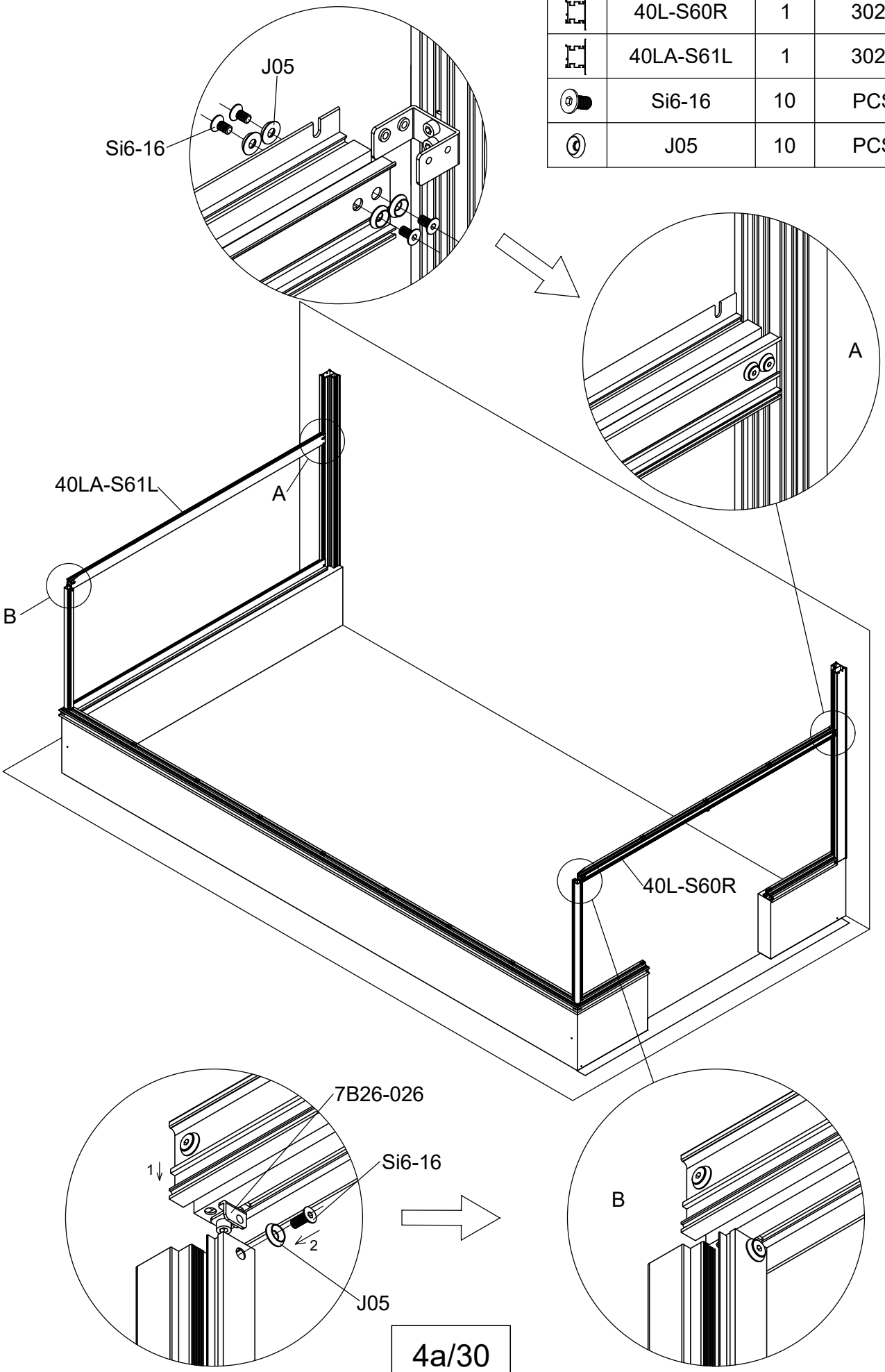

Part	NO.	QTY.	Length(MM)
	Si6-16	2	PCS
	J05	2	PCS
	L06	2	1400

Part	Product	NO.	Length(MM)	QTY.	Code
	3181	40L-Y62-4-11	3134	1	A003
	3182	40L-Y62-5-11	3885		
	3183	40L-Y62-6-11	4636		
	3184	40L-Y62-7-11	5387		
	3185	40L-Y62-8-11	6138		

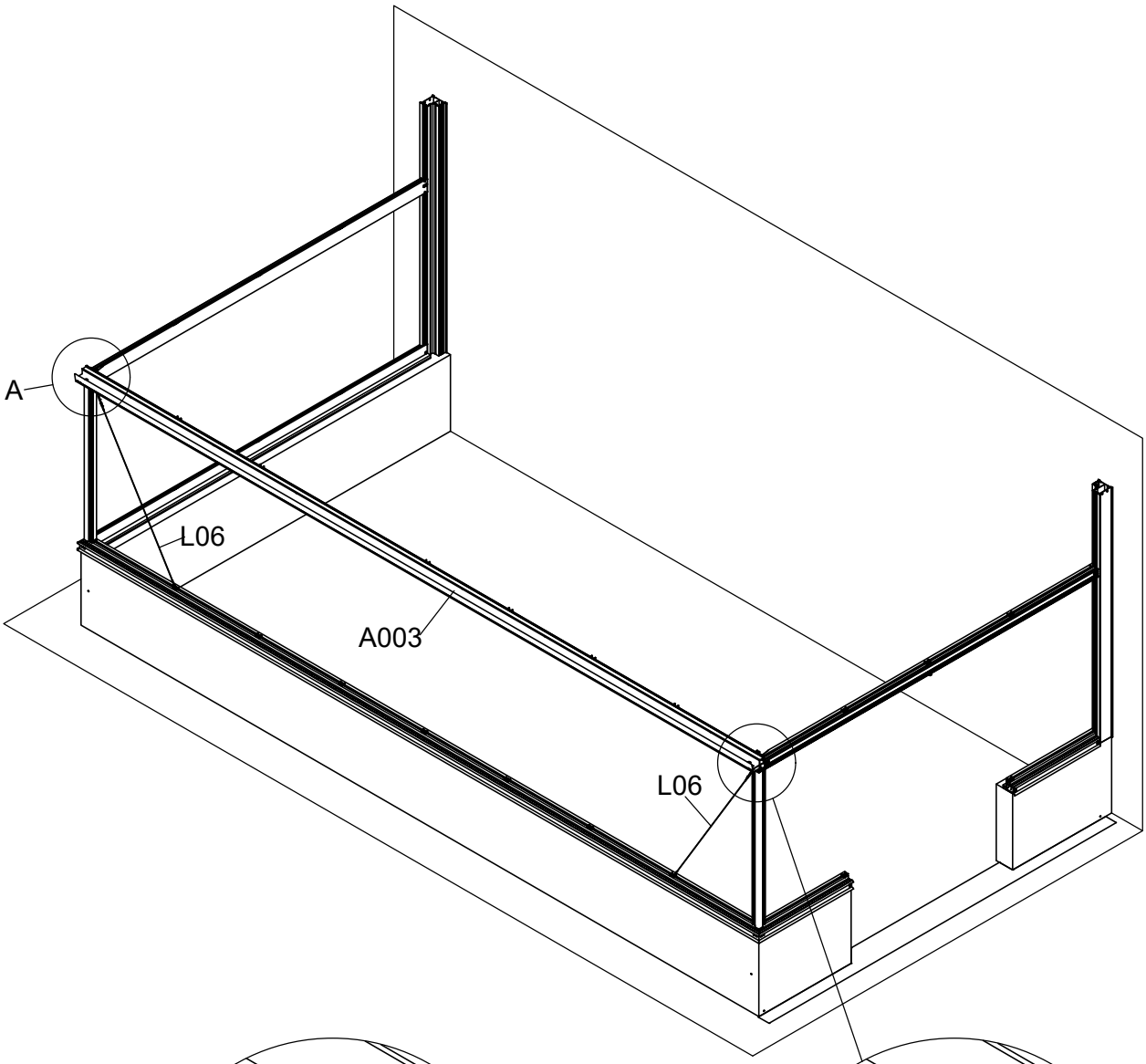

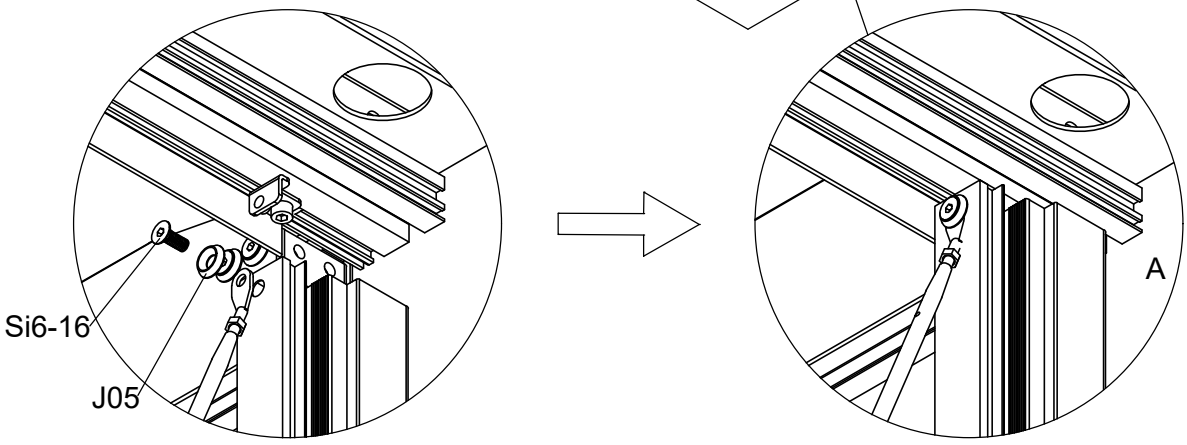

Part	NO.	QTY.	Length(MM)
	7B26-077	2	PCS
	M8-20	4	PCS
	7C28-004	4	PCS

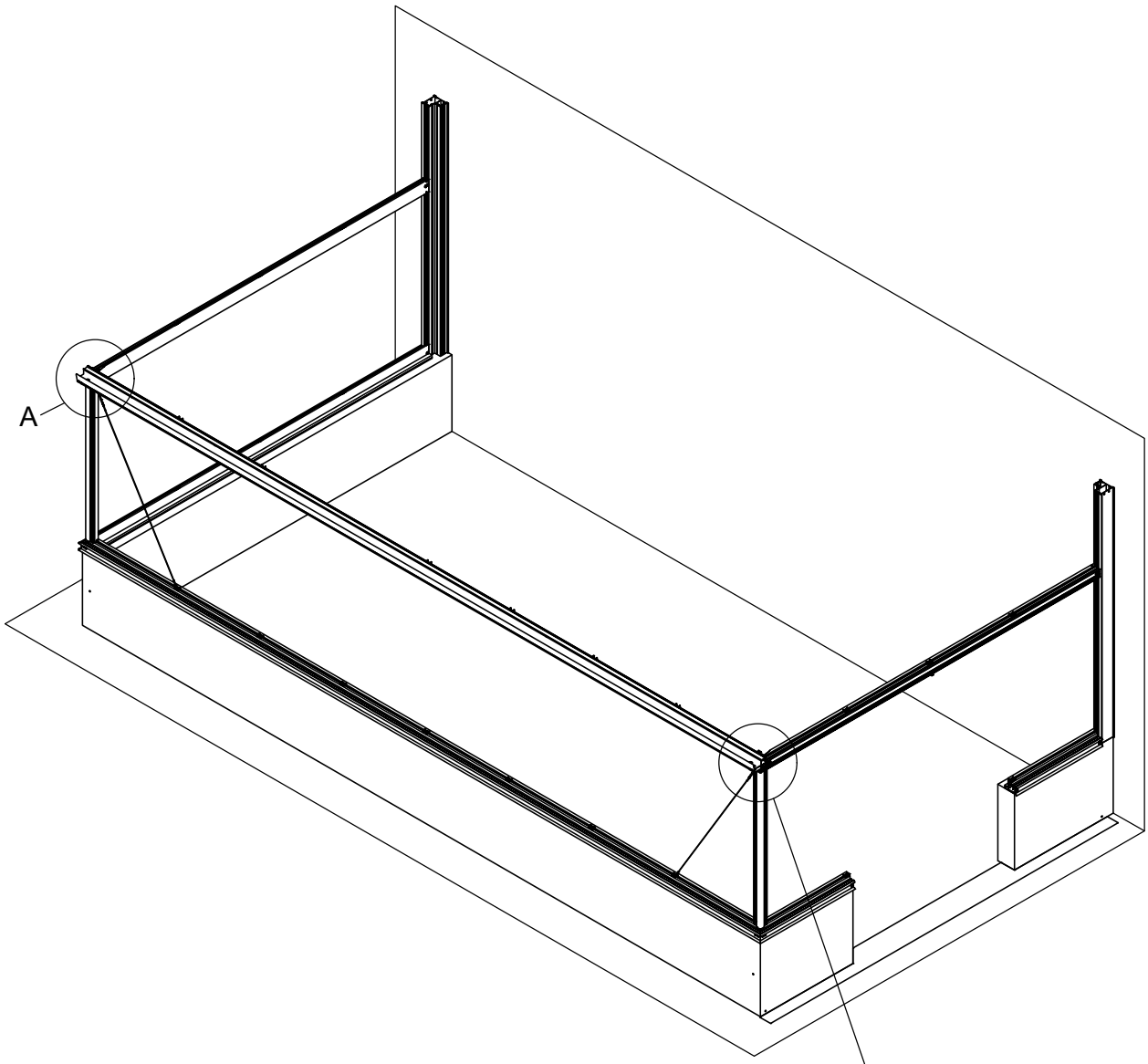

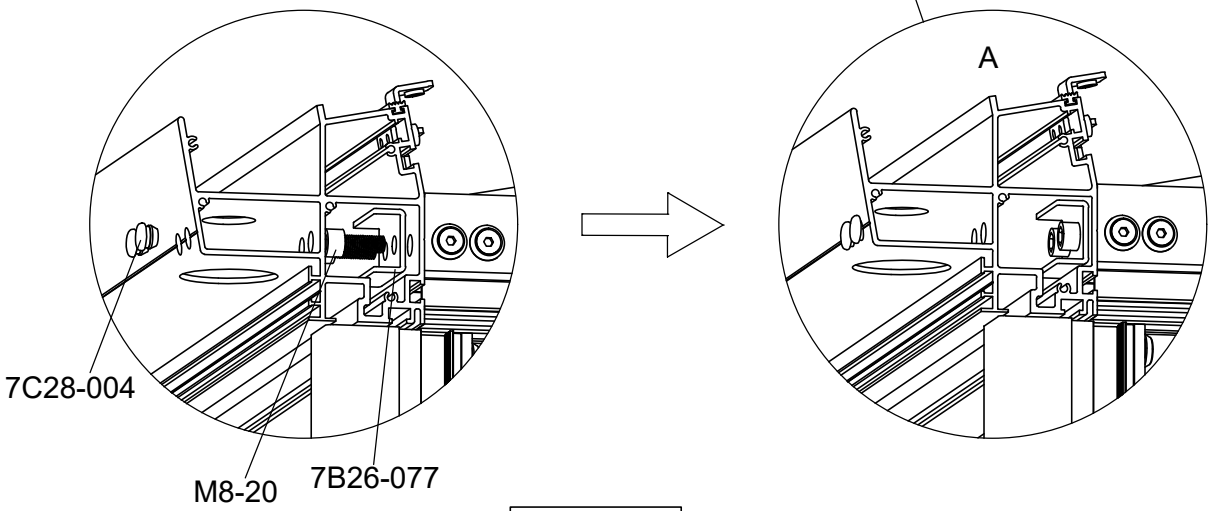

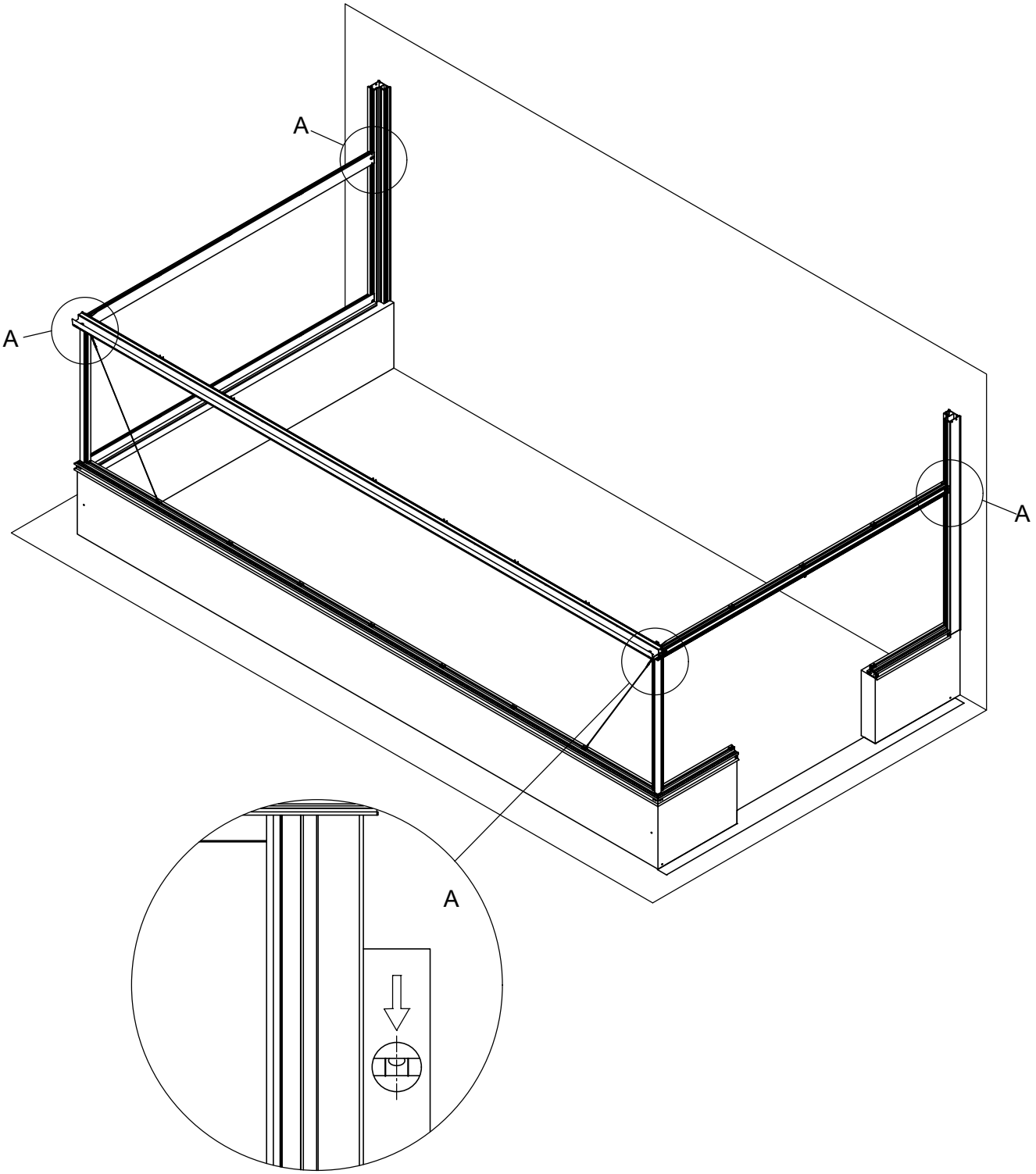
A
A
A
A

Part	Product	NO.	Length(MM)	QTY.	Code
	3181	40LA-Y63-4-11	3157	1	A004
	3182	40LA-Y63-5-11	3908		
	3183	40LA-Y63-6-11	4659		
	3184	40LA-Y63-7-11	5410		
	3185	40LA-Y63-8-11	6161		

Part	NO.	QTY.					Length(MM)
		3181	3182	3183	3184	3185	
	40X-P80E-B	1	2	2	3	3	801
	T07	2	4	4	6	6	PCS

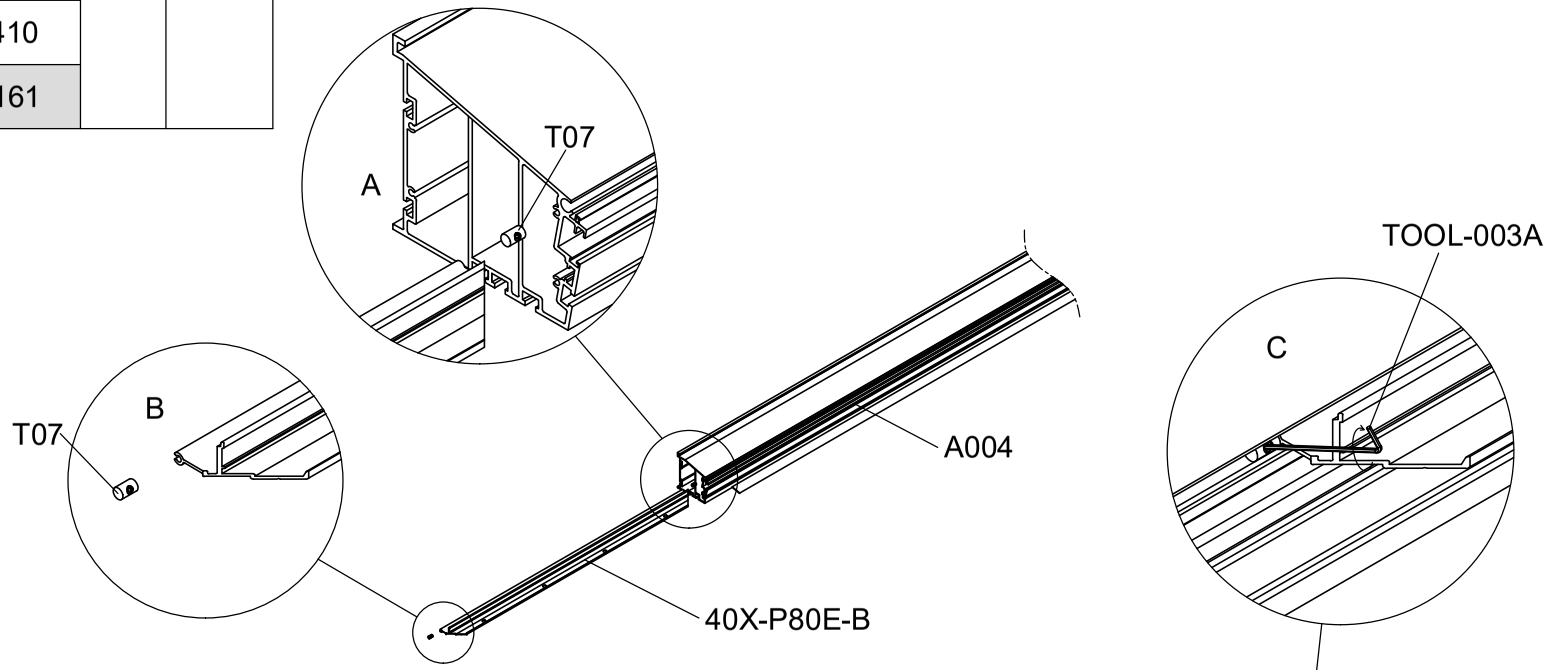

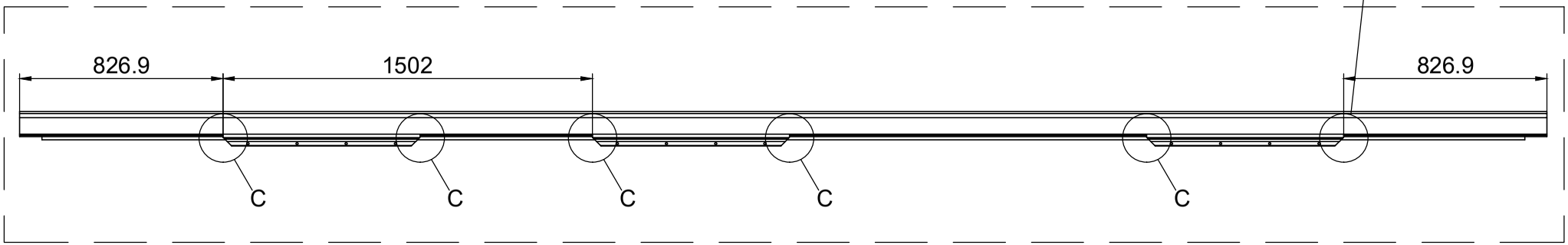

Part	NO.	QTY.	Length(MM)
	Si6-25	6	PCS
	J05	6	PCS

Part	Product	NO.	Length(MM)	QTY.	Code
	3181	40LA-Y63-4-11	3157	1	A004
	3182	40LA-Y63-5-11	3908		
	3183	40LA-Y63-6-11	4659		
	3184	40LA-Y63-7-11	5410		
	3185	40LA-Y63-8-11	6161		

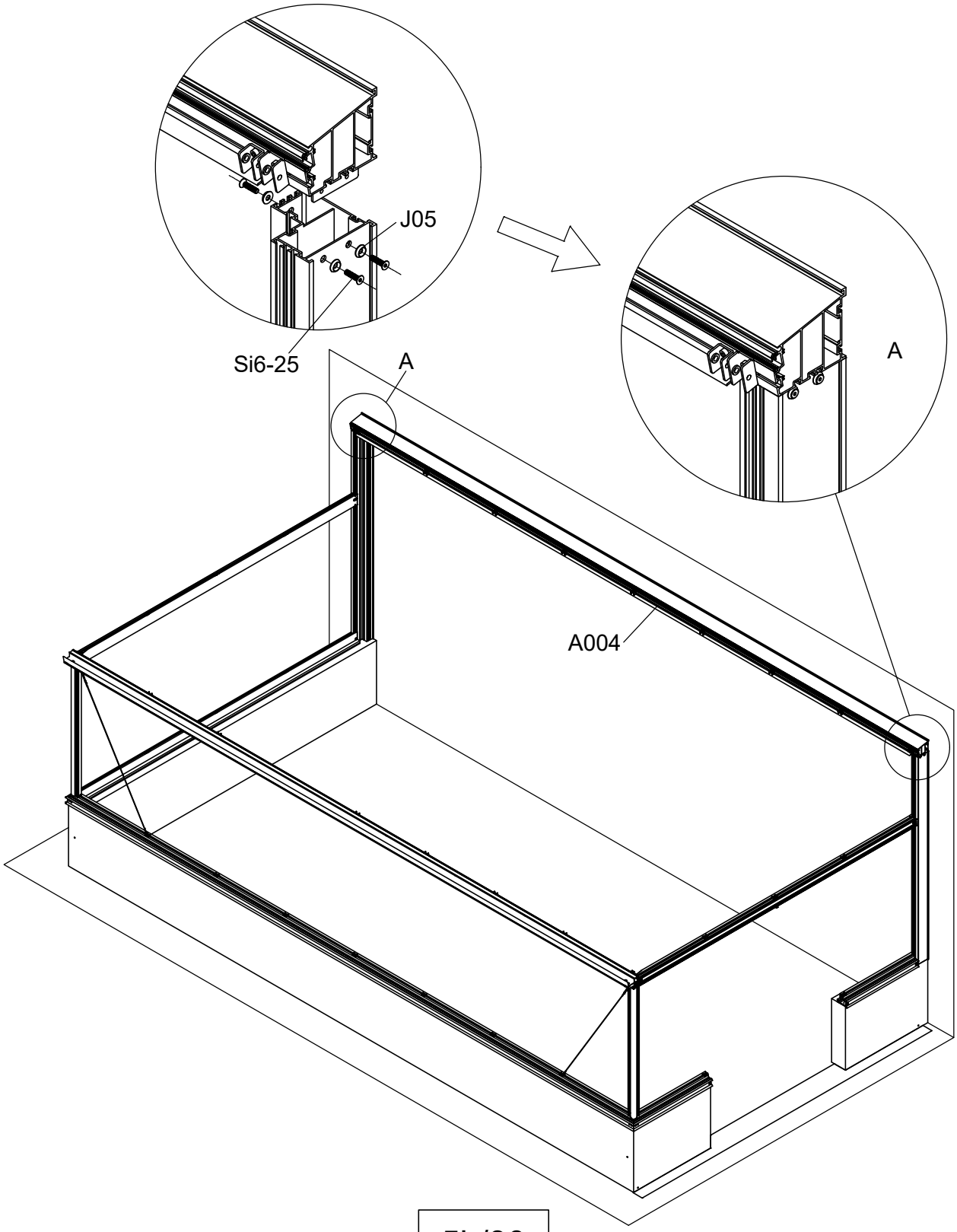

Part	NO.	QTY.					Length(MM)	
		3181	3182	3183	3184	3185		
	PSJ10-80	18	20	20	22	22	PCS	For Concrete
	DQ8-16	18	20	20	22	22	PCS	For Concrete/For Wood
	SW8-80	18	20	20	22	22	PCS	For Concrete/For Wood

Part	Product	NO.	Length(MM)	QTY.	Code
	3181	40LA-Y26A-4	3157	1	A005
	3182	40LA-Y26A-5	3908		
	3183	40LA-Y26A-6	4659		
	3184	40LA-Y26A-7	5410		
	3185	40LA-Y26A-8	6161		
	3181	40LA-Y26B-4	2899	1	A006
	3182	40LA-Y26B-5	3650		
	3183	40LA-Y26B-6	4401		
	3184	40LA-Y26B-7	5152		
	3185	40LA-Y26B-8	5903		

Part	NO.	QTY.	Length(MM)
	40LA-Y25A-11	2	1960
	40LA-Y25B-11	2	1911

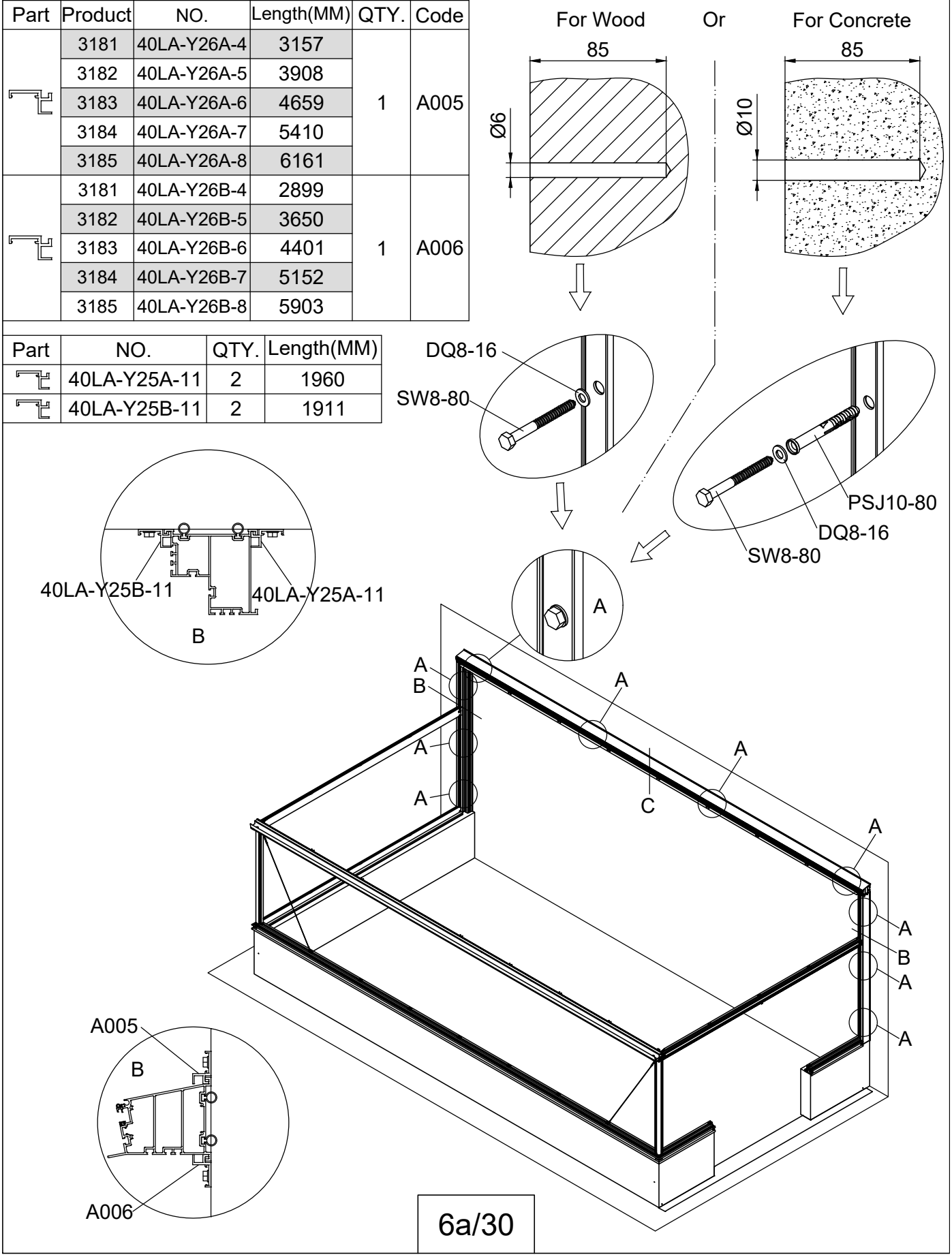

Part	NO.	QTY.	Length(MM)
	40LA-Y27A-11	2	1960
	40LA-Y27B-11	2	1911

Part	Product	NO.	Length(MM)	QTY.	Code
	3181	40LA-Y28A-4	3157	1	A007
	3182	40LA-Y28A-5	3908		
	3183	40LA-Y28A-6	4659		
	3184	40LA-Y28A-7	5410		
	3185	40LA-Y28A-8	6161		
	3181	40LA-Y28B-4	2917	1	A008
	3182	40LA-Y28B-5	3668		
	3183	40LA-Y28B-6	4419		
	3184	40LA-Y28B-7	5170		
	3185	40LA-Y28B-8	5921		

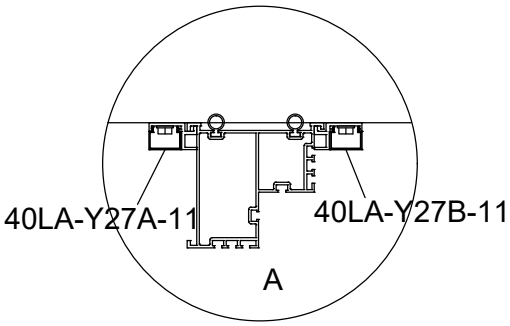

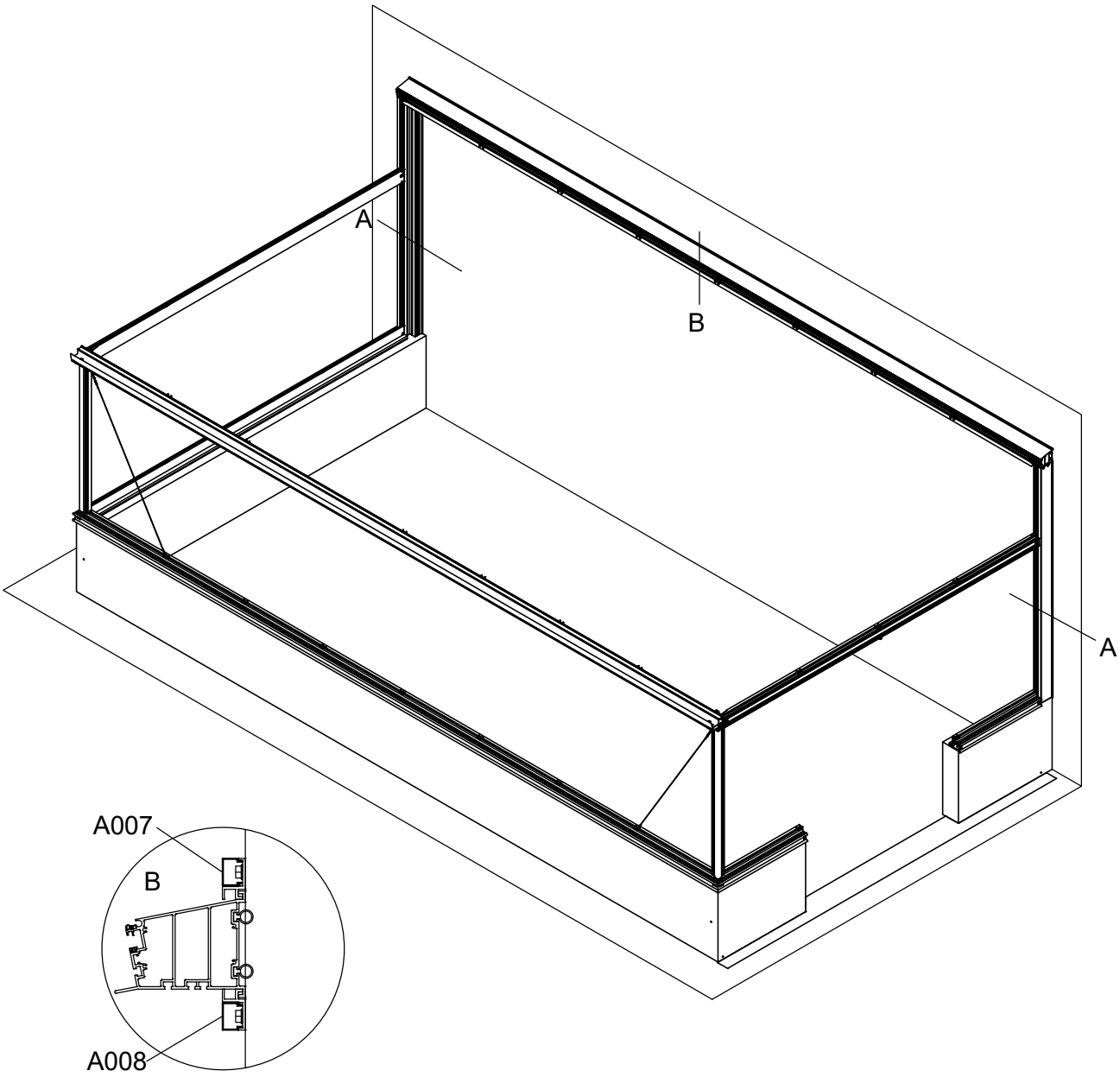

Part	NO.	QTY.	Length(MM)
	7C26-031	8	PCS

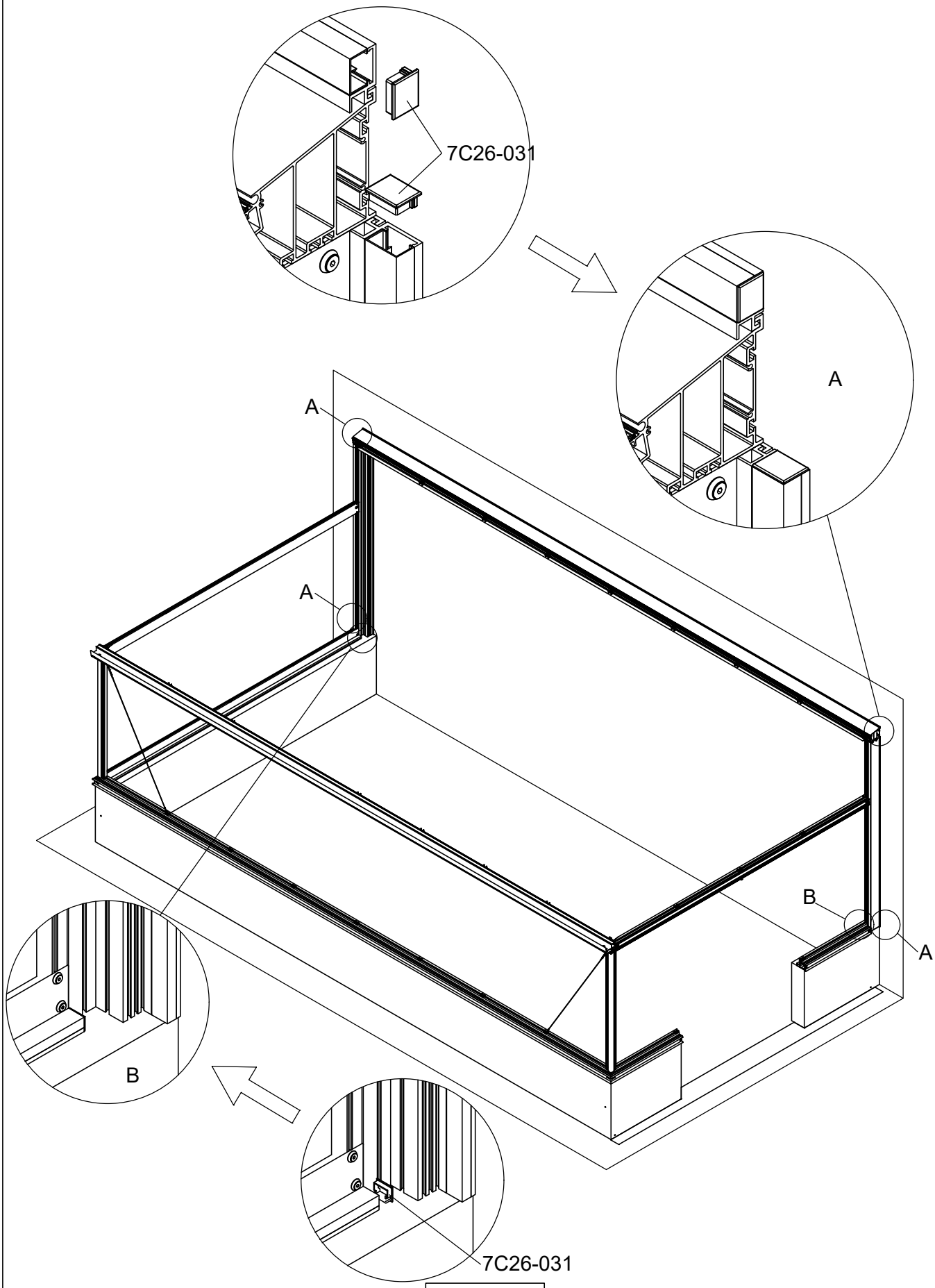

If you have chosen Side Windows, please assemble them from this step.
Please refer to the Side Window Instructions Page "7W1A-V3S 6/16 - 16/16".

Om du har valt sidofönster ska du montera dem från och med det här steget.
Se sidan med instruktioner för sidofönster "7W1A-V3S 6/16 - 16/16".

Hvis du har valgt sidevinduer, skal du montere dem fra dette trin og fremefter.
Se side 7W1A-V3S 6/16 - 16/16 i vejledningen til sidevinduer.

Hvis du har valgt Sidevinduer, vennligst sett dem sammen fra dette trinnet.
Vennligst se sidevindusinstruksjonene "7W1A-V3S 6/16 - 16/16".

Jos olet valinnut sivuikkunat, kokoa ne tästä vaiheesta alkaen.
Katso sivuikkunoiden ohjeet sivulta "7W1A-V3S 6/16 - 16/16".

Wenn Sie sich für Seitenfenster entschieden haben, montieren Sie diese bitte ab diesem Schritt.
Bitte beachten Sie die Anleitung für die Seitenfenster auf der Seite "7W1A-V3S 6/16 - 16/16".

Green Room®
BY WILLAB GARDEN

SH7W1A-V3S

If the Side Window is assembled on a new greenroom, please start with Page 6/16.
If the Side Window is added to an existing greenroom, please start with Page 1/16.

Vid montage på ett nytt Green Room, börja på sidan 6/16.
Vid eftermontage på ett befintligt Green Room börjar du på sidan 1/16.

Hvis sidevinduet monteres på et nyt Green Room, skal du starte på side 6/16.
Ved eftermontering på et eksisterende Green Room, skal du starte på side 1/16.

Hvis sidevinduet er montert på et nytt Green Room, start på side 6/16.
Ved ettermontering til et eksisterende Green Room, start på side 1/16.

Jos sivuikkuna asennetaan uuteen Green Room, aloita sivulta 6/16.
Jos sivuikkuna lisätään olemassa olevaan Green Room, aloita sivulta 1/16.

Wenn das Seitenfenster in einem neuen Green Room, montiert wird, beginnen Sie bitte mit Seite 6/16.
Wenn das Seitenfenster in einen bestehenden Green Room, eingebaut wird, beginnen Sie bitte mit Seite 1/16.

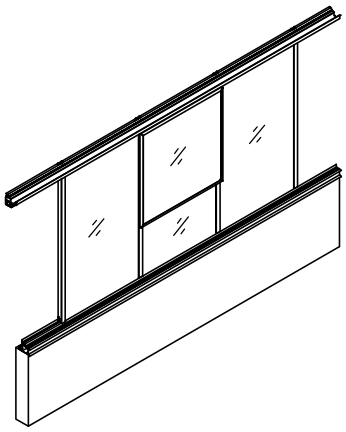

Disassemble this part.
Avmontera fästet från profilen på långsidan.
Afmonter beslaget fra profilen på langsiden.
Demonter festet fra profilen på langsiden.
Irrota profiilin pitkällä sivulla oleva kiinnike.
Demontieren Sie dieses Teil.

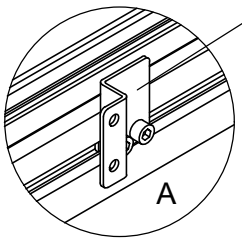

Disassemble this part.
Avmontera fästet från profilen på långsidan.
Afmonter beslaget fra profilen på langsiden.
Demonter festet fra profilen på langsiden.
Irrota profiilin pitkällä sivulla oleva kiinnike.
Demontieren Sie dieses Teil.

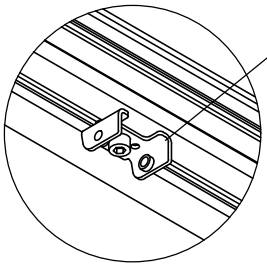

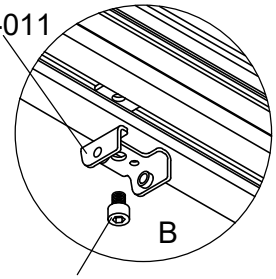

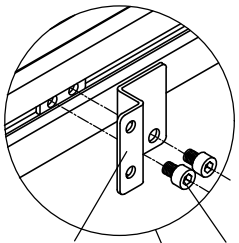

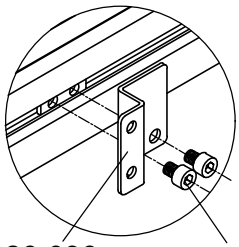

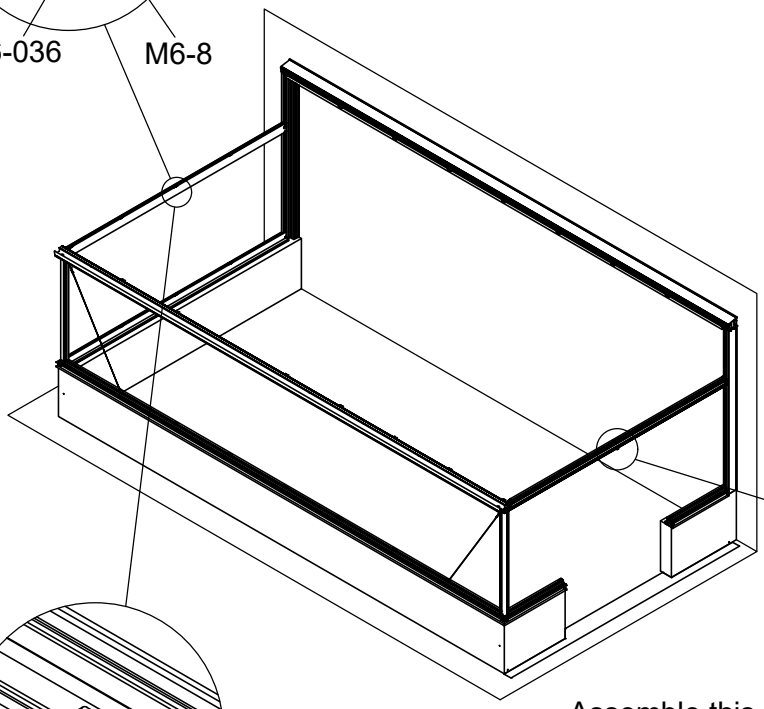

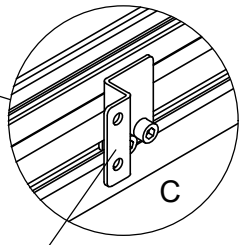

Assemble this part to the middle of the profiles.
Montera fästet i mitten av profilen.
Montere beslaget i midten af profilen.
Monter festet i midten av profilen.
Asenna kiinnike profiilin keskelle.
Montieren Sie dieses Teil in der Mitte der Profile.

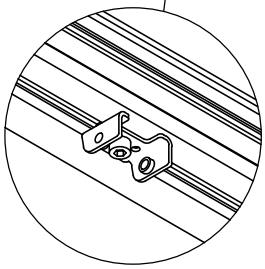

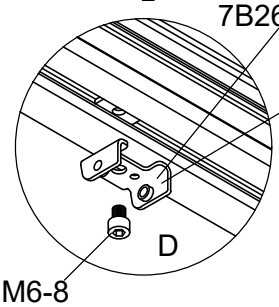

Assemble this part to the middle of the profiles.
Montera fästet i mitten av profilen.
Montere beslaget i midten af profilen.
Monter festet i midten av profilen.
Asenna kiinnike profiilin keskelle.
Montieren Sie dieses Teil in der Mitte der Profile.

Part	NO.	QTY.	Length(MM)
	40LA-Y30	2	1235
	Si6-12	4	PCS
	J05	4	PCS
	MF6	4	PCS

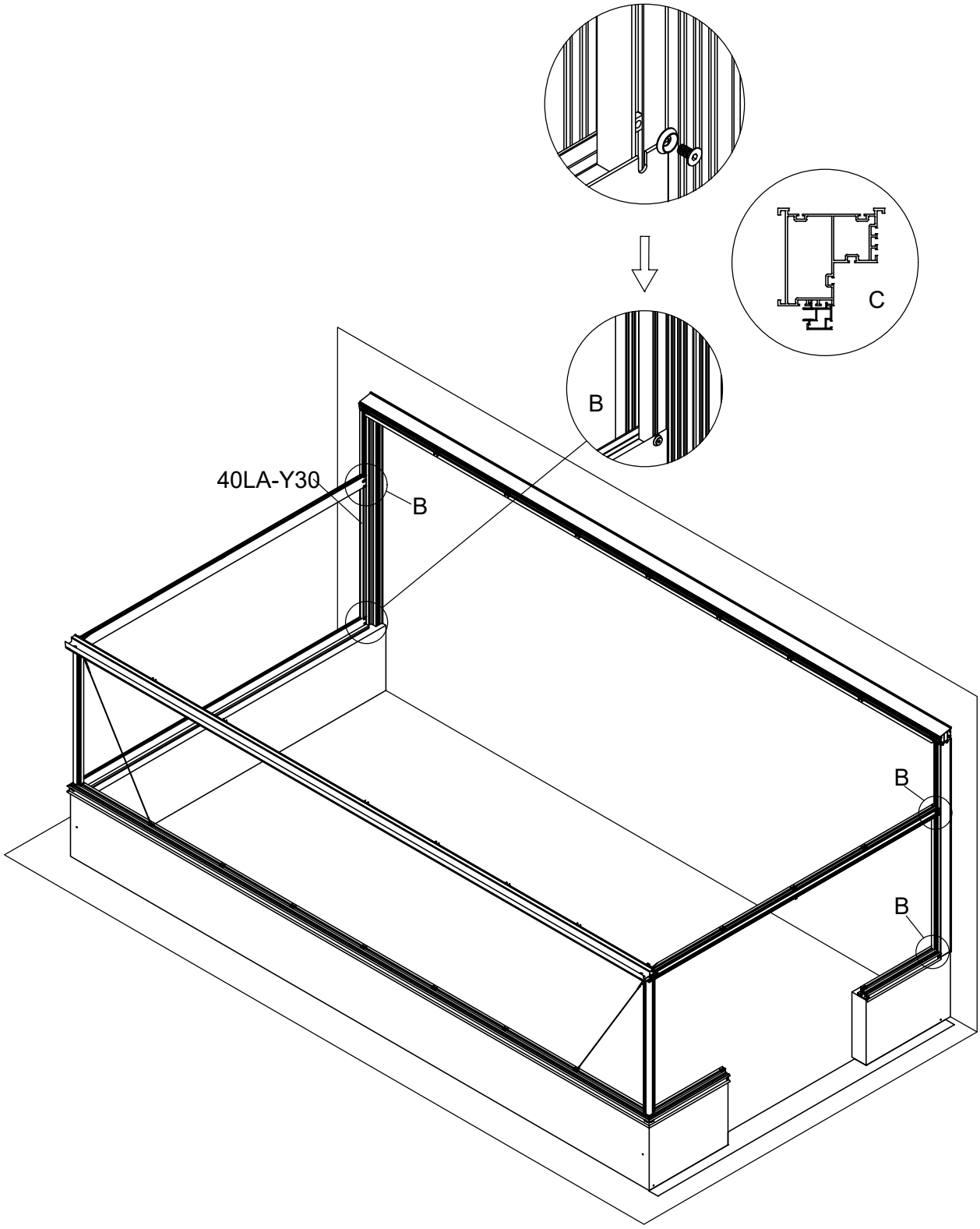

Part	NO.	QTY.	Length(MM)
	40A-Y30	7	1235
	Si6-16	20	PCS
	J05	20	PCS

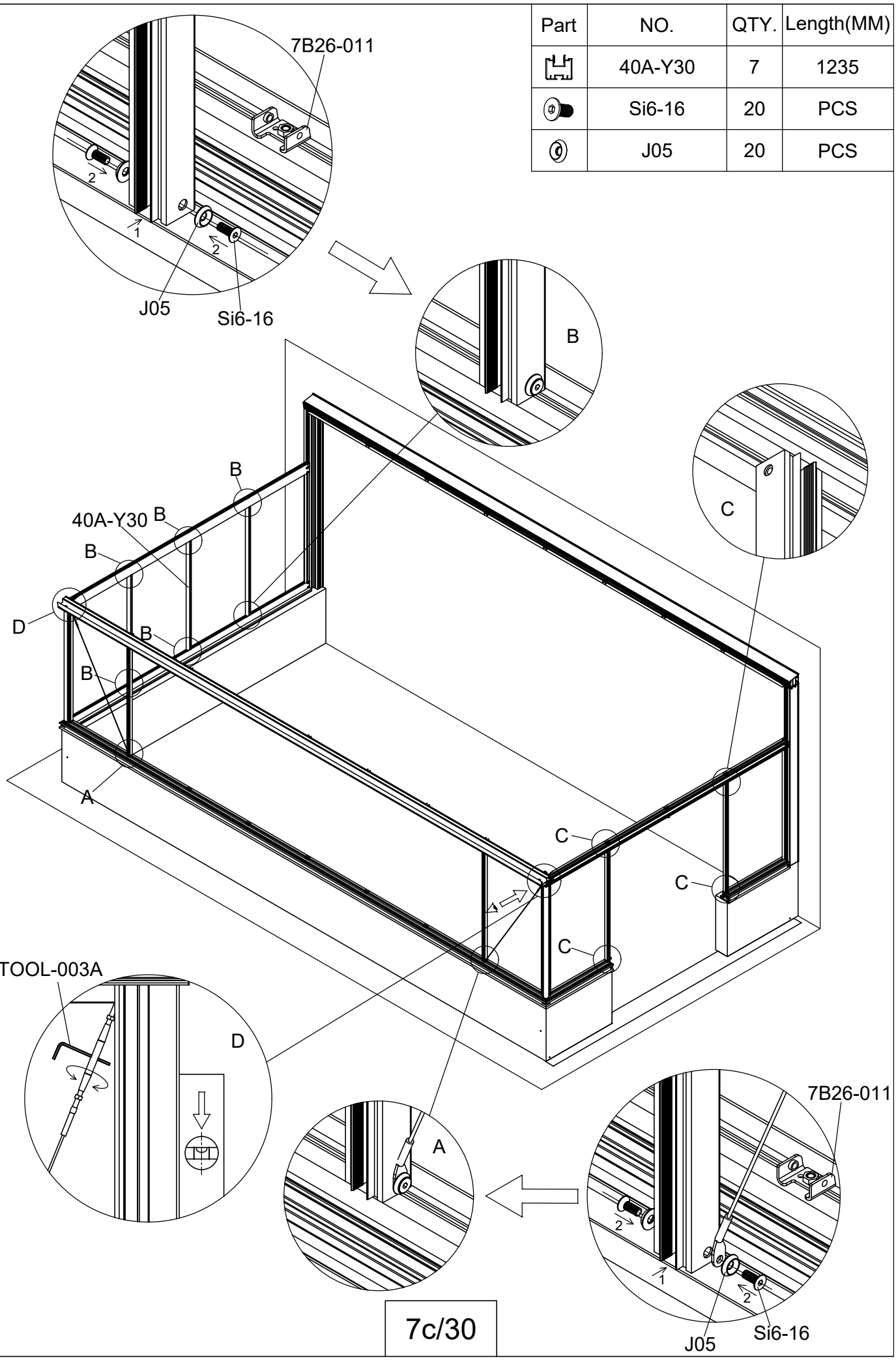

Part	NO.	QTY.					Length(MM)
		3181	3182	3183	3184	3185	
	40A-Y30	1	2	3	4	5	1235
	Si6-16	8	12	16	20	24	PCS
	J05	8	12	16	20	24	PCS

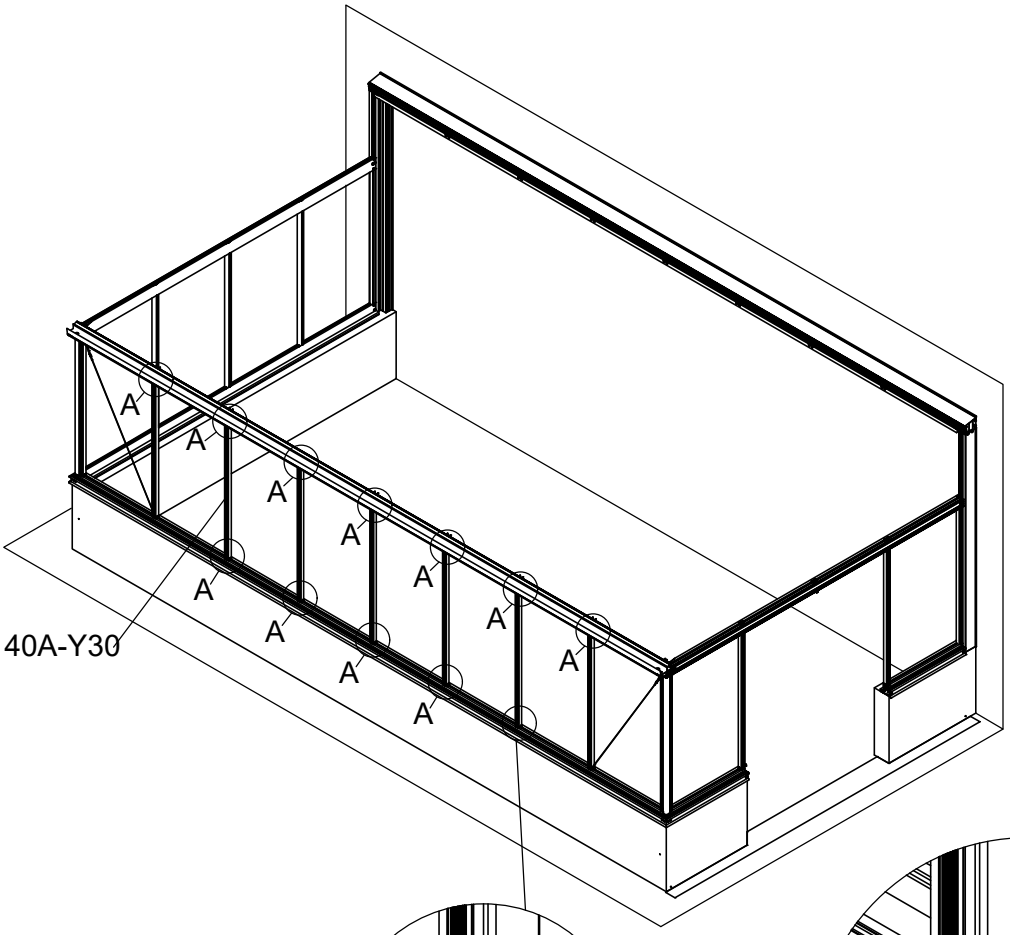

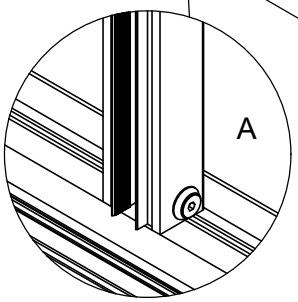

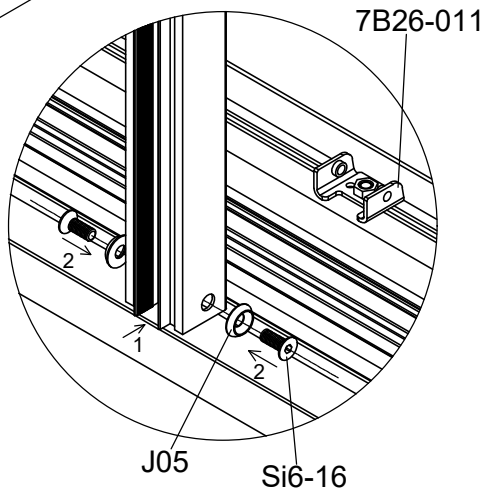

3181	3182	3183	3184	3185
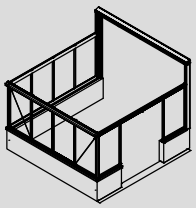	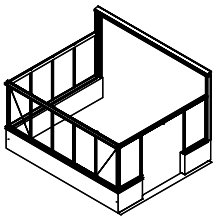	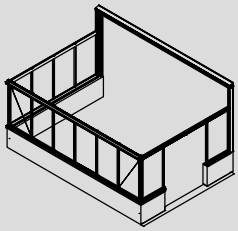	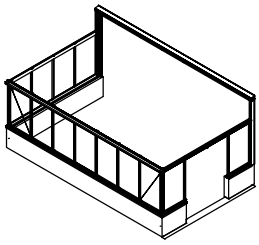	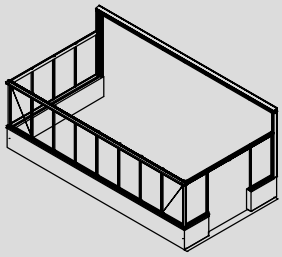

Part	NO.	QTY.	Length(MM)
	40L-Y31R-11	1	561
	40L-Y31L-11	1	561
	Si6-12	2	PCS
	J05	2	PCS
	MF6	2	PCS

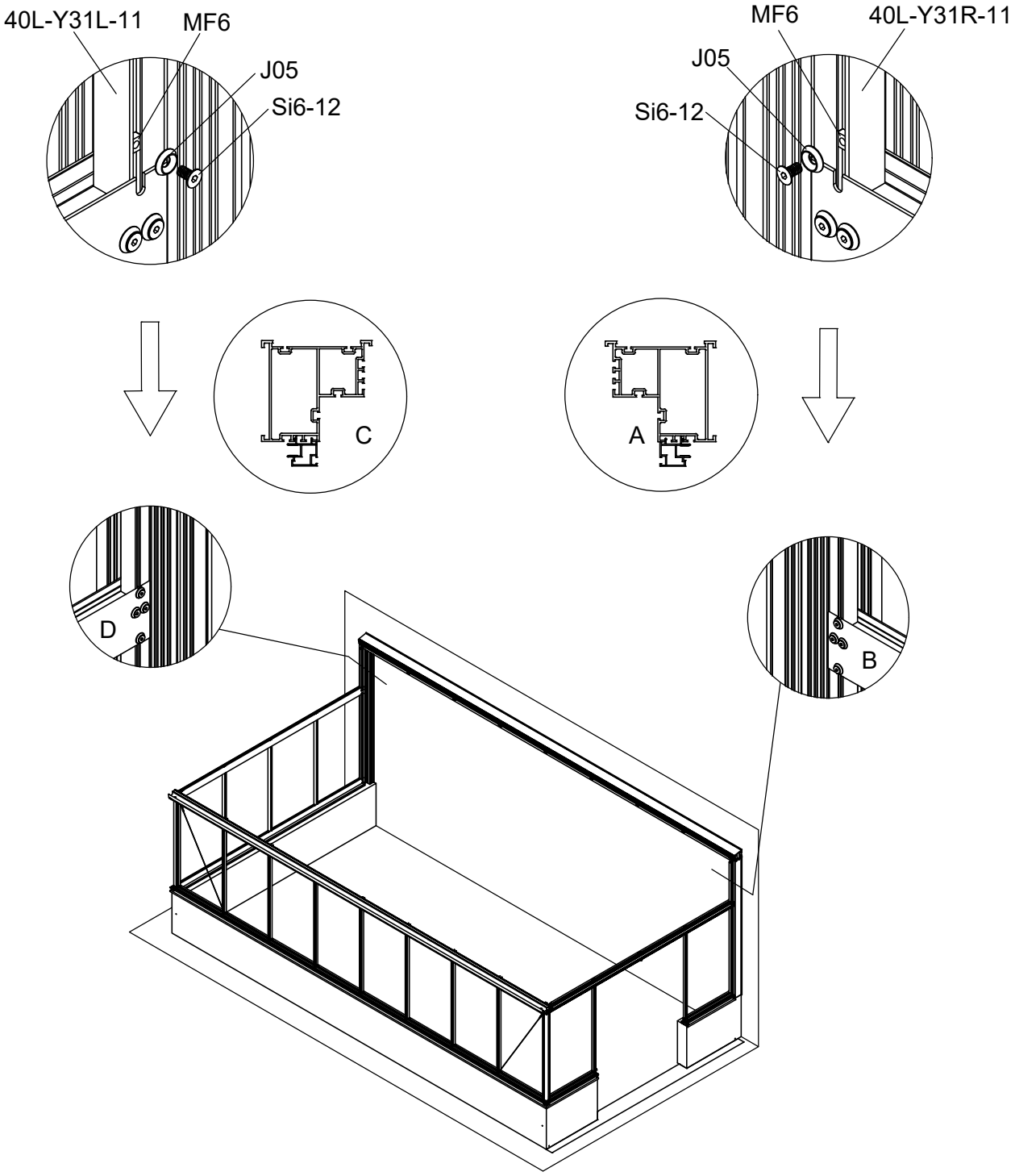

Part	NO.	QTY.	Length(MM)
	40X-Y31R-11A	1	124
	40X-Y31L-11A	1	124
	40X-Y31R-11B	1	270
	40X-Y31L-11B	1	270
	40X-Y31R-11C	1	416
	40X-Y31L-11C	1	416
	Si6-16	12	PCS
	J05	12	PCS

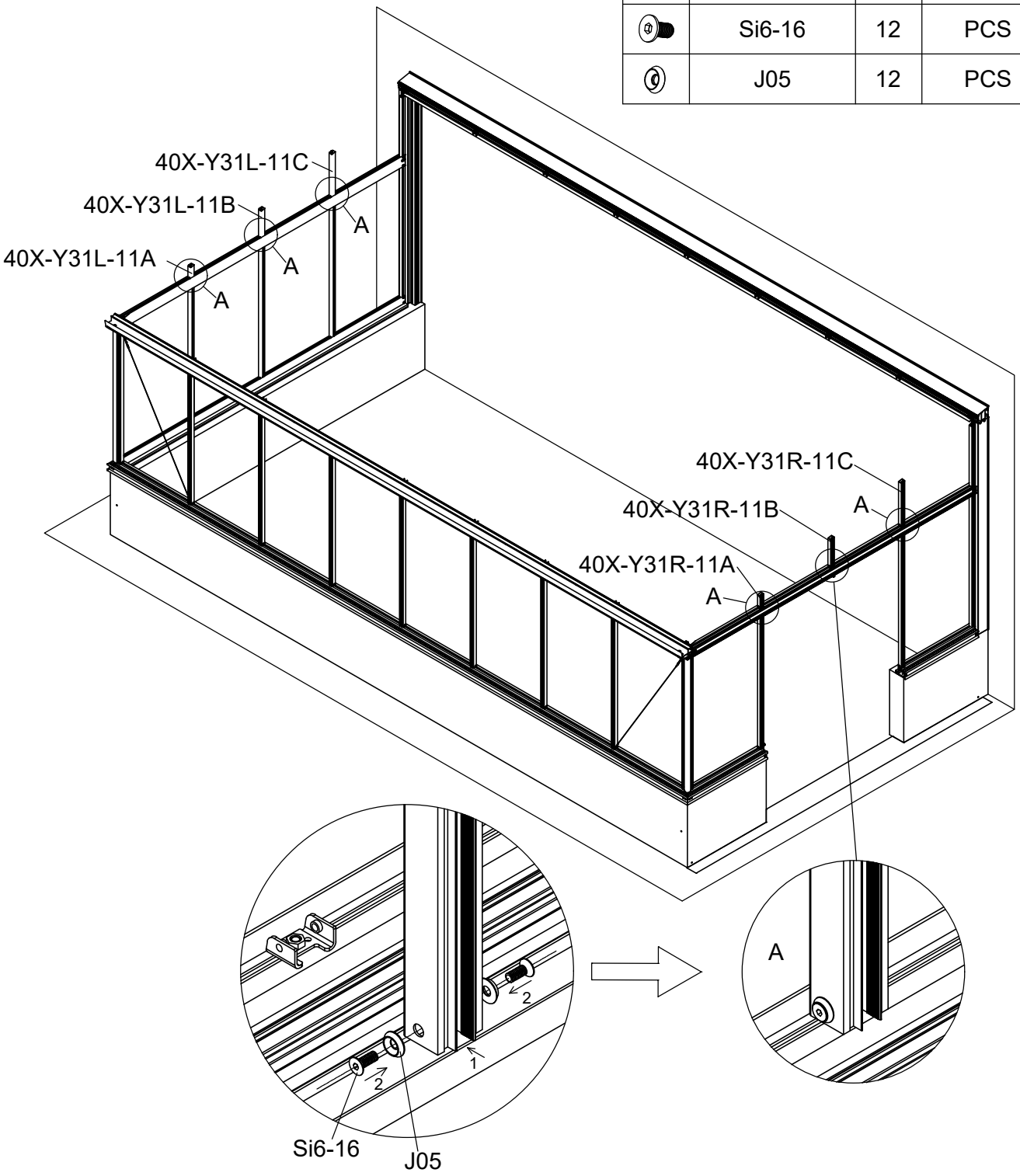

Part	NO.	QTY.	Length(MM)
	40L-Y21-11	1	3118
	40L-Y22-11	1	3118
	7B26-068	2	PCS
	Si8-25	4	PCS
	7B33-020	8	PCS
	Si8-16	4	PCS

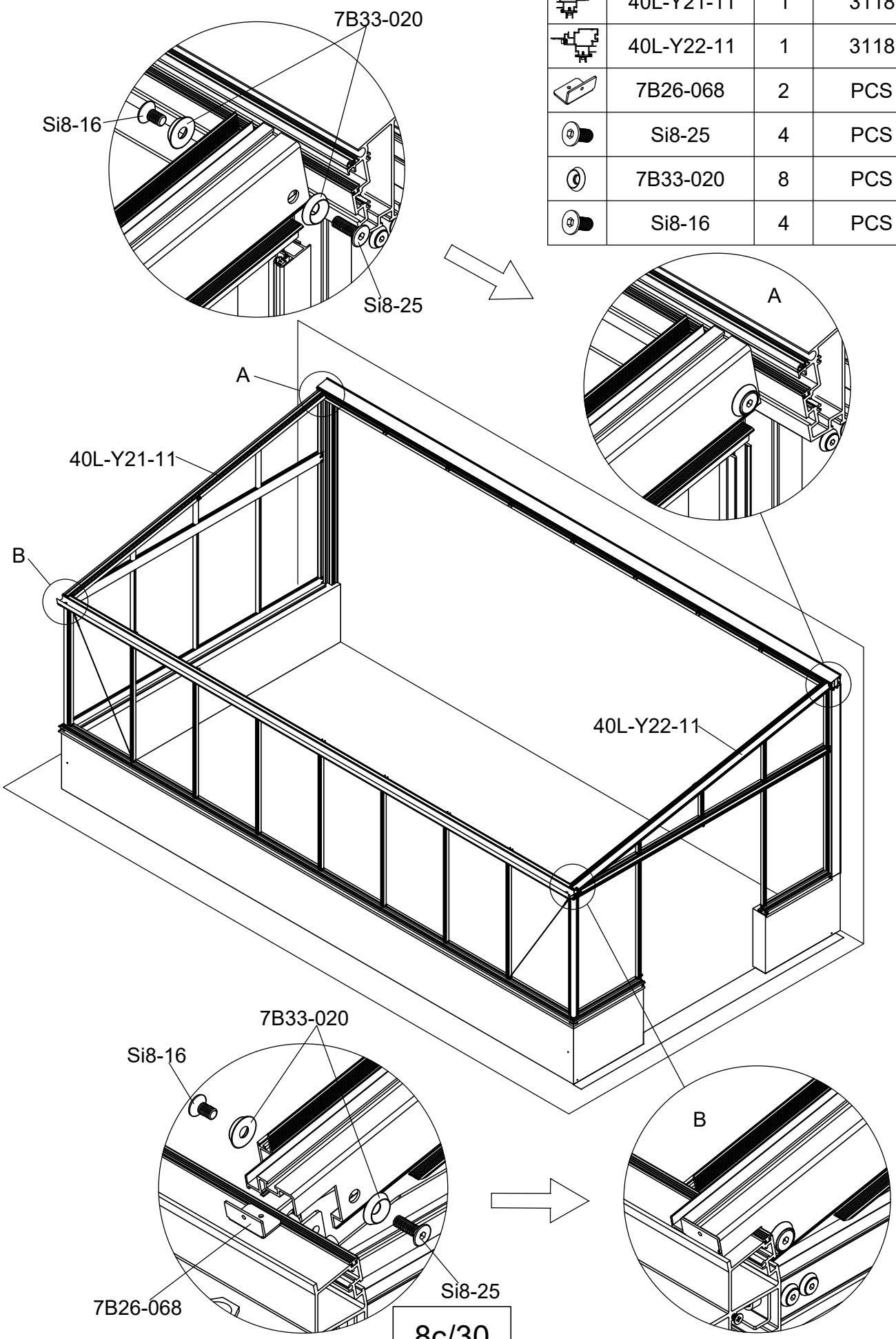

Part	NO.	QTY.	Length(MM)
	M6-8	12	PCS

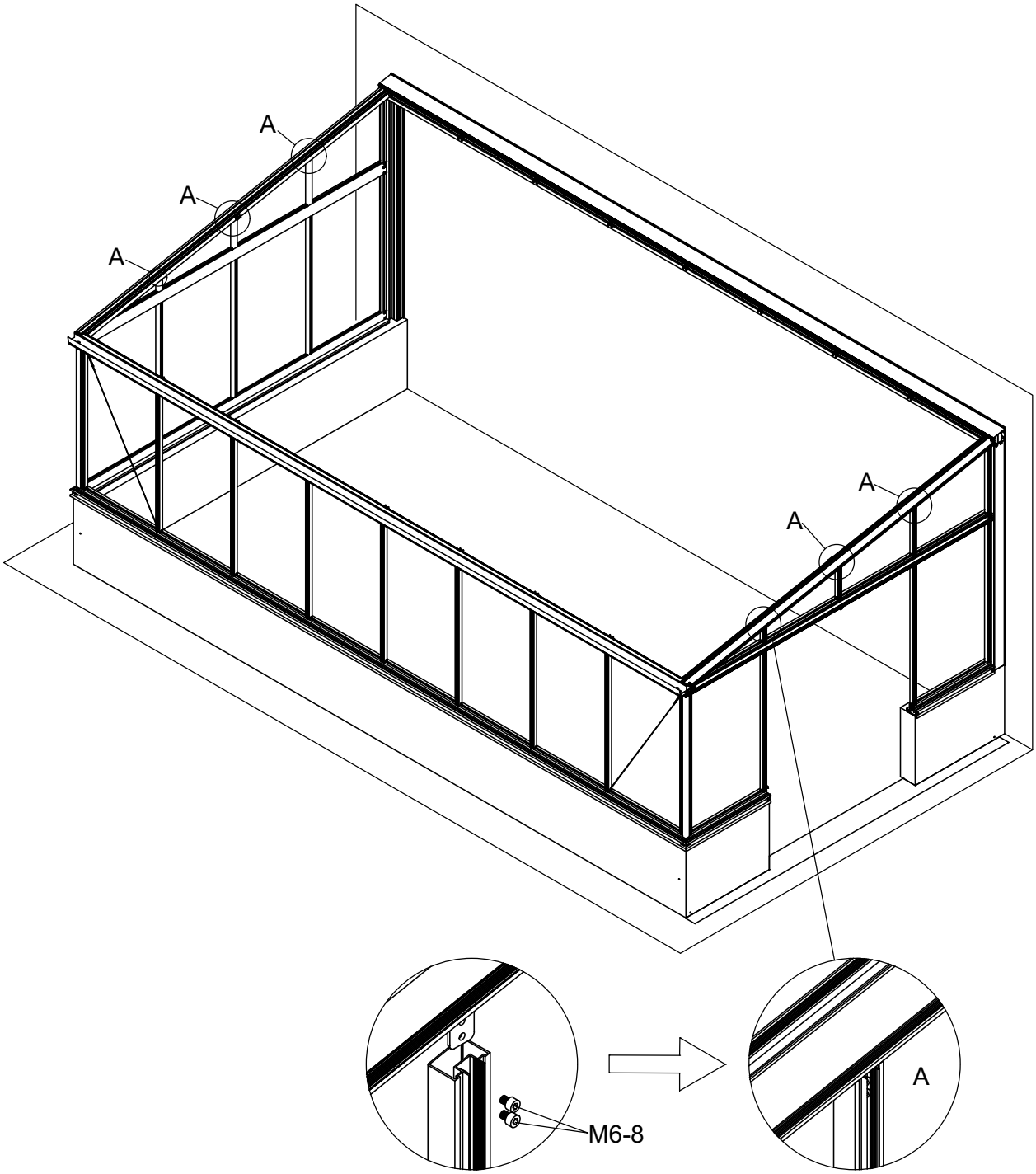

Part	NO.	QTY.					Length(MM)
		3181	3182	3183	3184	3185	
	40L-Y33R-11	1	2	2	3	3	3079
	40L-Y33L-11	1	2	2	3	3	3079
	40L-Y34A	1	2	2	3	3	713
	Si5-16	4	8	8	12	12	PCS
	7C28-004	4	8	8	12	12	PCS

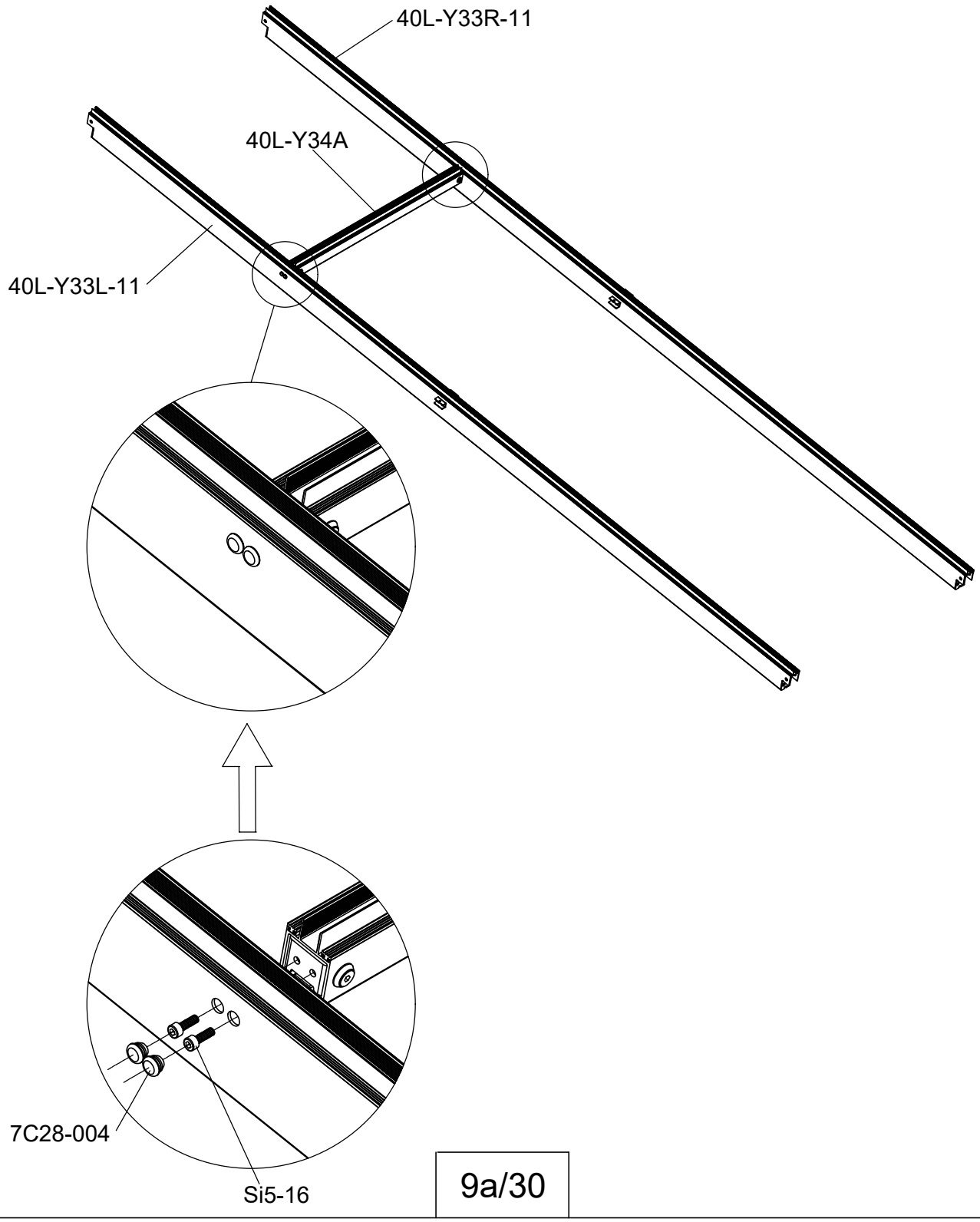

Part	NO.	QTY.					Length(MM)
		3181	3182	3183	3184	3185	
	40L-Y33A-11	1	0	1	0	1	3079

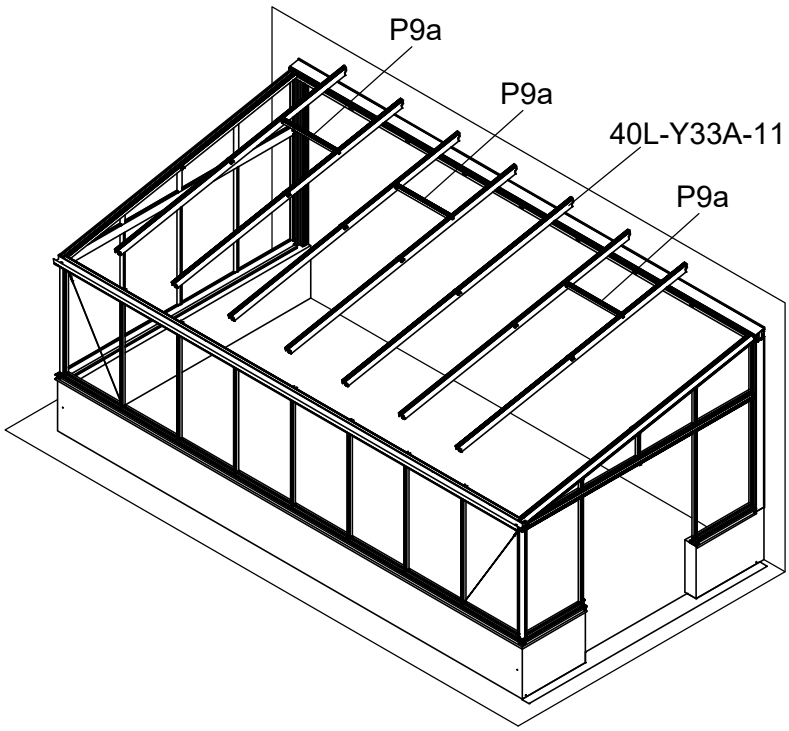

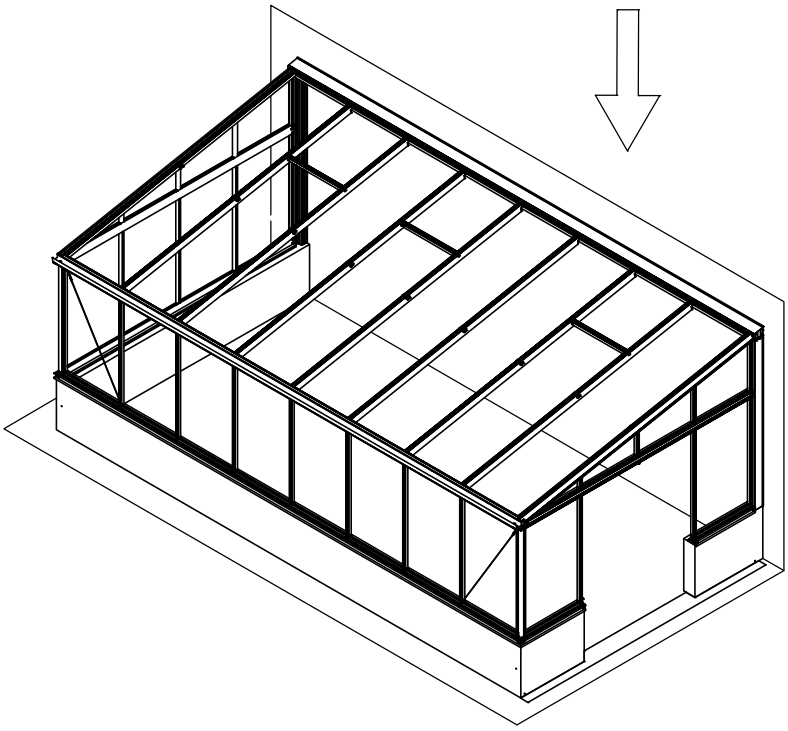

3181	3182	3183	3184	3185
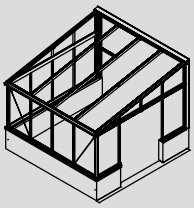	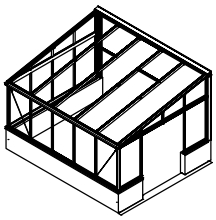	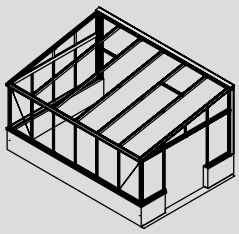	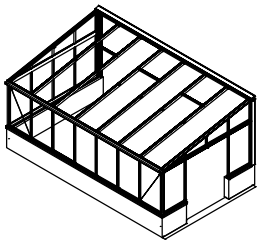	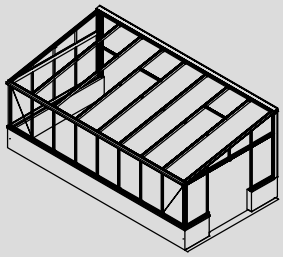

Part	NO.	QTY.					Length(MM)
		3181	3182	3183	3184	3185	
	Si6-16	12	16	20	24	28	PCS
	J05	12	16	20	24	28	PCS

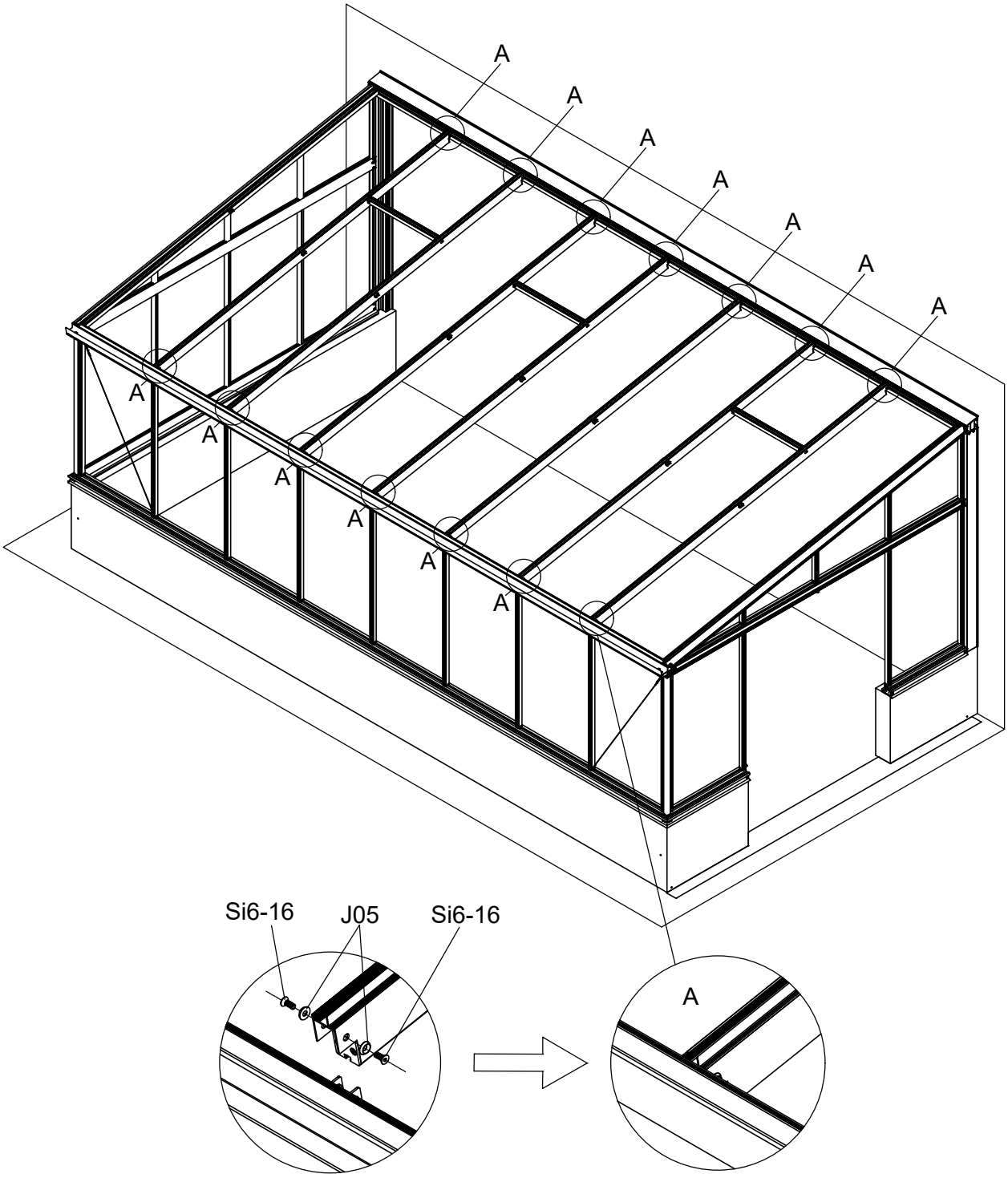

Part	NO.	QTY.					Length(MM)
		3181	3182	3183	3184	3185	
	40L-Y36N1	2	2	2	2	2	711
	40L-Y36N2	2	3	4	5	6	713
	M6-8	8	10	12	14	16	PCS
	J08	1					PCS

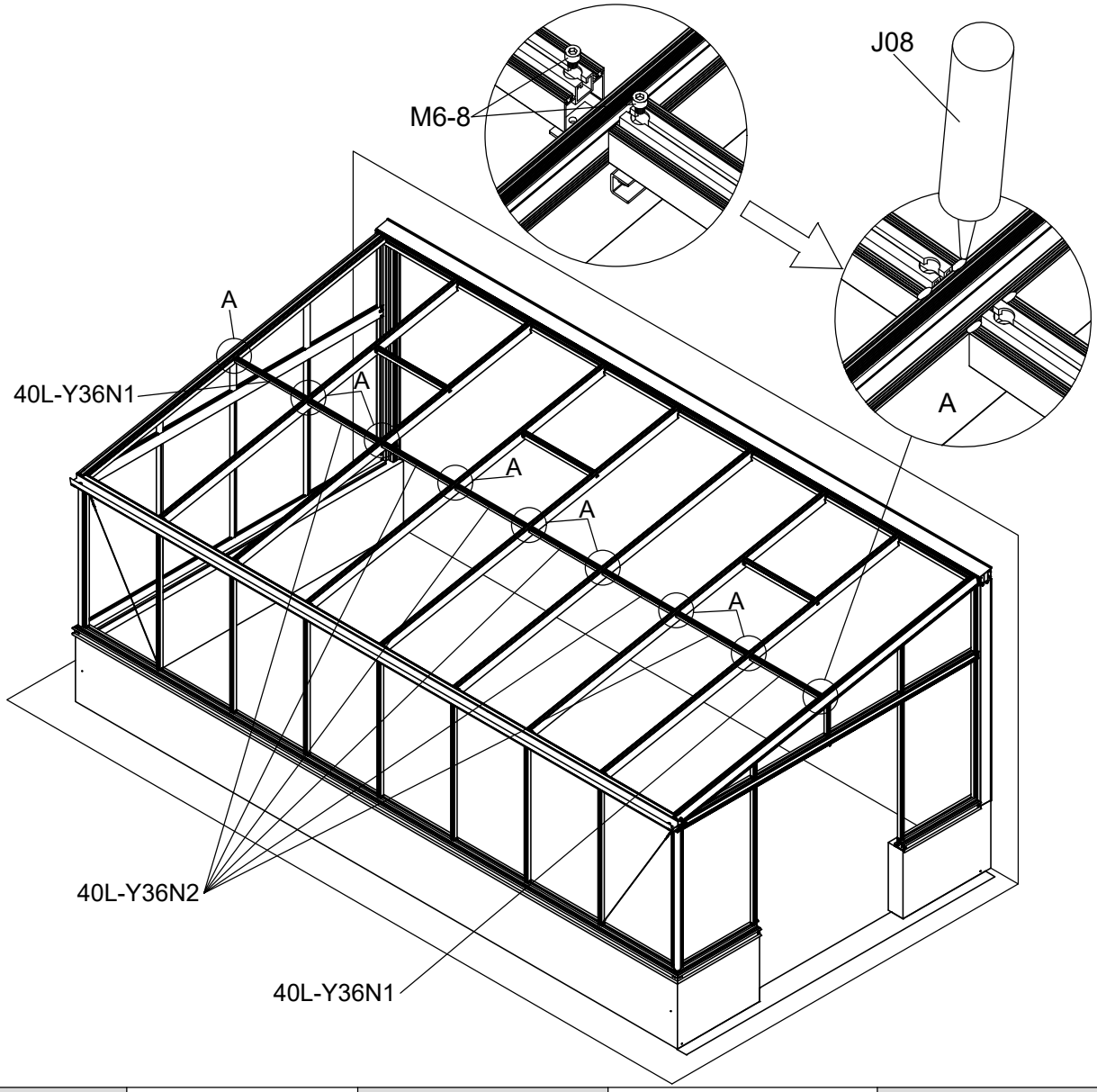

3181	3182	3183	3184	3185
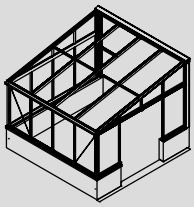	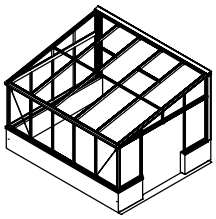	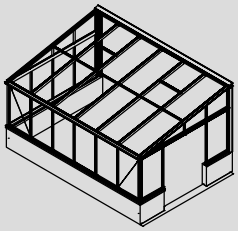	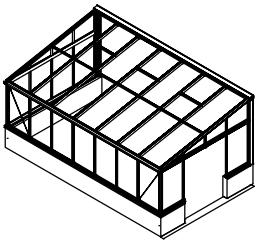	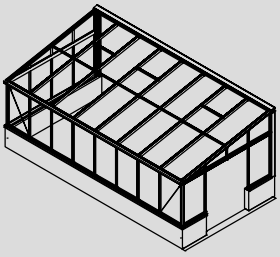

Part	NO.	QTY.					Length(MM)
		3181	3182	3183	3184	3185	
	730×1262	8	9	10	11	12	1262

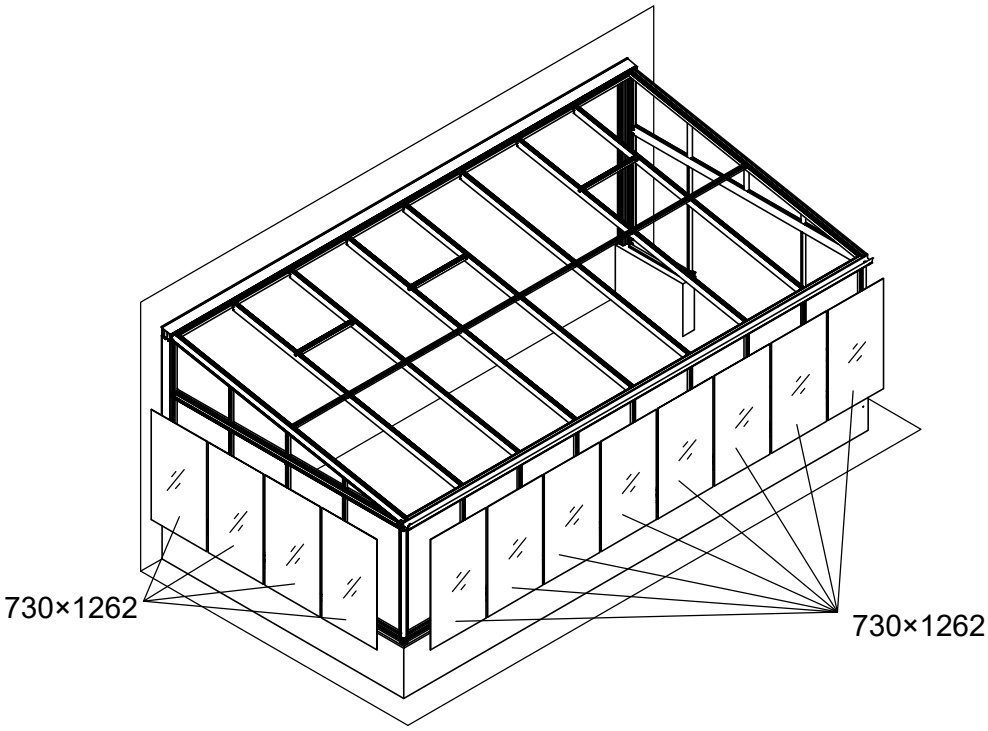

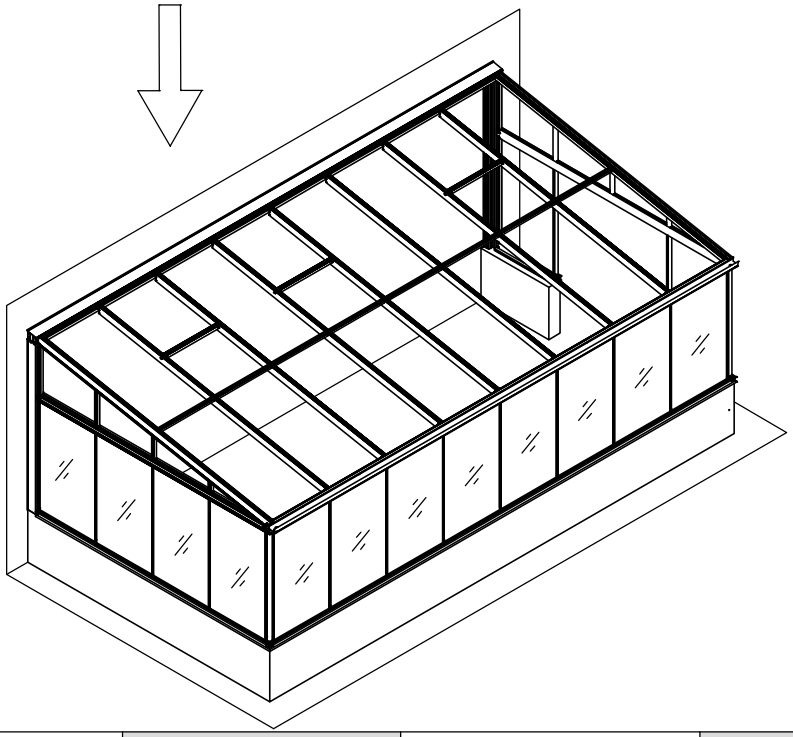

3181	3182	3183	3184	3185
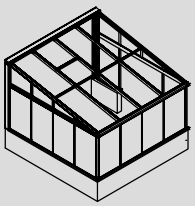	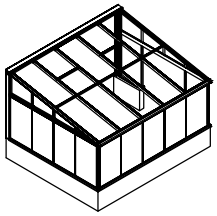	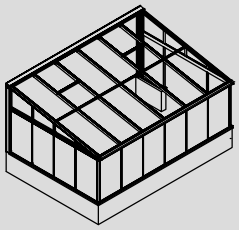	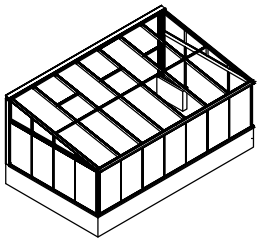	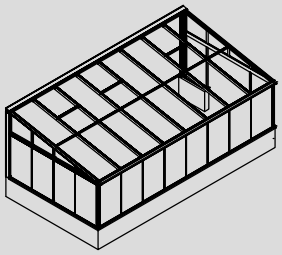

Part	NO.	QTY.	Length(MM)
⅏	730×1262	2	1262

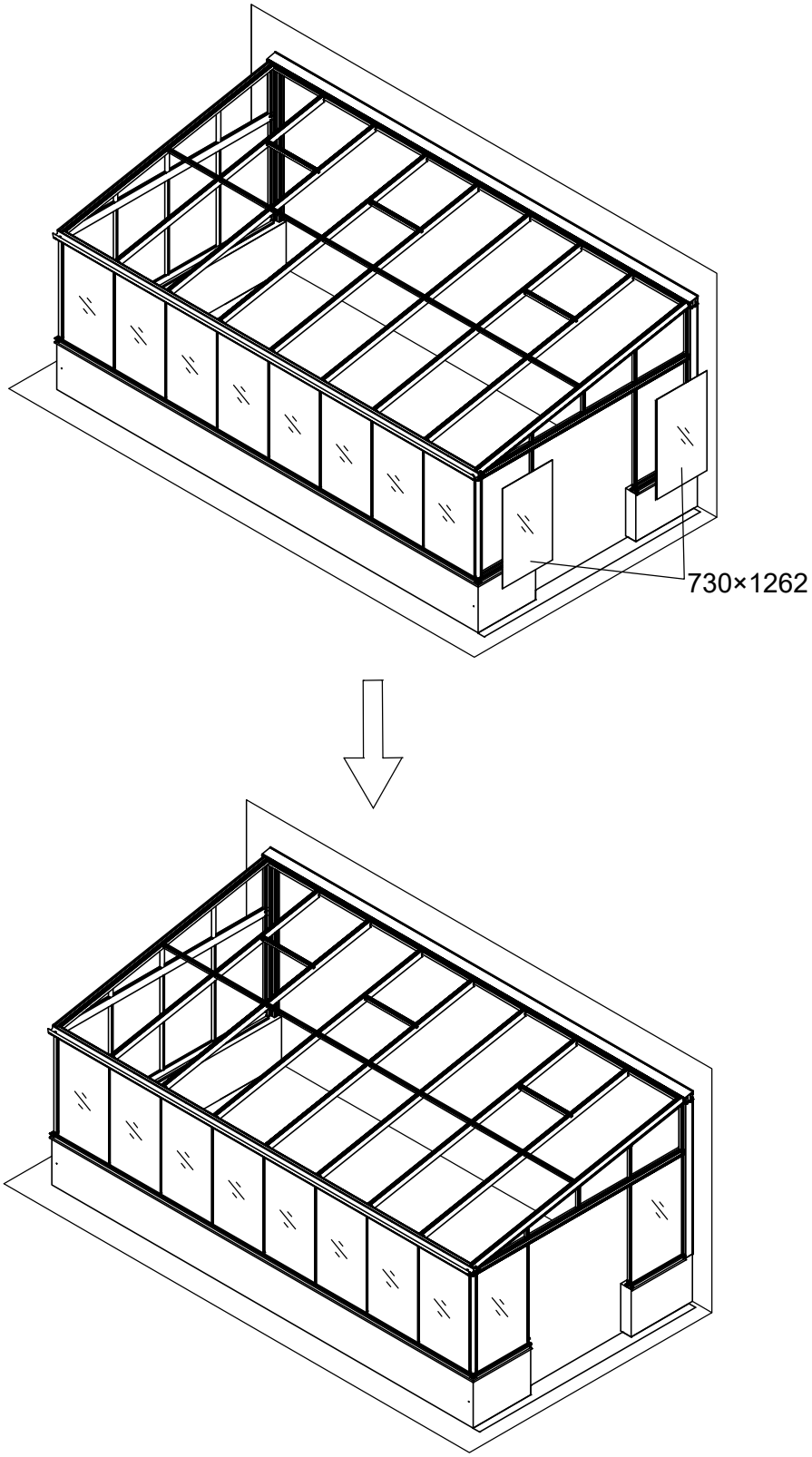

Part	Product	NO.	Length(MM)	QTY.	CTN NO.	Code
	3181	40X-Y14	3149	1	3171P-S-BASE4	A009
	3182	40X-Y15-5	3900	1	3171P-S-BASE5	
	3183	40X-Y15-6	4651	1	3171P-S-BASE6	
	3184	40X-Y15-7	5402	1	3171P-S-BASE7	
	3185	40X-Y15-8	6153	1	3171P-S-BASE8	

TOOL-001

Part	NO.	Length(MM)	QTY.	CTN NO.
	40L-S15L-4	3086	1	3171P-S-4F
	40LA-Y15	779	1	3171P-S-4-REAR
	40A-Y15-L	842	1	3171P-S-4-REAR

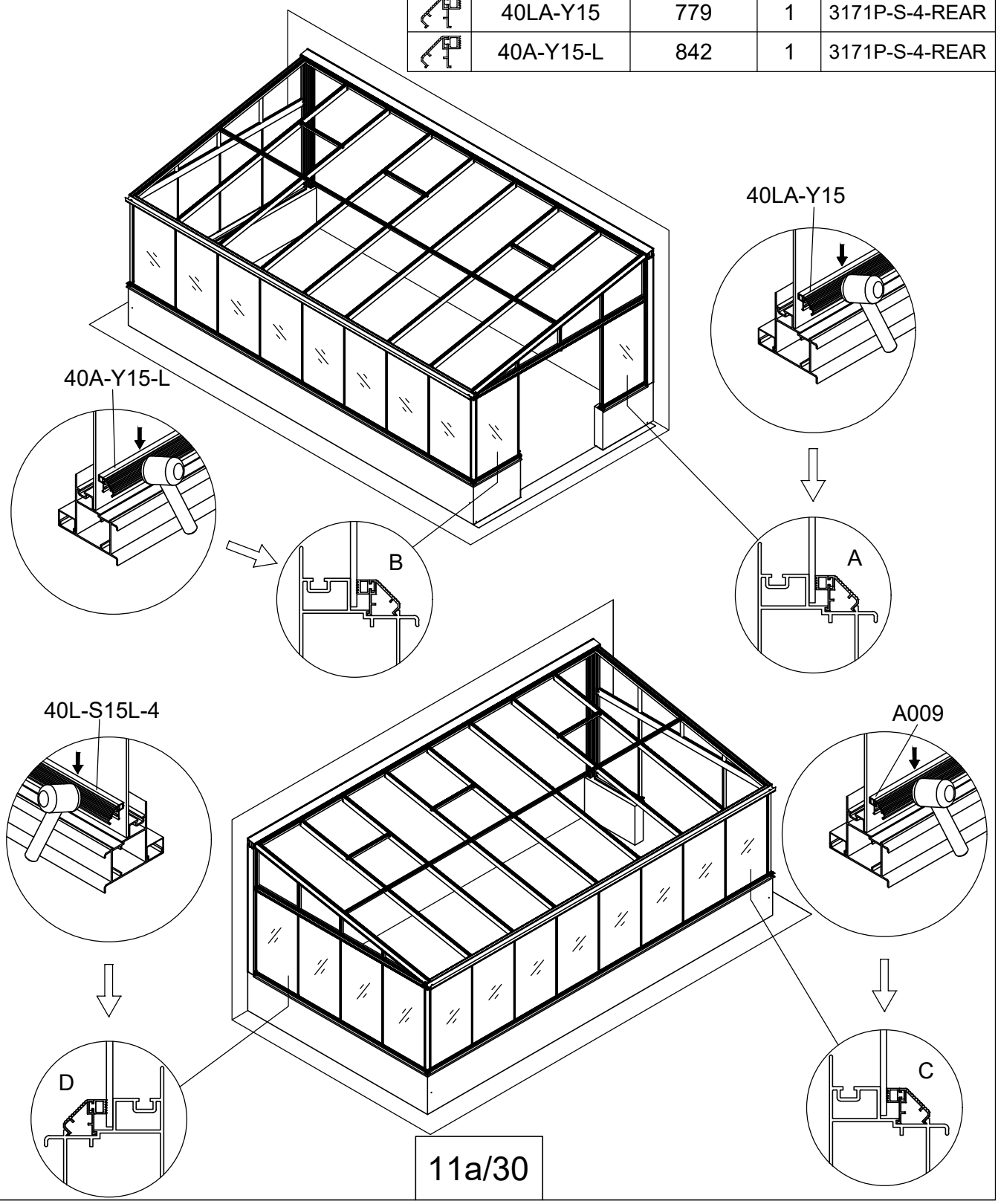

Part	NO.	QTY.					Length(MM)
		3181	3182	3183	3184	3185	
	40A-Y01	7	8	9	10	11	1235

Part	NO.	QTY.	Length(MM)
	40A-Y02	2	1235
	40LA-Y01	1	1235

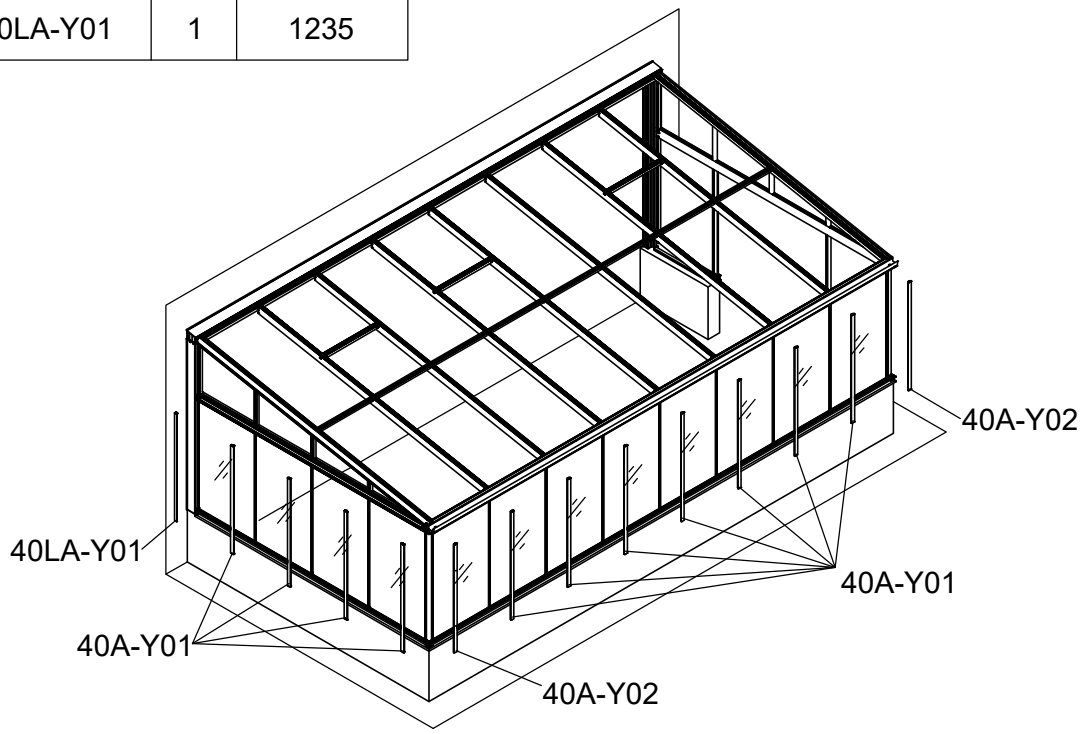

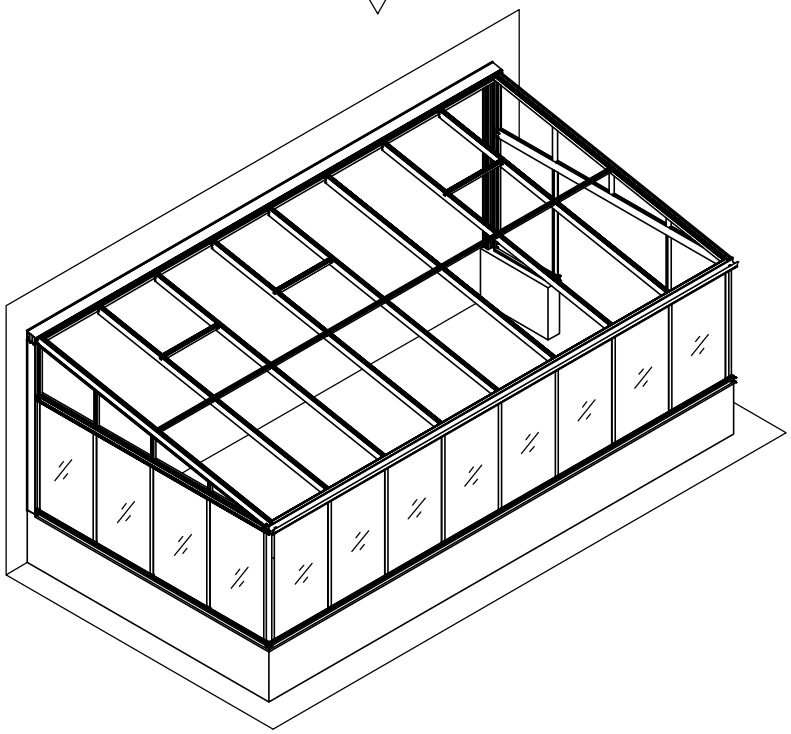

Part	NO.	QTY.	Length(MM)
	40A-Y01	3	1235
	40LA-Y01	1	1235

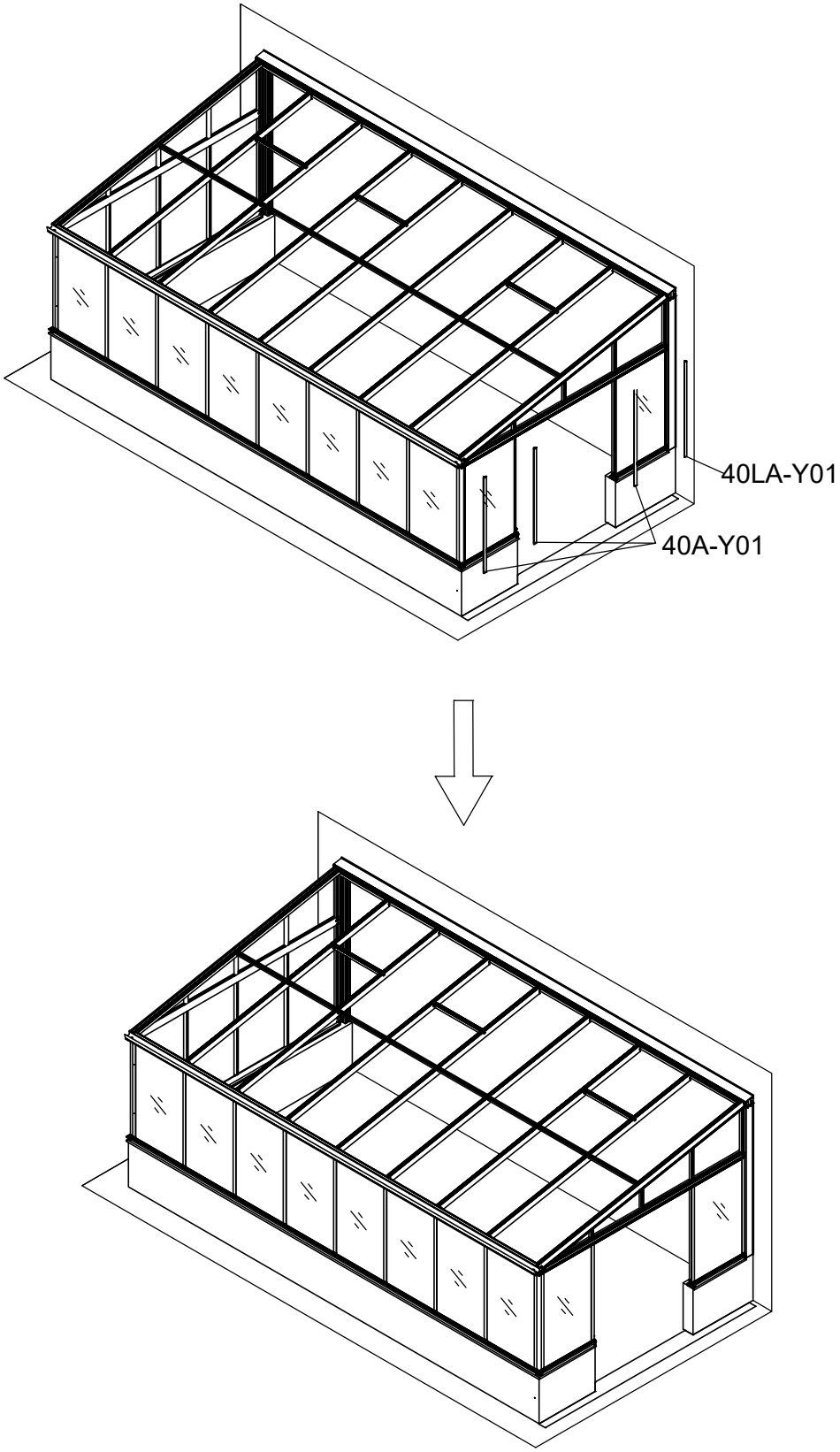

Part	NO.	QTY.					Length(MM)
		3181	3182	3183	3184	3185	
	7C26-007N	8M	8.8M	9.5M	10.3M	11M	

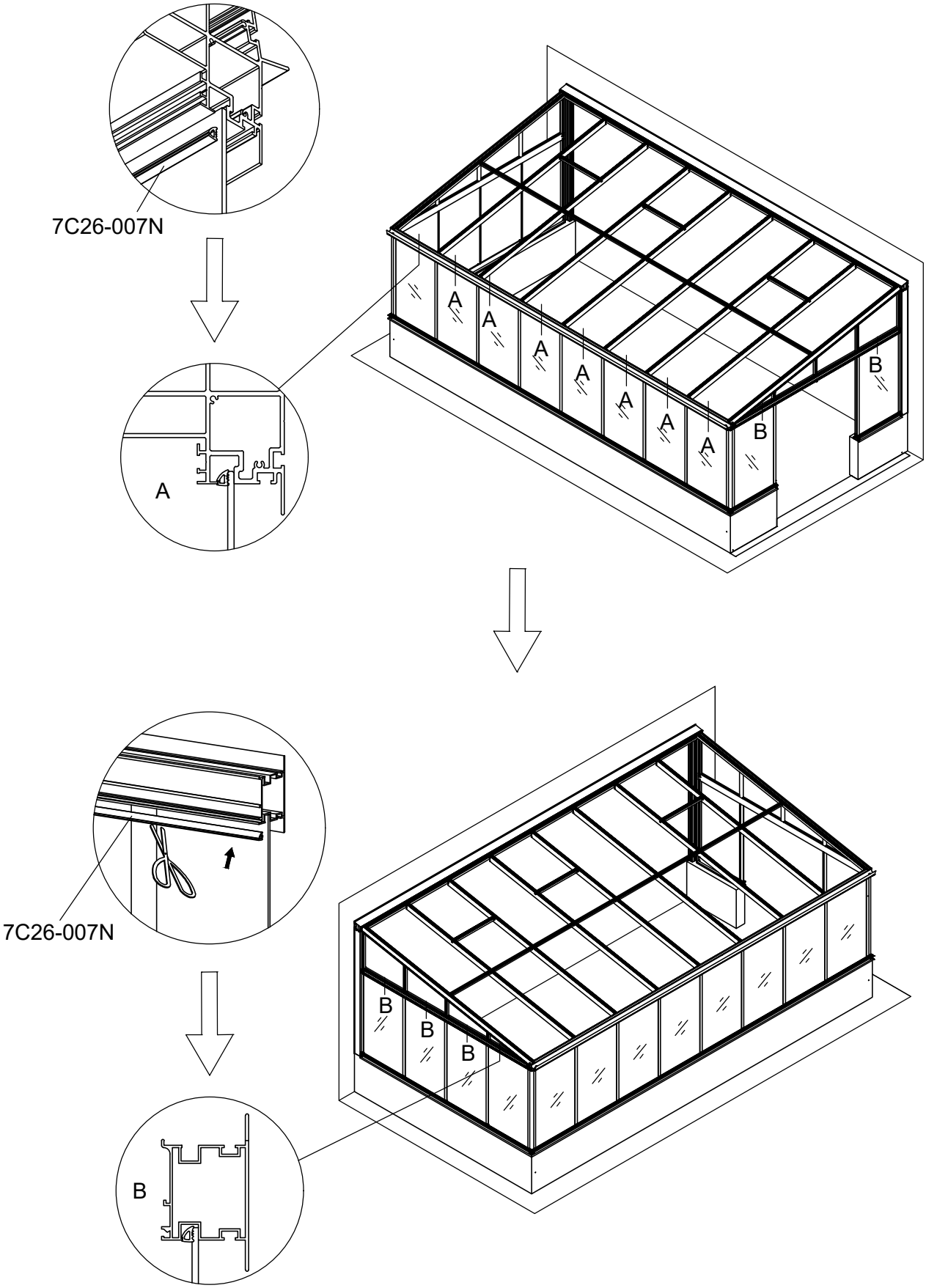

Part	NO.	QTY.	Length(MM)
	620×134	1	620
	730×280	1	730
	730×426	1	730
	730×572	1	730

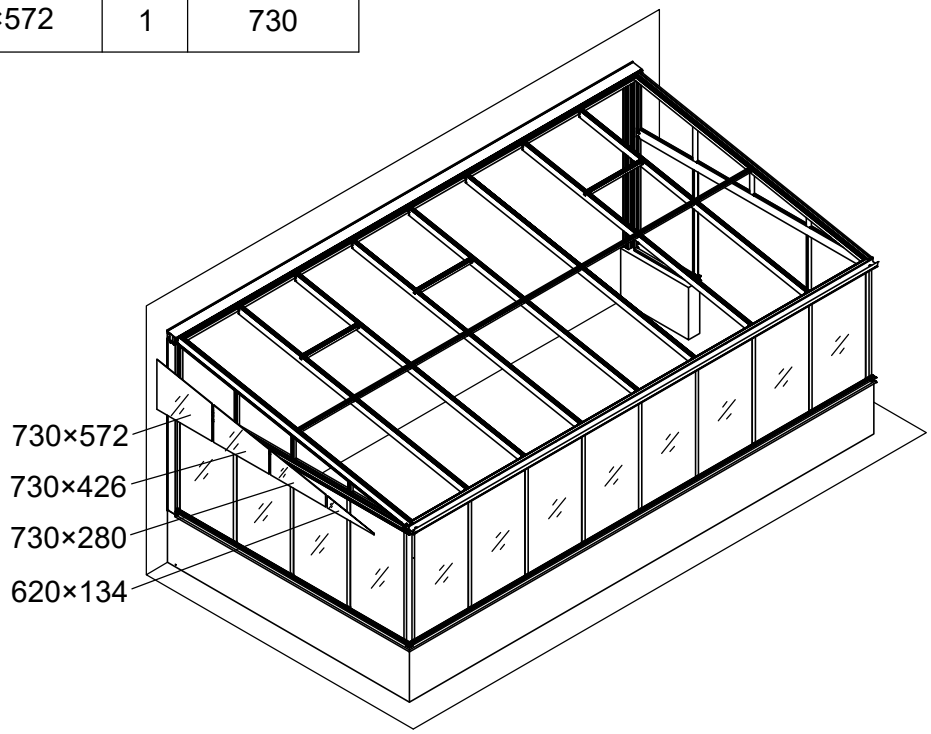

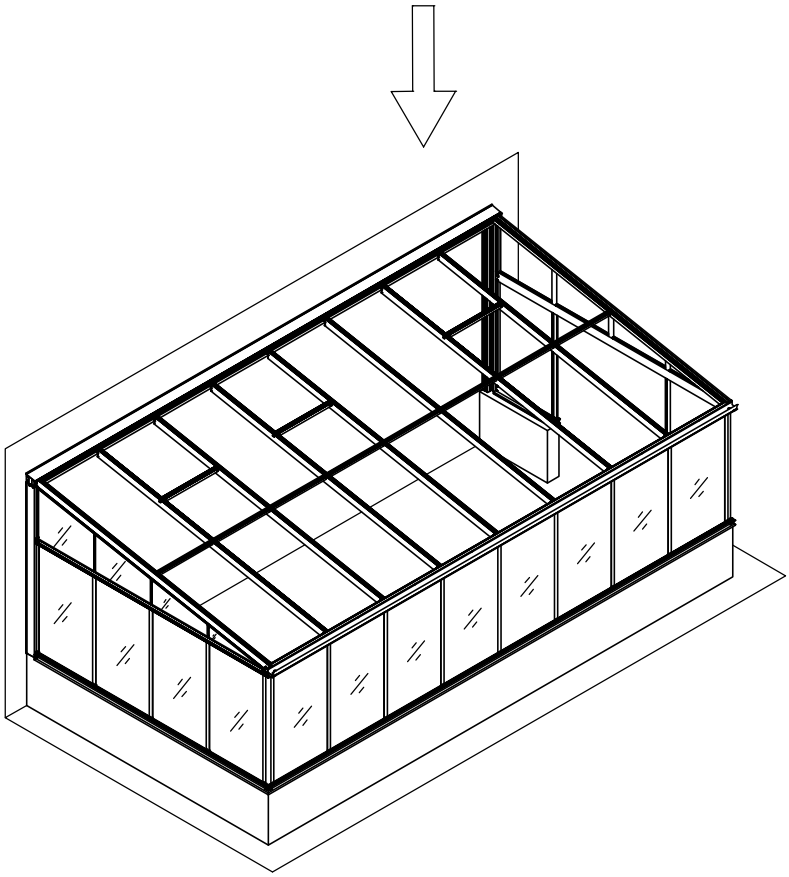

Part	NO.	QTY.	Length(MM)
	40L-Y05L-11	1	3080
	40X-Y04L-11C	1	416
	40X-Y04L-11B	1	270
	40X-Y04L-11A	1	124
	40L-Y04L-11	1	560

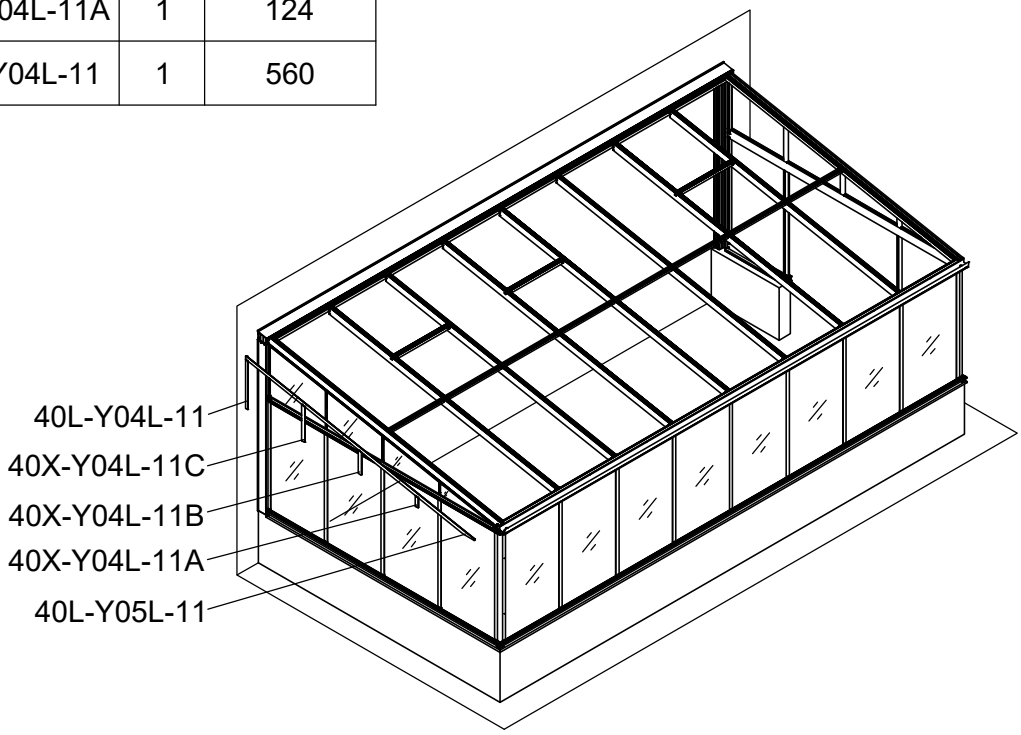

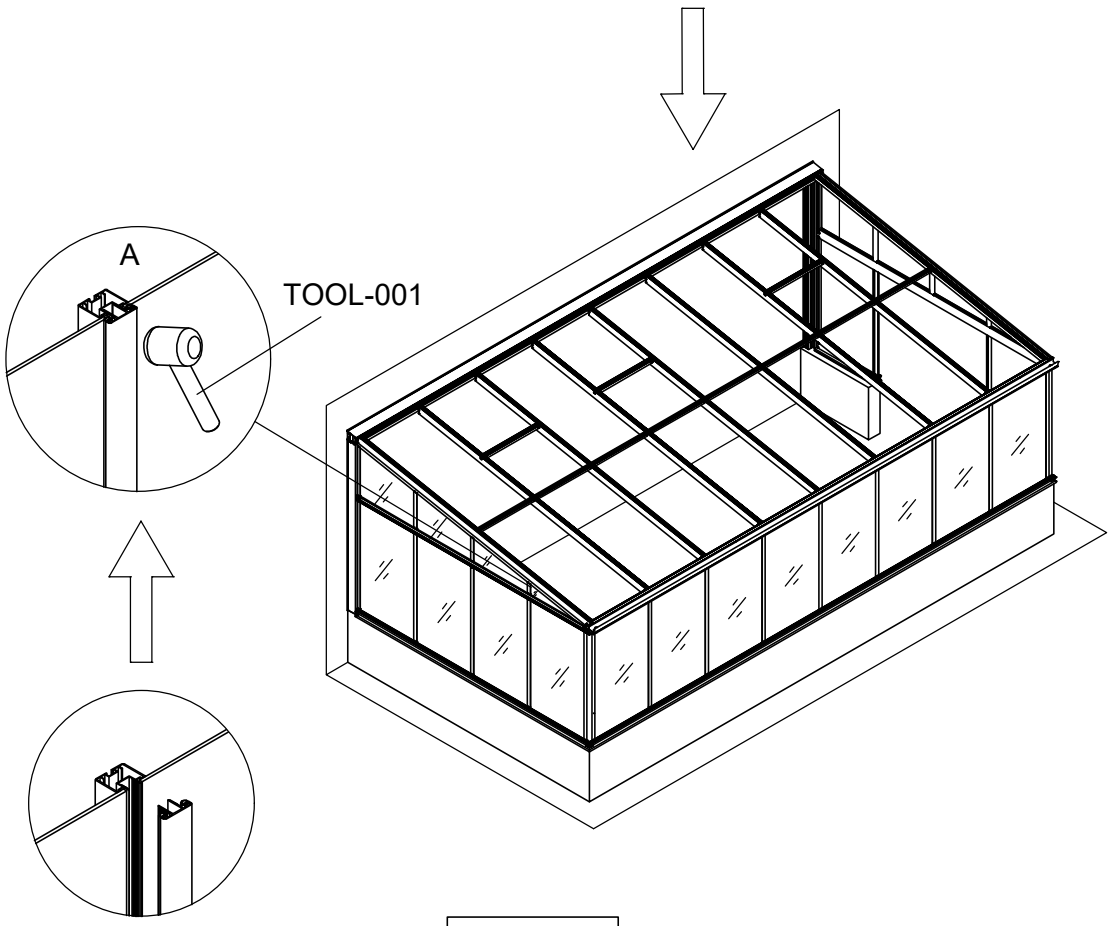

Part	NO.	QTY.	Length(MM)
	620×134	1	620
	730×280	1	730
	730×426	1	730
	730×572	1	730

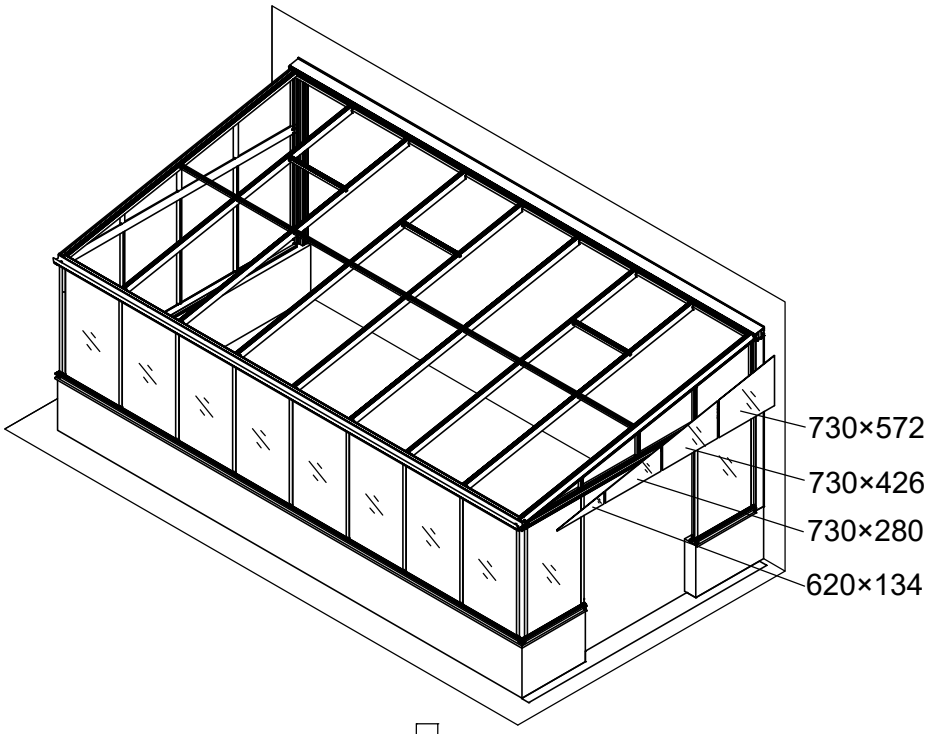

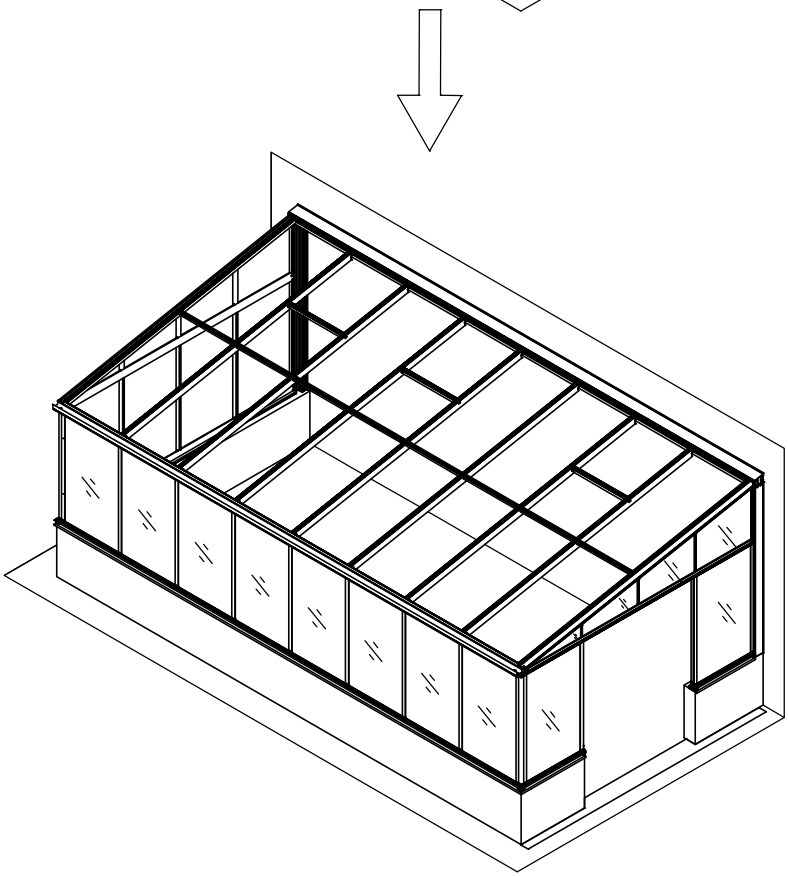

Part	NO.	QTY.	Length(MM)
	40L-Y05R-11	1	3080
	40X-Y04R-11C	1	416
	40X-Y04R-11B	1	270
	40X-Y04R-11A	1	124
	40L-Y04R-11	1	560

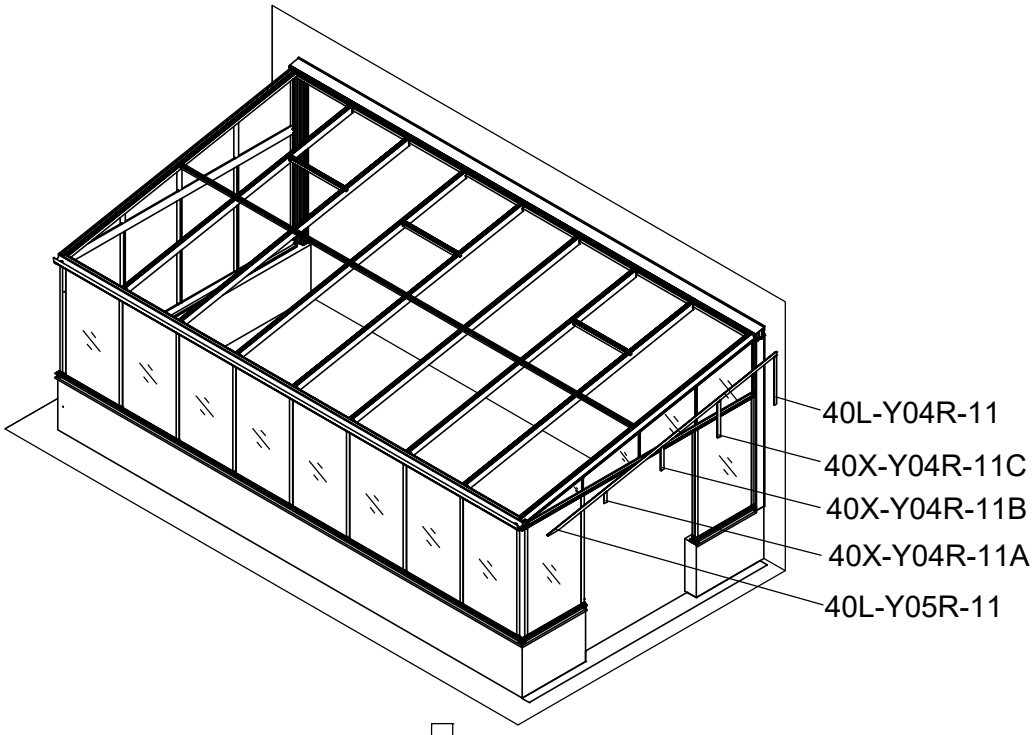

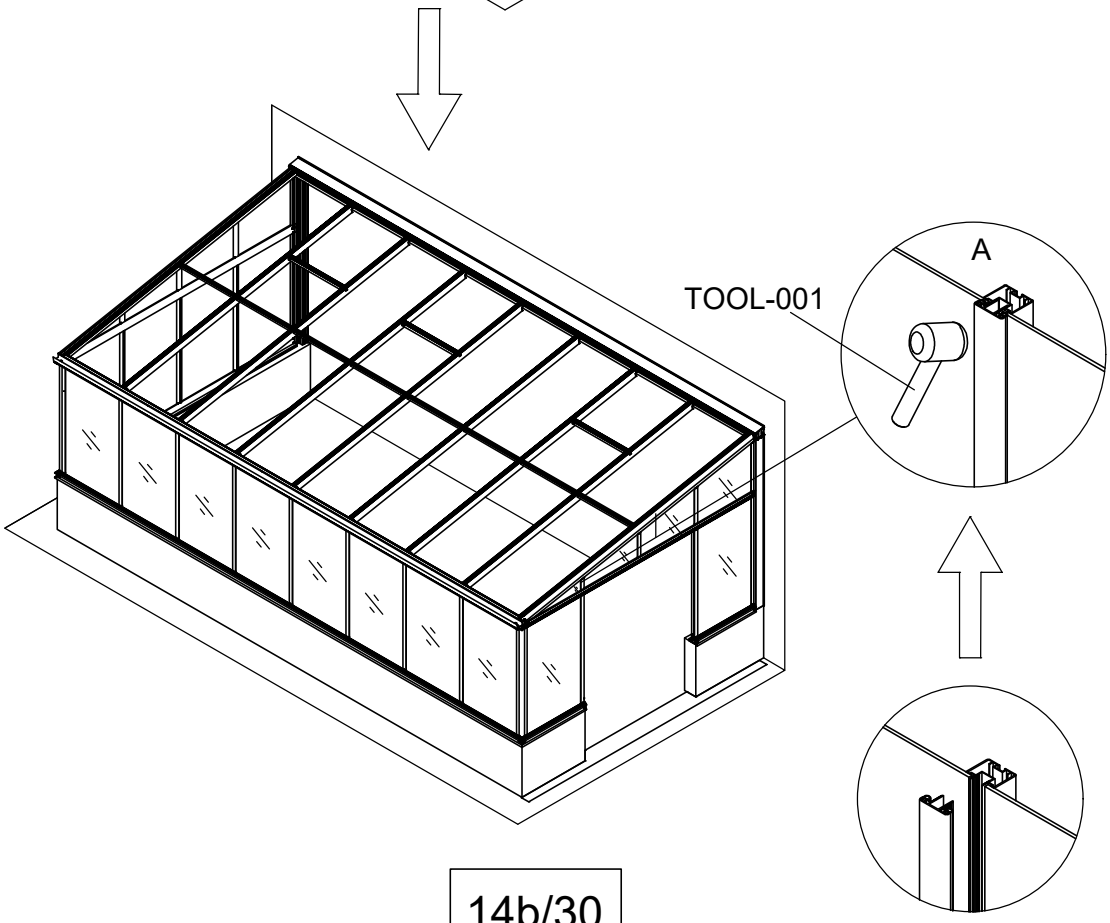

Part	NO.	QTY.					Length(MM)
		3181	3182	3183	3184	3185	
	729×1555	7	8	10	11	13	1555
	729×674	1	2	2	3	3	730

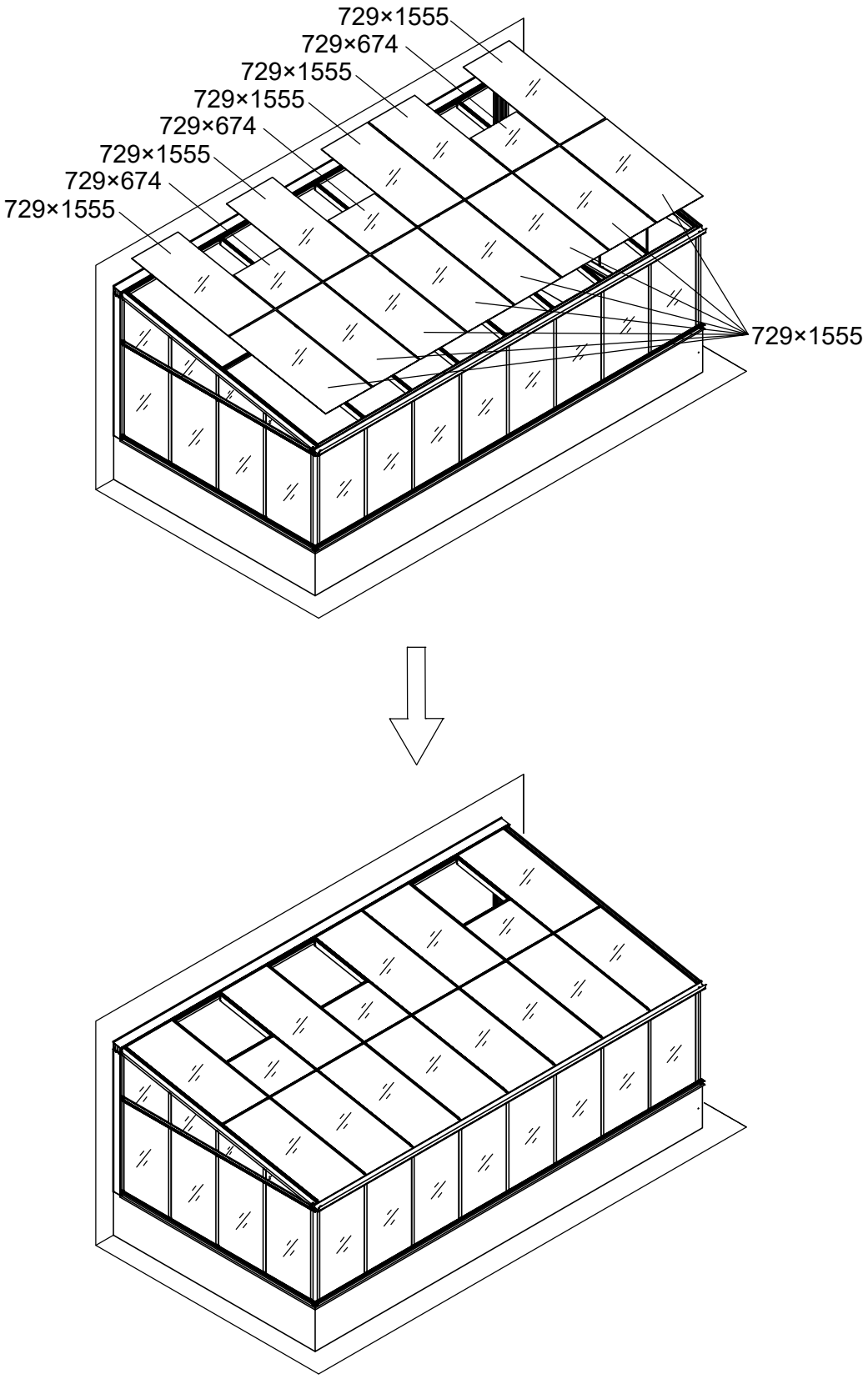

Part	NO.	QTY.					Length(MM)
		3181	3182	3183	3184	3185	
	J13	3M	3.8M	4.5M	5.3M	6M	

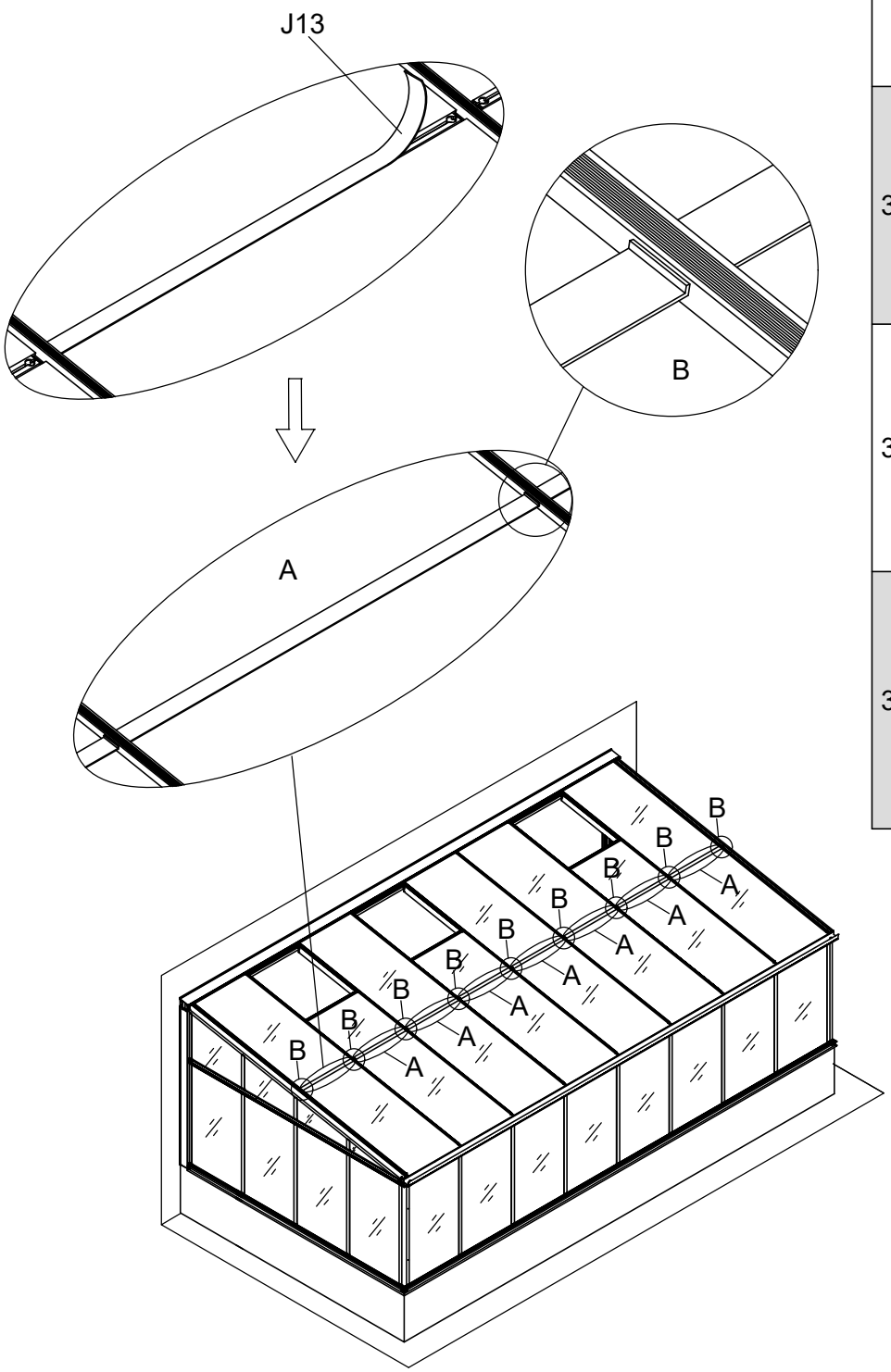

3181	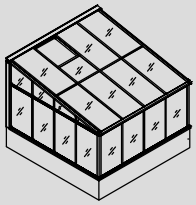
3182	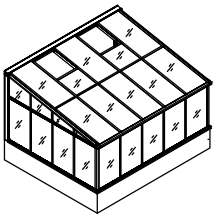
3183	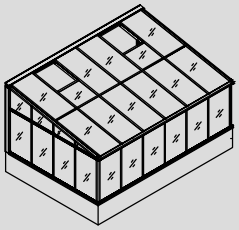
3184	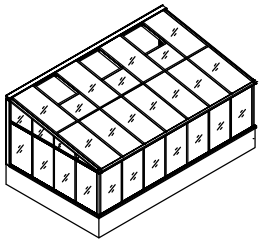
3185	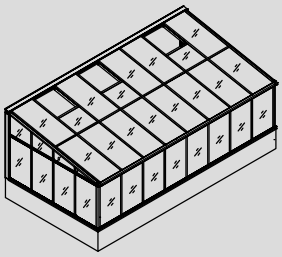

Part	NO.	QTY.					Length(MM)
		3181	3182	3183	3184	3185	
	40L-Y06-11	5	6	7	8	9	3118
	40L-Y07	1	2	2	3	3	713
	7B26-069	5	6	7	8	9	PCS

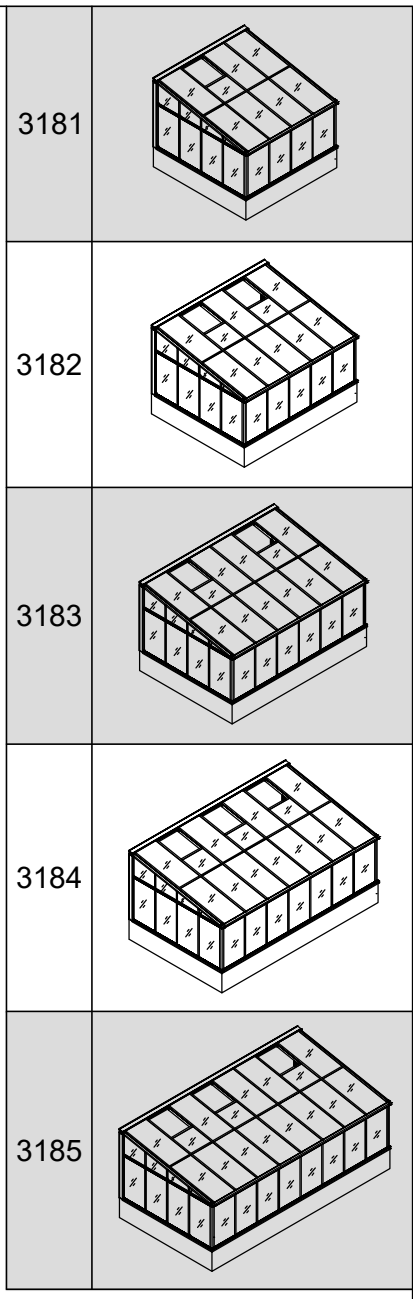

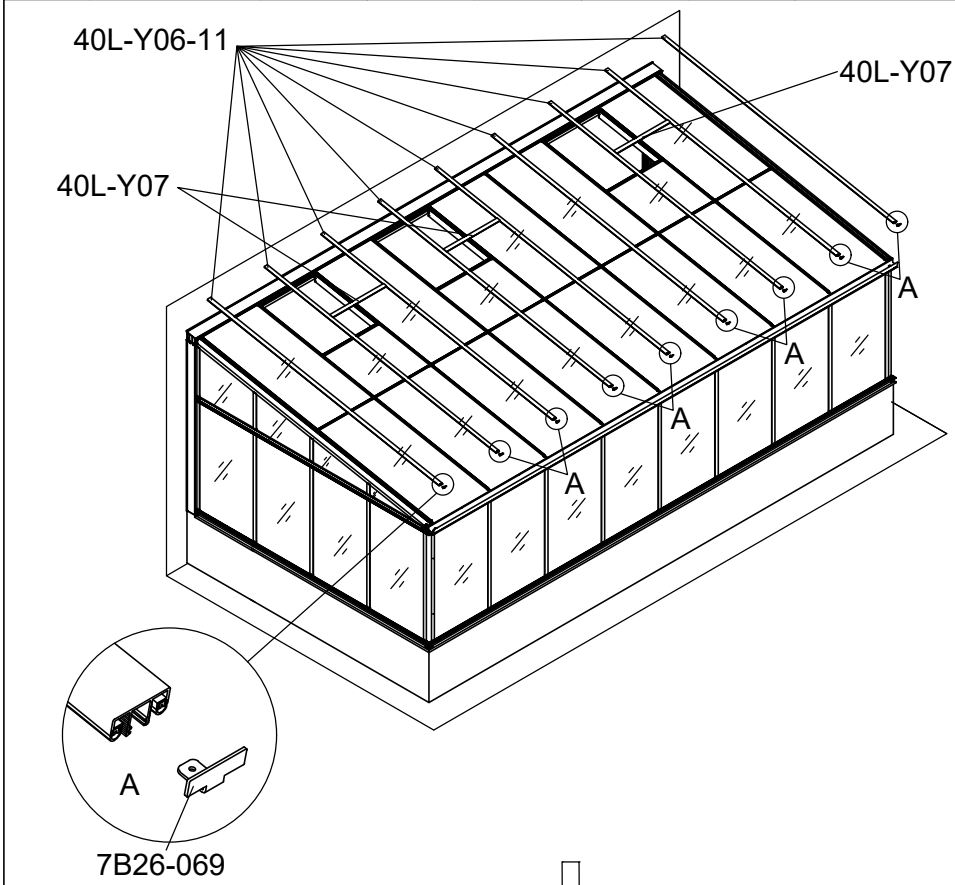

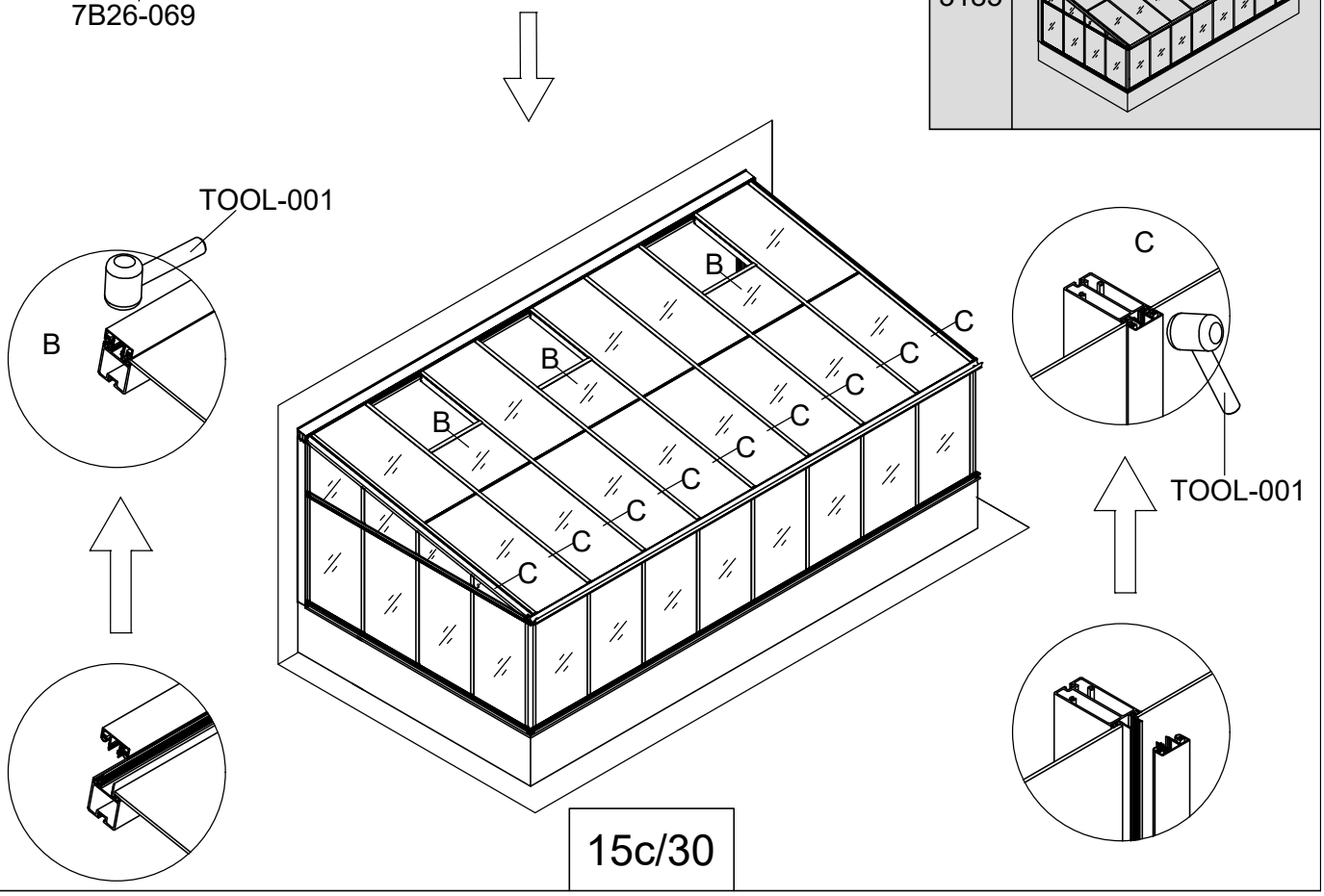

Part	NO.	QTY.					Length(MM)
		3181	3182	3183	3184	3185	
	40L-Y08N1	2	2	2	2	2	711
	40L-Y08N2	2	3	4	5	6	713
	Z4.8-19	16	20	24	28	32	PCS
	J08	1					PCS
	GREASE	1					PCS

3181	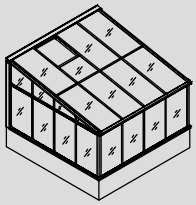
3182	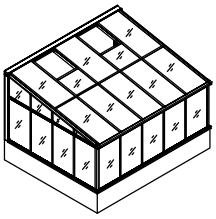
3183	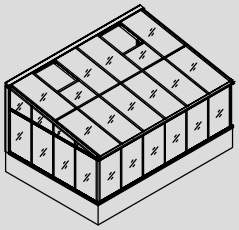
3184	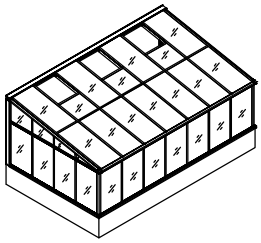
3185	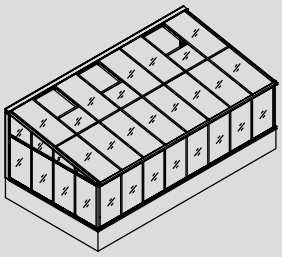

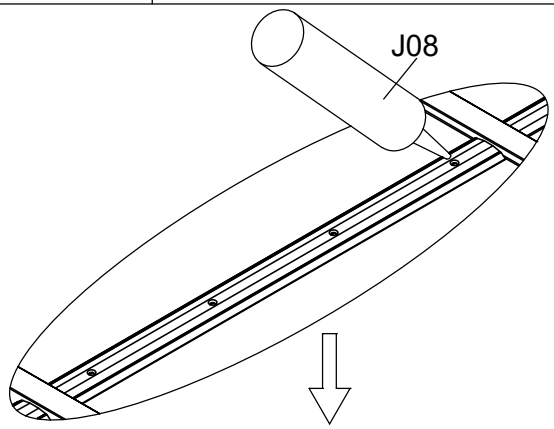

Please put some universal grease to these screws.

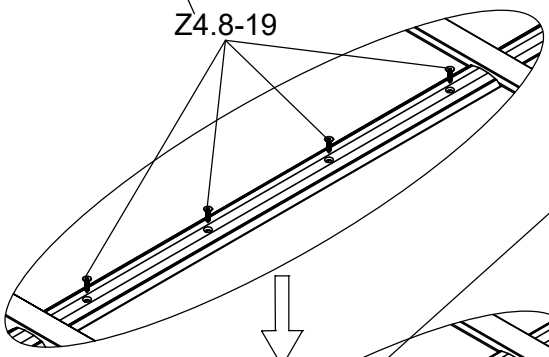

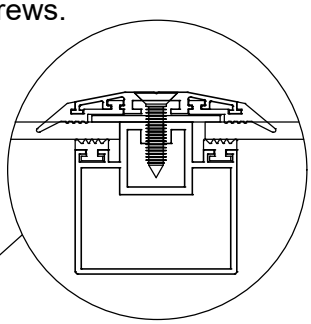

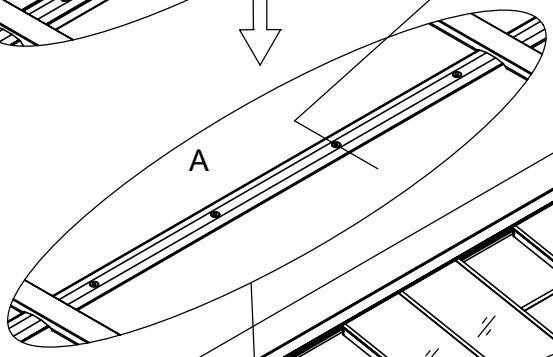

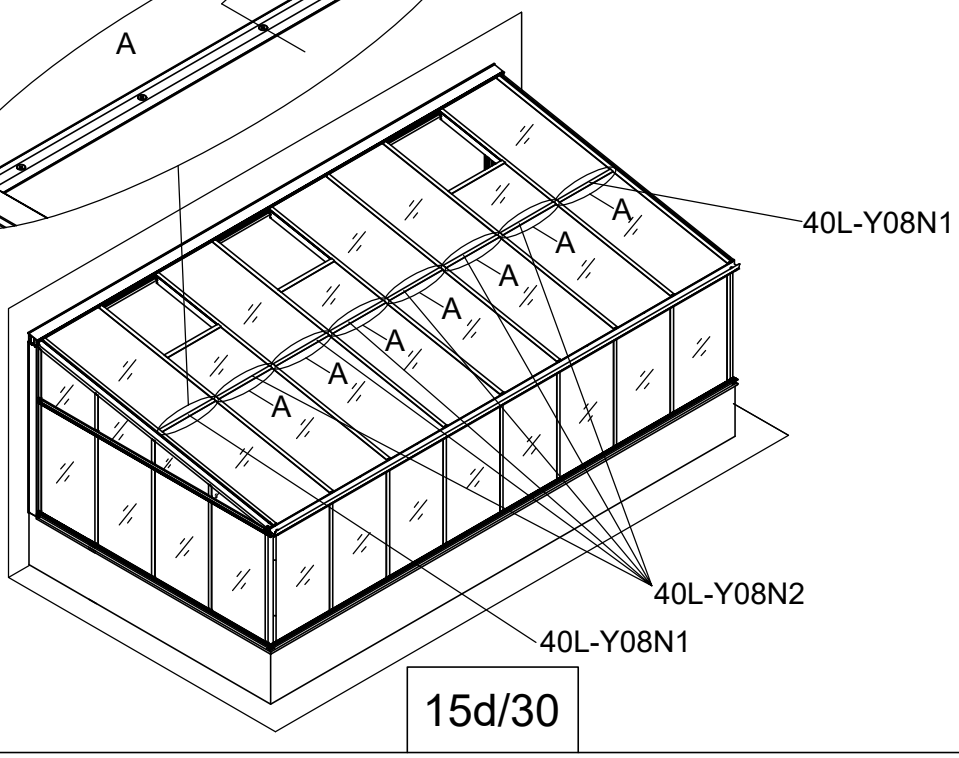

Part	NO.	QTY.					Length(MM)
		3181	3182	3183	3184	3185	
	7C26-038	3M	3M	3.8M	3.8M	4.5M	

Part	NO.	QTY.	Length(MM)
	7C26-007N	6.5M	

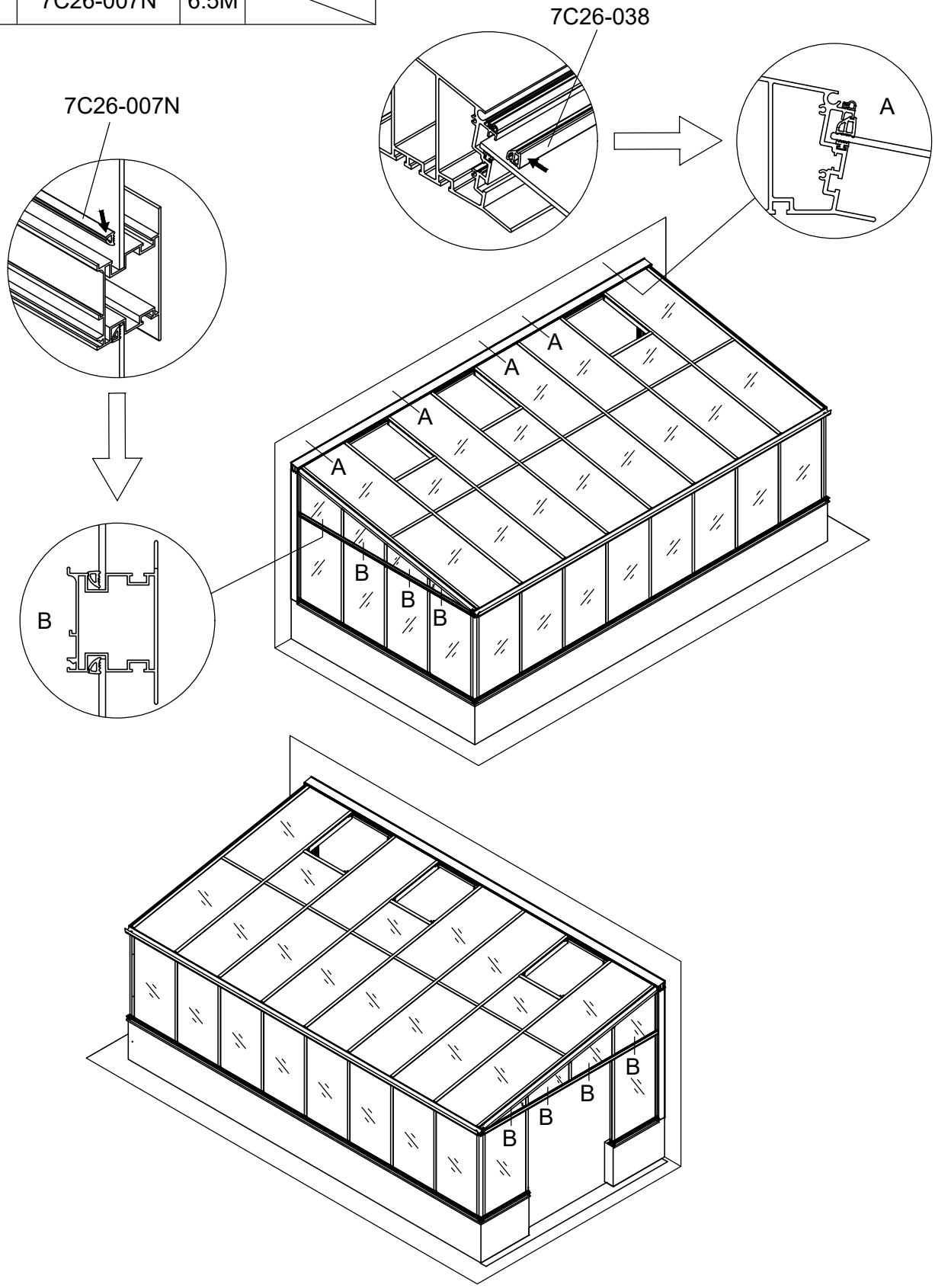

Part	NO.	QTY.	Length(MM)
	J08	1	PCS

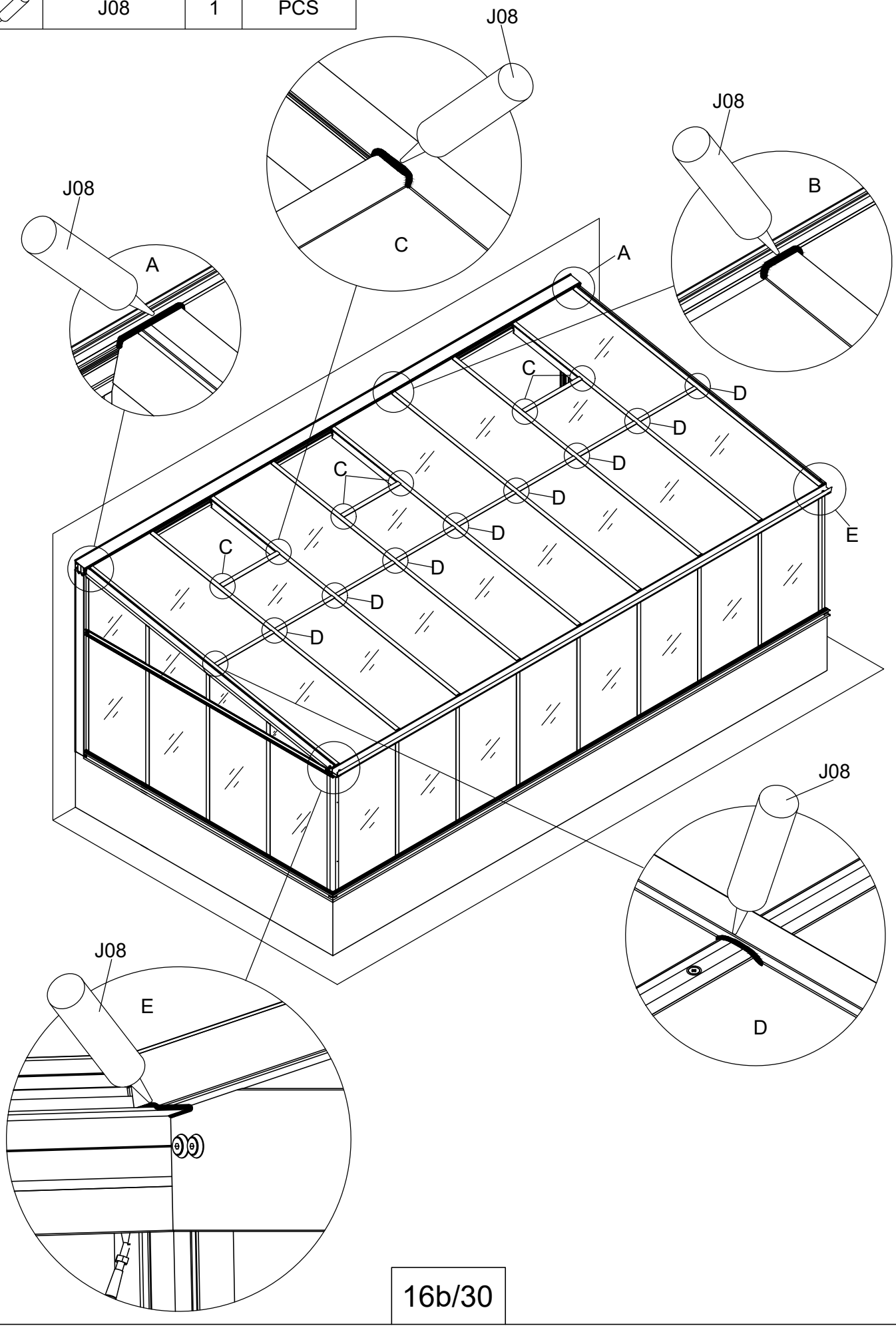

Part	Product	NO.	Length(MM)	QTY.	CTN NO.	Code
	3181	40L-Y62-4A	3134	1	3171P-S-BASE4	A010
	3182	40L-Y62-5A	3885	1	3171P-S-BASE5	
	3183	40L-Y62-6A	4636	1	3171P-S-BASE6	
	3184	40L-Y62-7A	5387	1	3171P-S-BASE7	
	3185	40L-Y62-8A	6138	1	3171P-S-BASE8	

Part	NO.	Length(MM)	QTY.	CTN NO.
	40X-Y60-AN	3023	1	3171P-S-4F

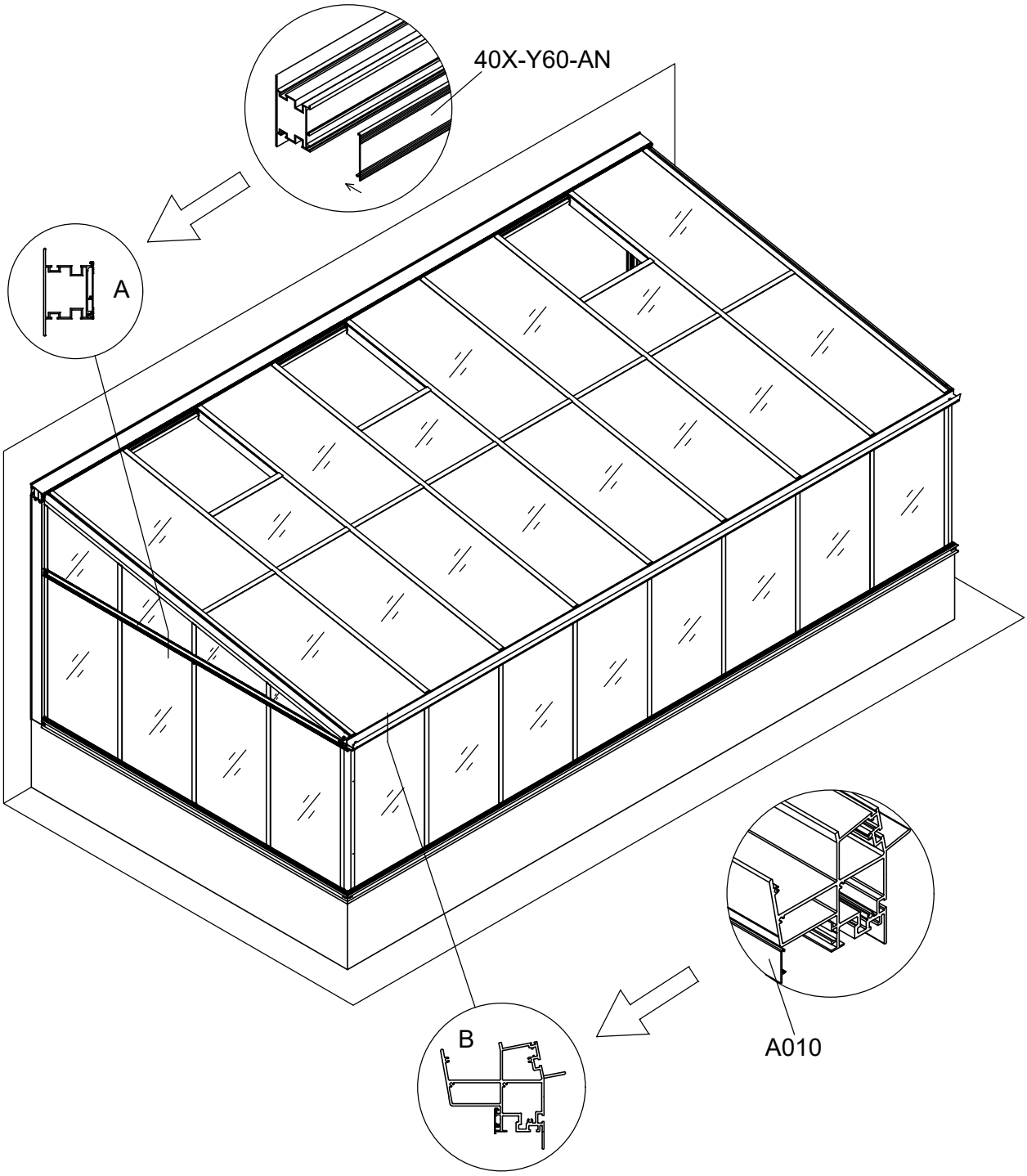

Part	NO.	QTY.	Length(MM)
	40A-Y90	2	1866
	40A-Y91R	1	1866
	40A-Y91L	1	1866
	40A-Y92R	1	769
	40A-Y92L	1	769
	40A-Y93	2	769
	W03	8	30
	W04	16	PCS

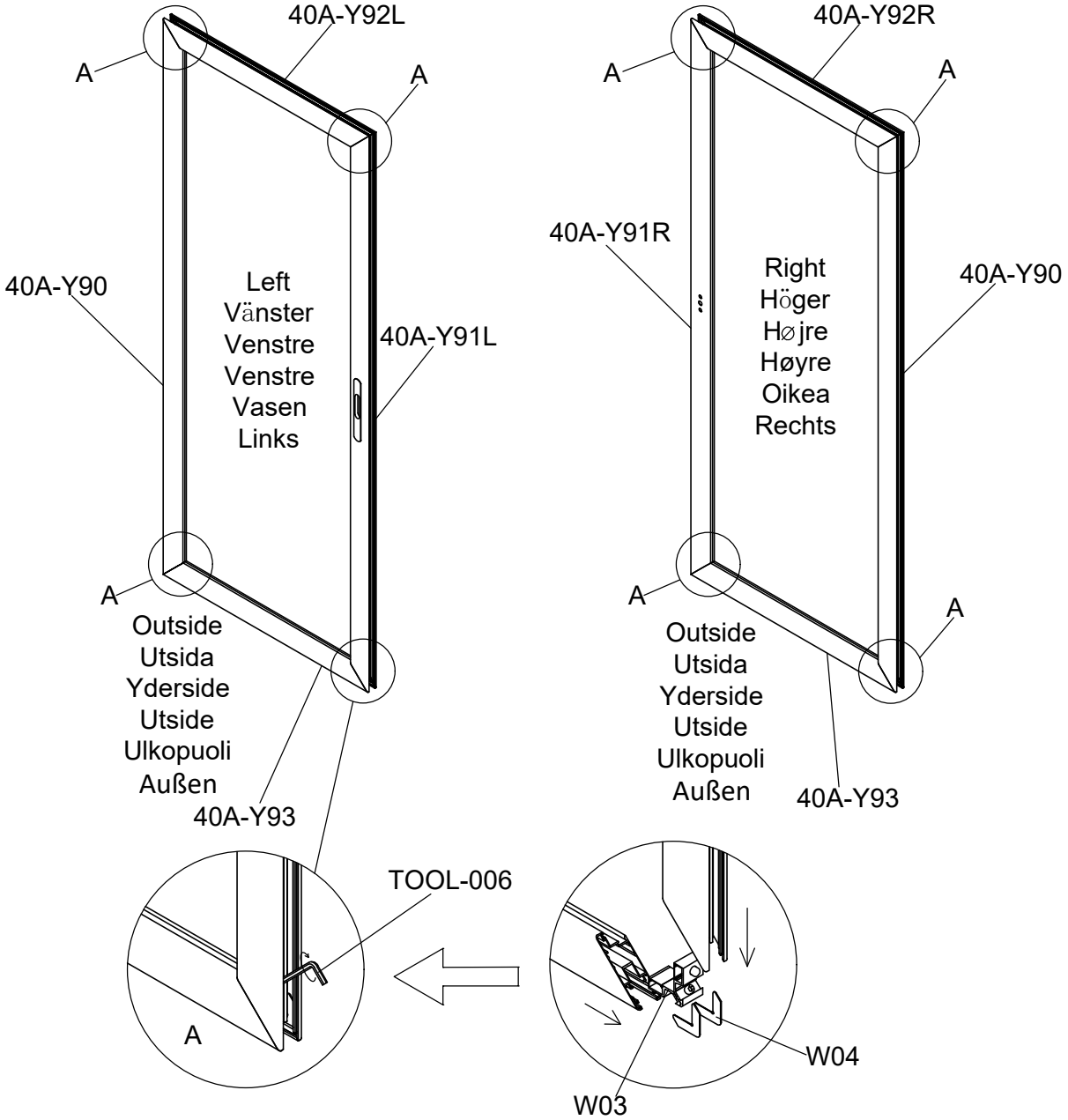

Part	NO.	QTY.	Length(MM)
	659×1756	1	1756
	40A-Y95	2	1765
	40A-Y96	2	668

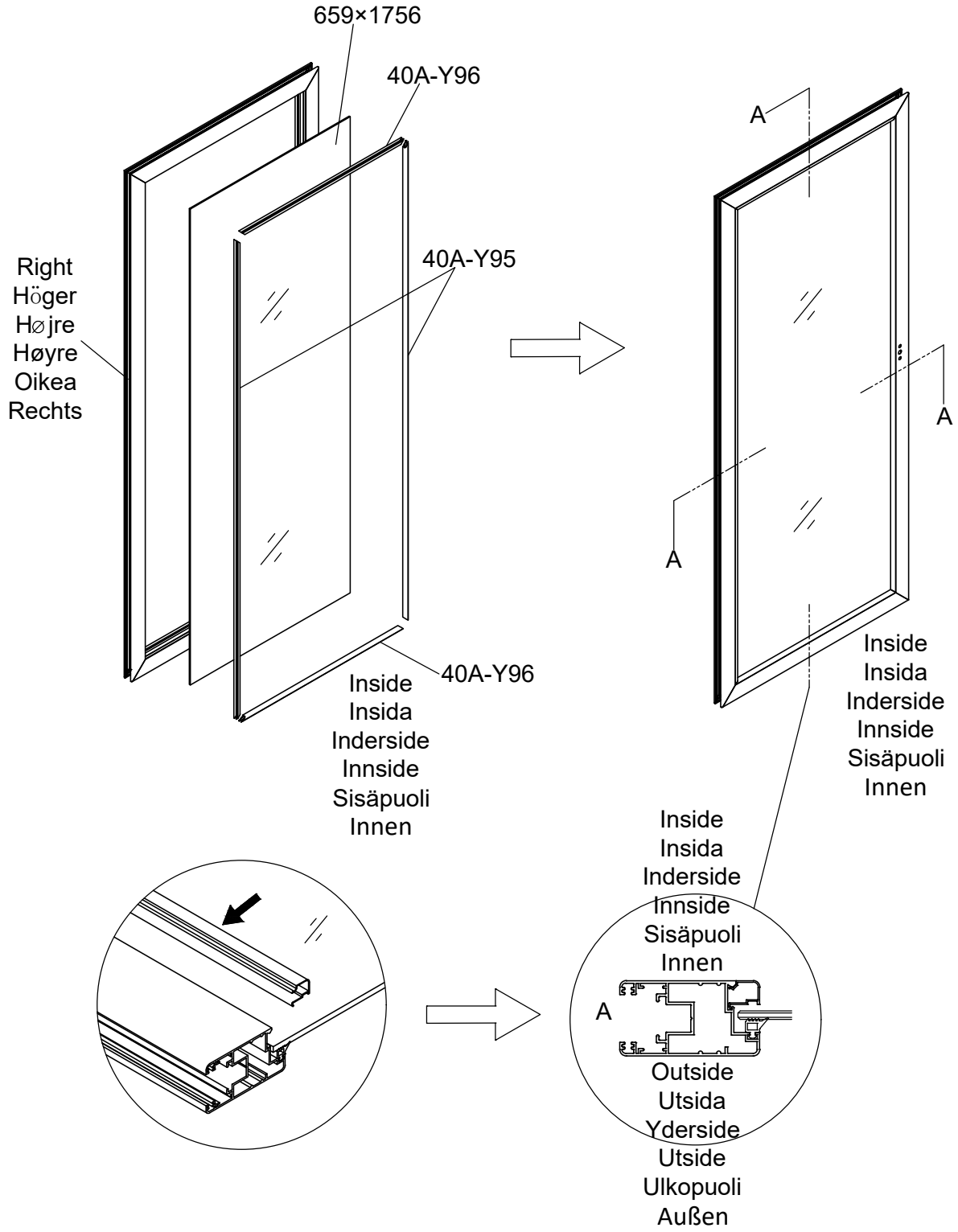

Part	NO.	QTY.	Length(MM)
	659×1756	1	1756
	40A-Y95	2	1765
	40A-Y96	2	668

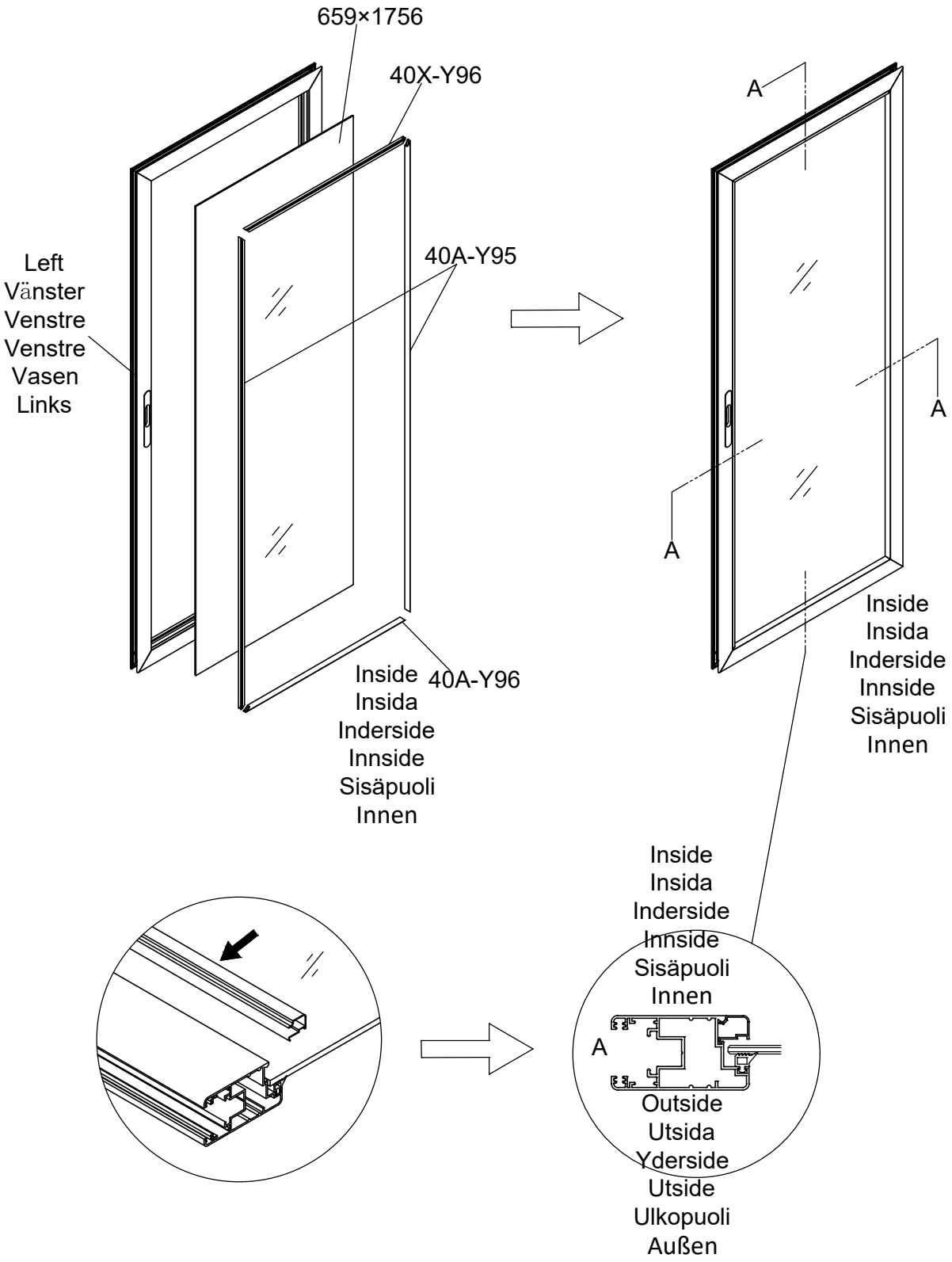

Part	NO.	QTY.	Length(MM)
	MCJT002	11M	

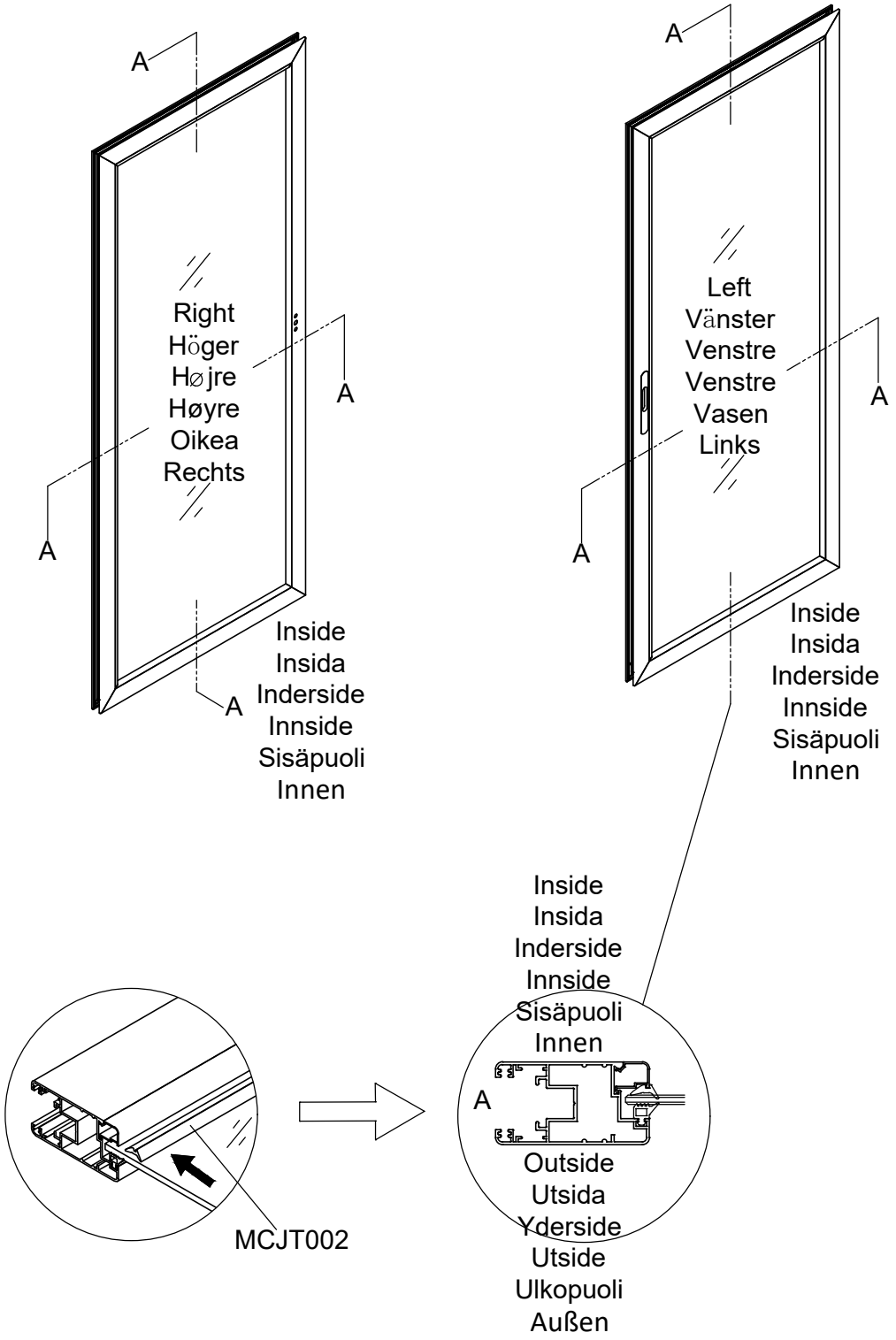

Part	NO.	QTY.	Length(MM)
	40A-Y97R	1	1860
	40A-Y97-A	1	1851
	Z4.2-13	4	PCS

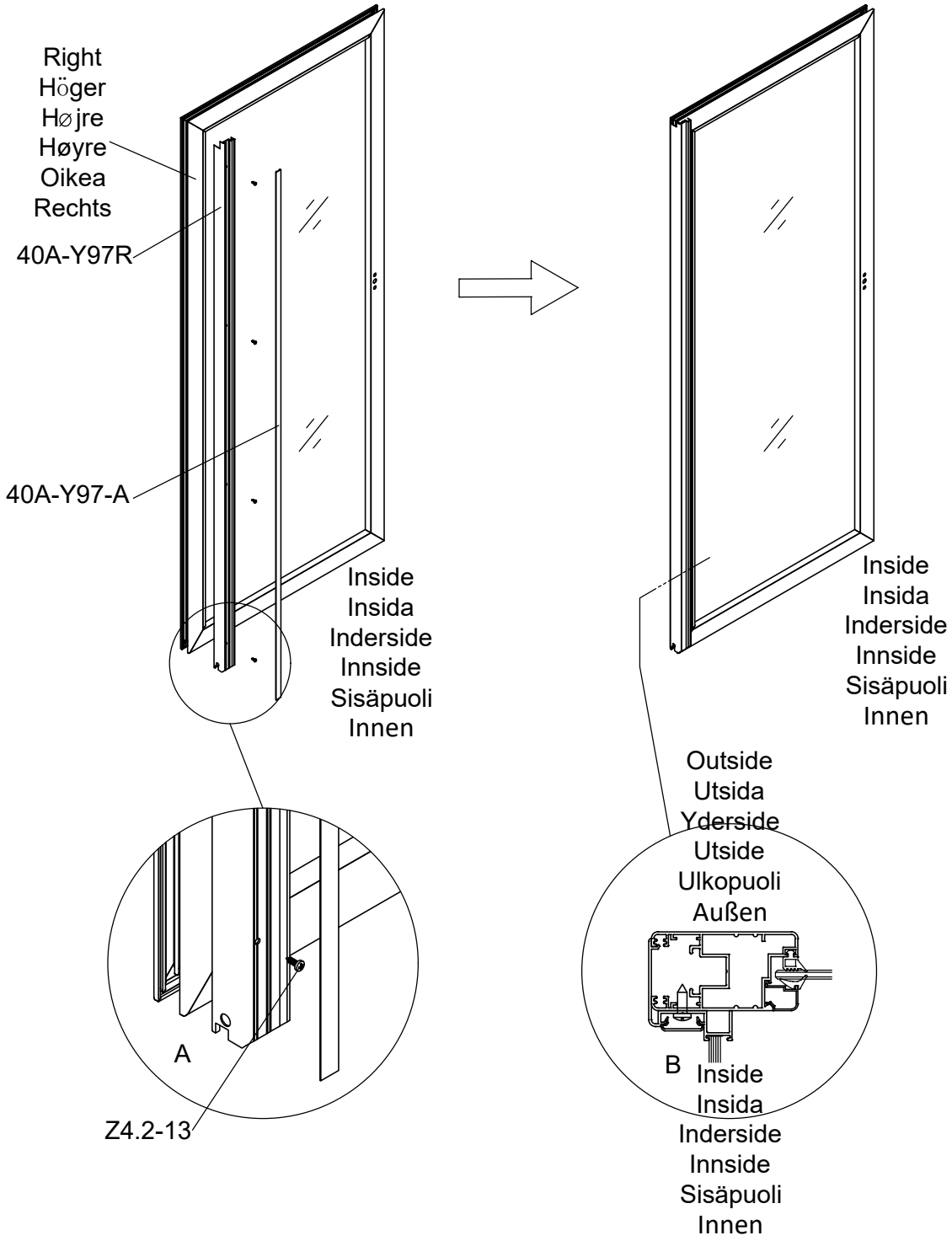

Part	NO.	QTY.	Length(MM)
	40A-Y97L	1	1860
	40A-Y97-A	1	1851
	Z4.2-13	4	PCS

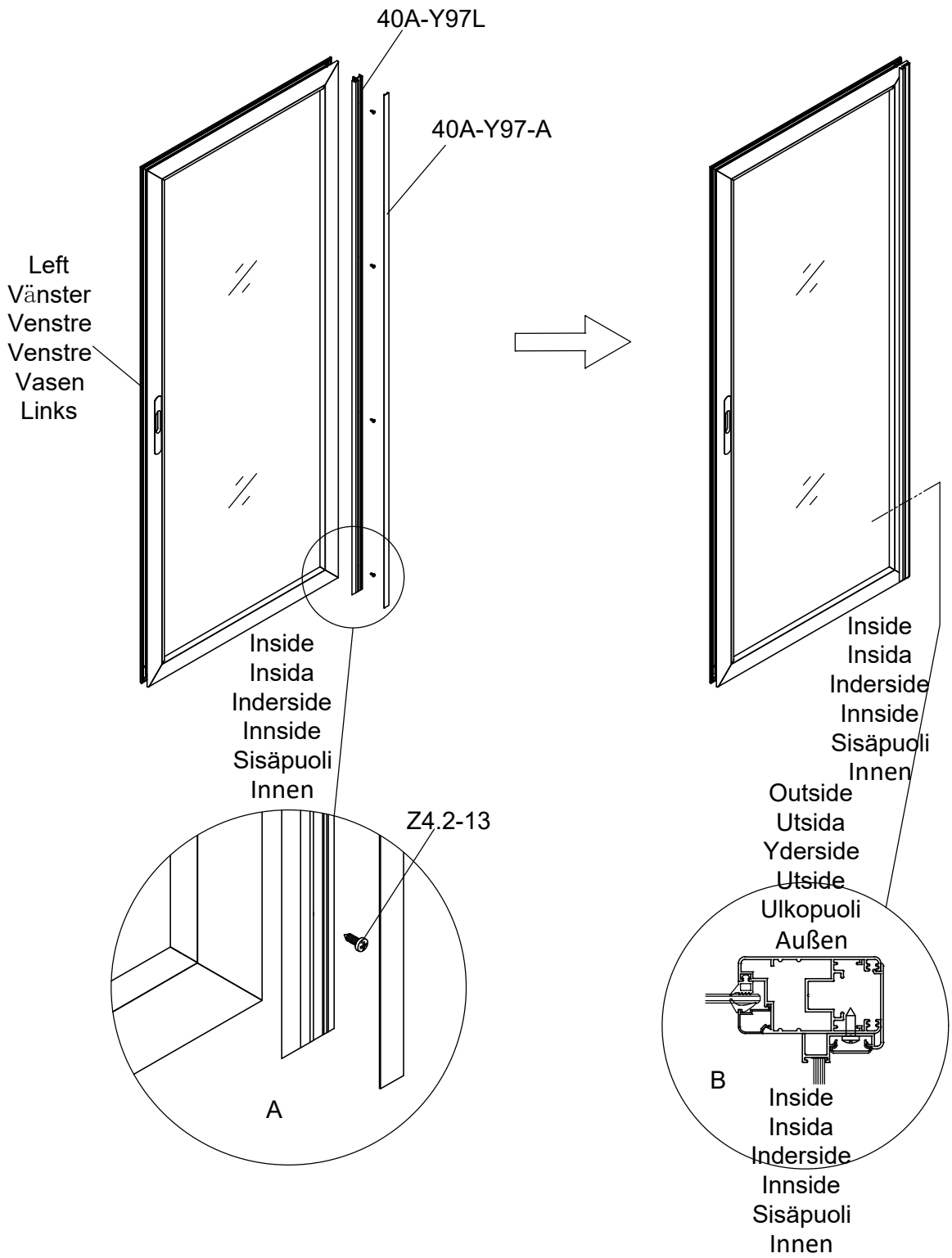

Part	NO.	QTY.	Length(MM)
	40A-Y94	1	1835
	NSST120	1.9M	
	T04	2	PCS
	Z4.2-38	3	PCS
	Z3.5-25	4	PCS

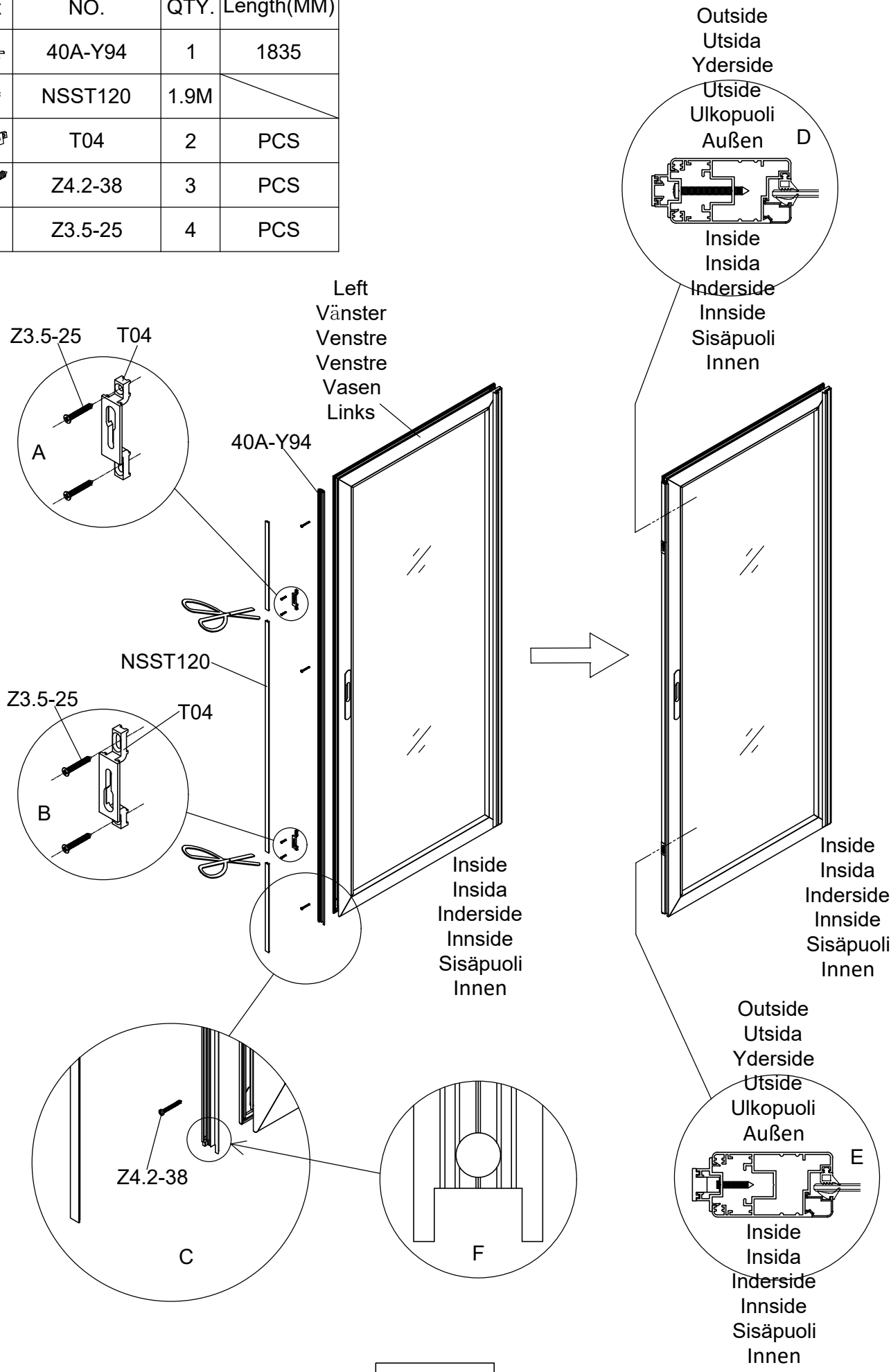

Part	NO.	QTY.	Length(MM)
	40A-Y98-R	1	1910
	40A-Y98-L	1	1910
	M6-35	2	PCS
	Si6-35	6	PCS
	J05	6	PCS

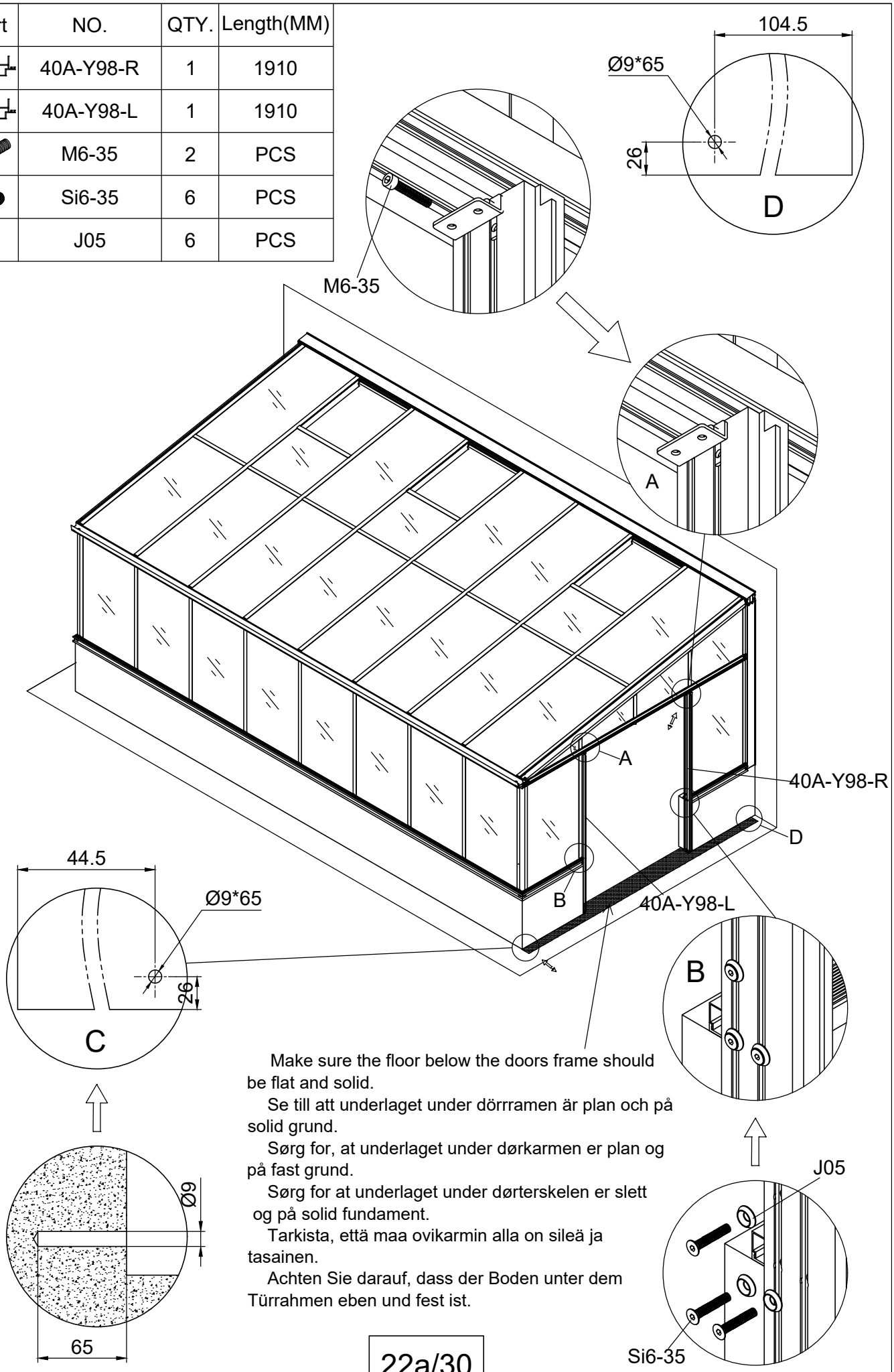

Make sure the floor below the doors frame should be flat and solid.

Se till att underlaget under dörrramen är plan och på solid grund.

Sørg for, at underlaget under dørkarmen er plan og på fast grund.

Sørg for at underlaget under dørterskelen er slett og på solid fundament.

Tarkista, että maa ovikarmin alla on sileä ja tasainen.

Achten Sie darauf, dass der Boden unter dem Türrahmen eben und fest ist.

Part	NO.	QTY.	Length(MM)
	40A-Y99	1	1424
	40A-Y100	1	1424
	Si6-16	10	PCS
	J05	10	PCS
	PS6-60	2	PCS

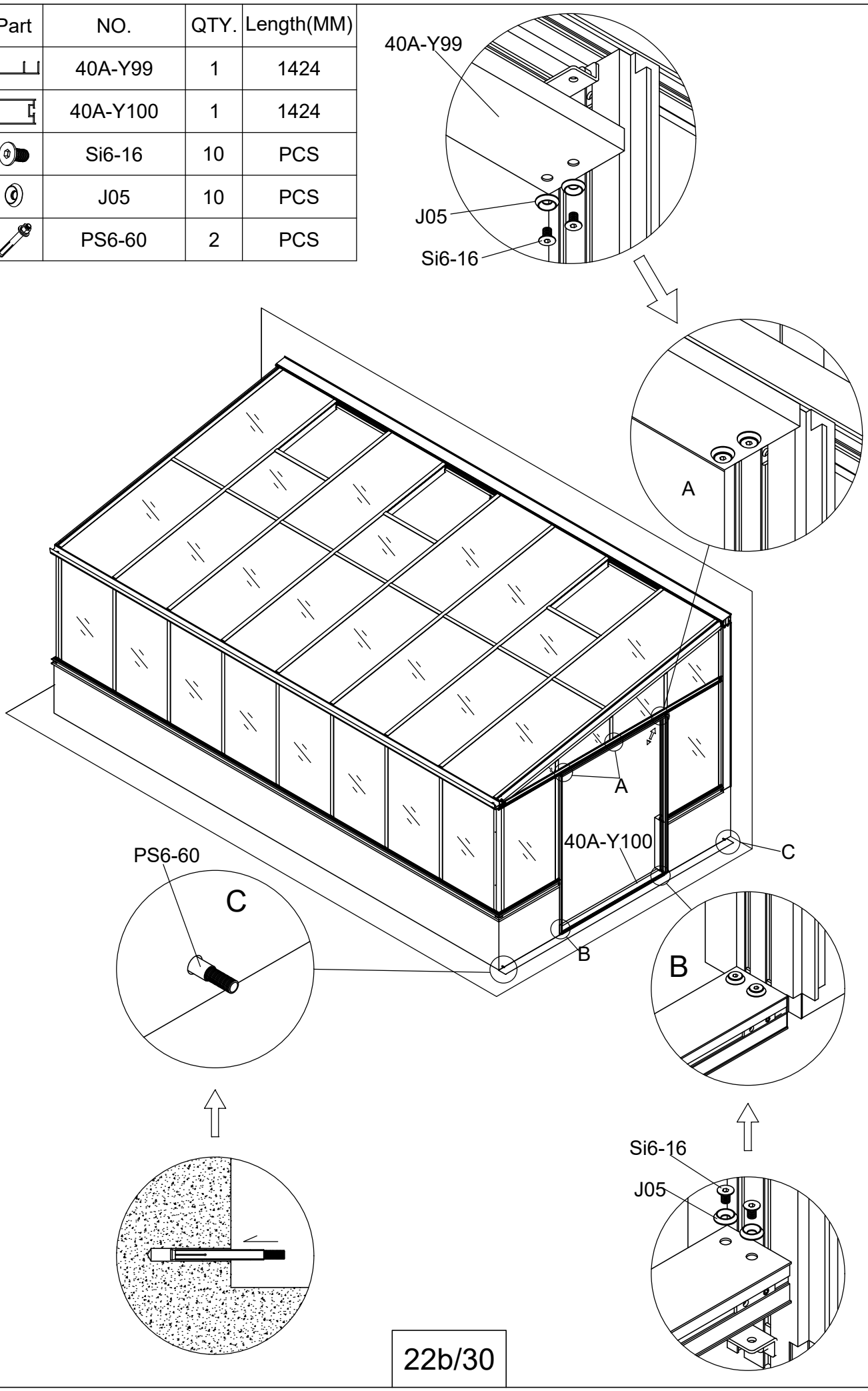

Part	NO.	QTY.	Length(MM)
	40A-Y64	1	3016
	40A-Y17	1	3110
	7C28-004	5	PCS
	Z4.2-50	5	PCS
	Si6-25	3	PCS
	J05	3	PCS
	7C26-031	2	PCS

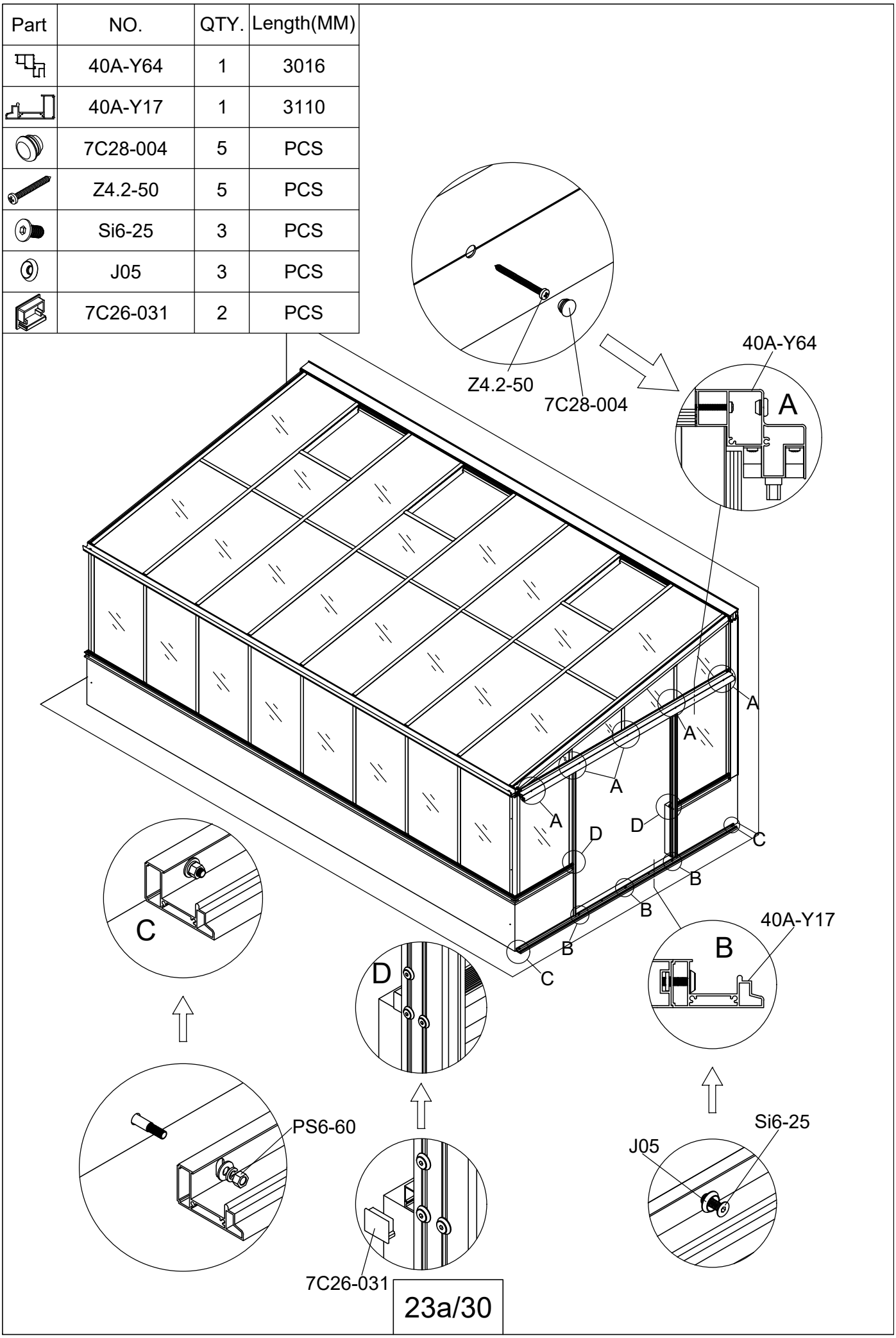

Part	NO.	QTY.	Length(MM)
	40A-Y98A-R	1	1855
	40A-Y98A-L	1	1855

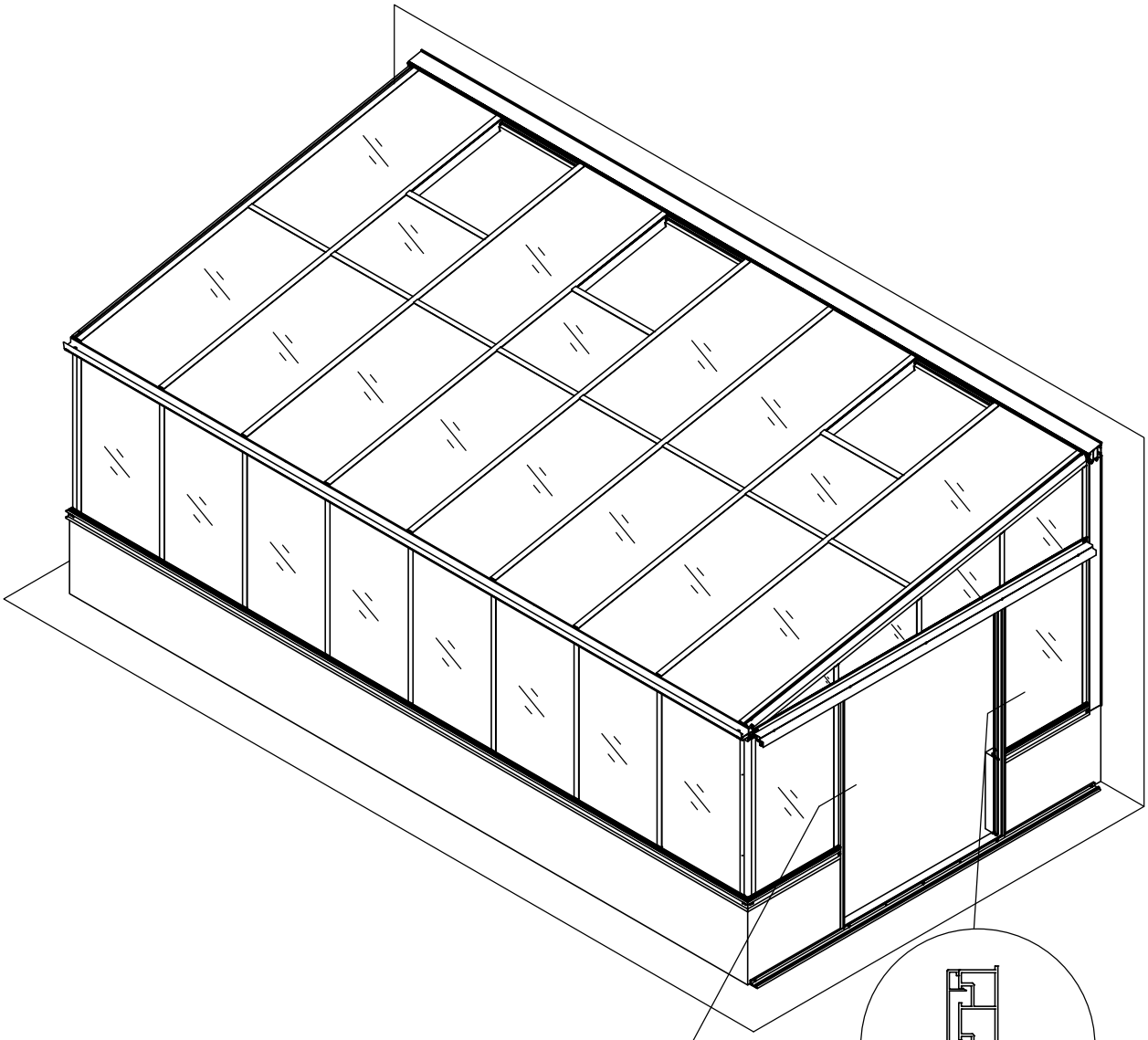

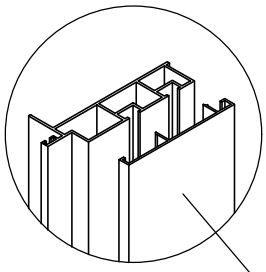

40A-Y98A-L

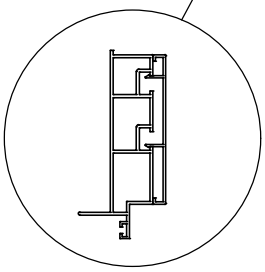

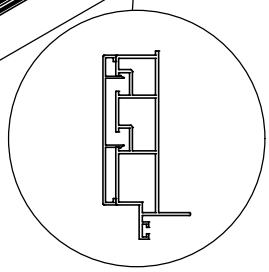

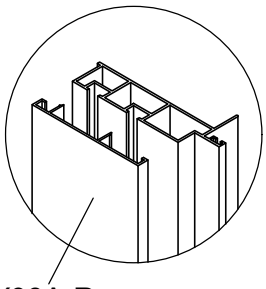

40A-Y98A-R

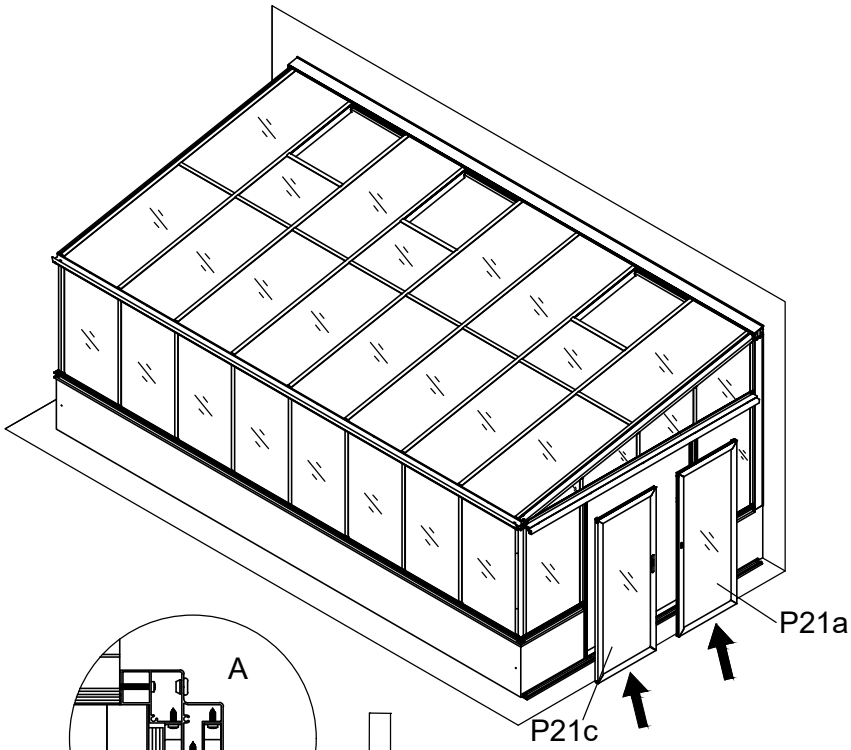

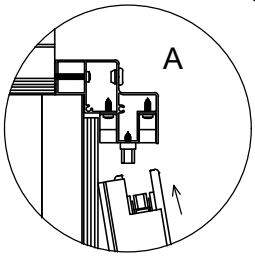

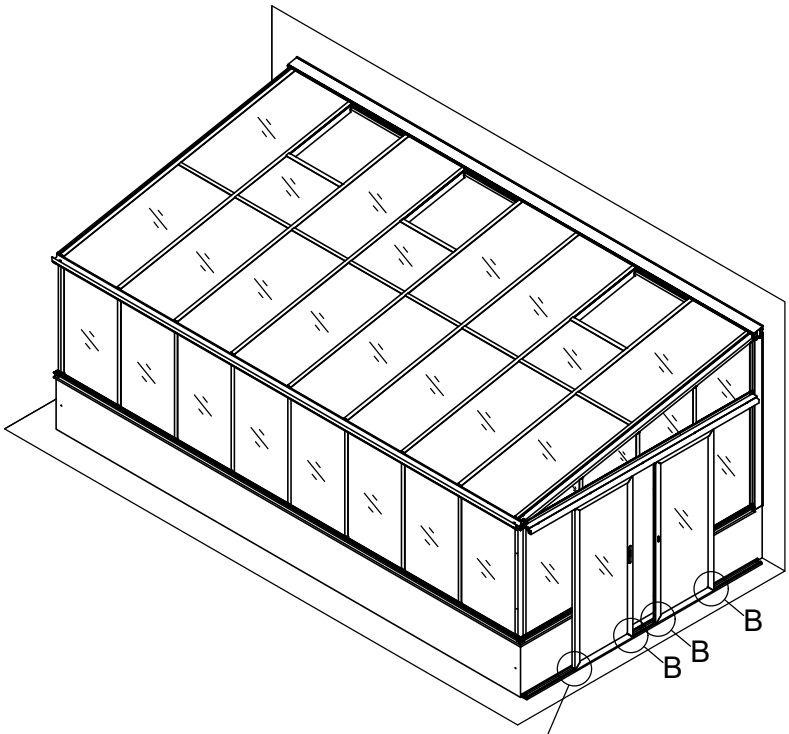

Adjust the height of the wheels
Justera höjden för hjulen
Juster højden af hjulene
Justere høyden for hjulene
Säädä alapyörien korkeus
Stellen Sie die Höhe der Räder ein.

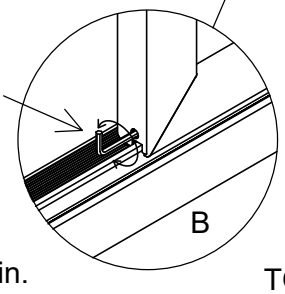

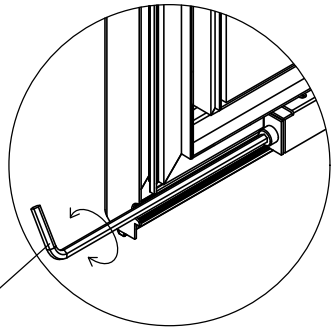

Part	NO.	QTY.	Length(MM)
	T01	1	PCS
	T01A	1	PCS
	J02	2	PCS
	7B26-039	2	PCS
	7B26-038	2	PCS
	M4-40	2	PCS
	Mi4-17	2	PCS
	Z3.5-25	4	PCS
	Z4.2-13	8	PCS

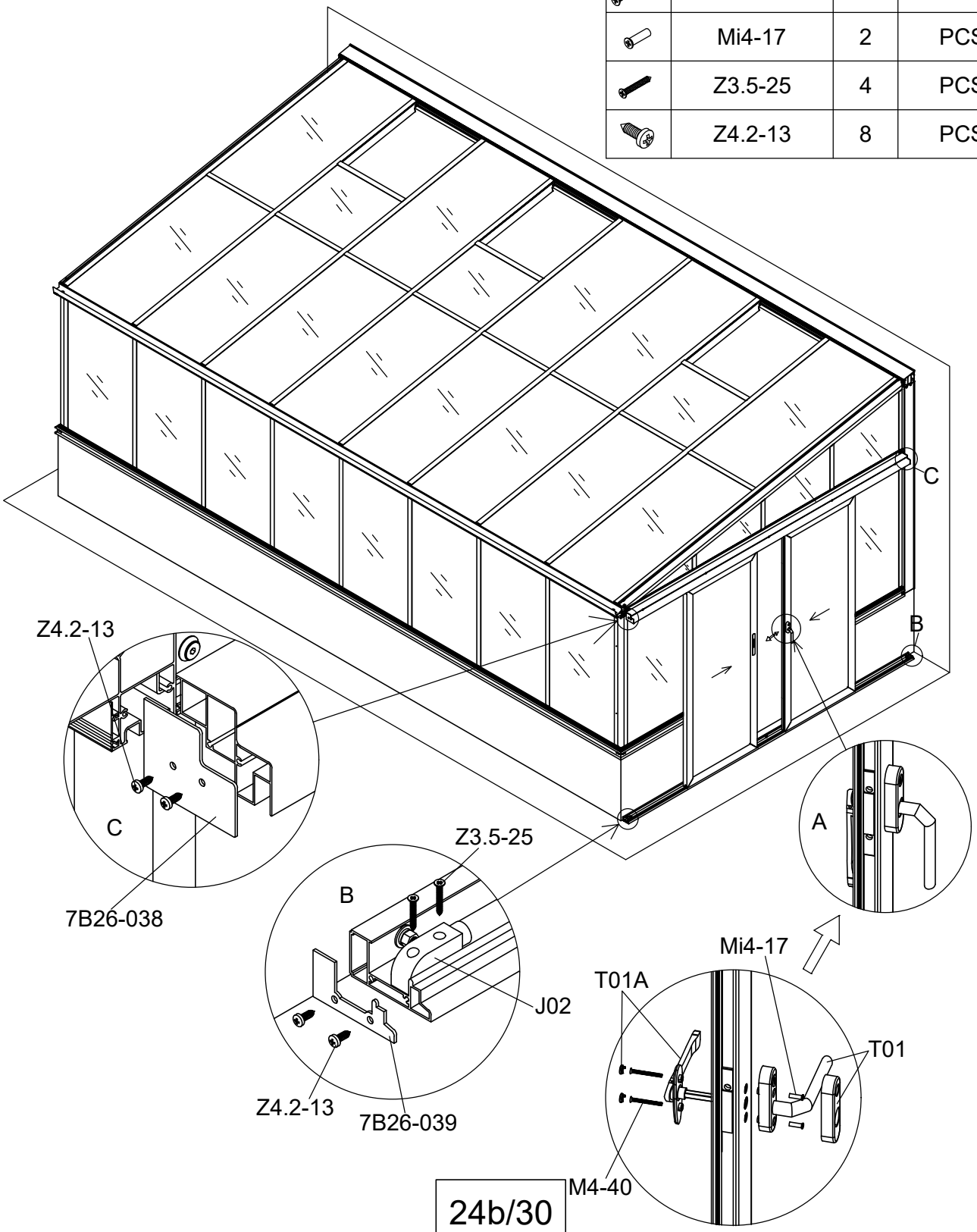

Part	NO.	QTY.					Length(MM)
		3181	3182	3183	3184	3185	
	40X-P80E-A	1	2	2	3	3	791
	40X-Y81E	2	4	4	6	6	882
	40X-Y82E	1	2	2	3	3	801
	W06	4	8	8	12	12	46
	W04	4	8	8	12	12	PCS
	782×863	1	2	2	3	3	863
	MCJT002	2	4	4	6	6	12

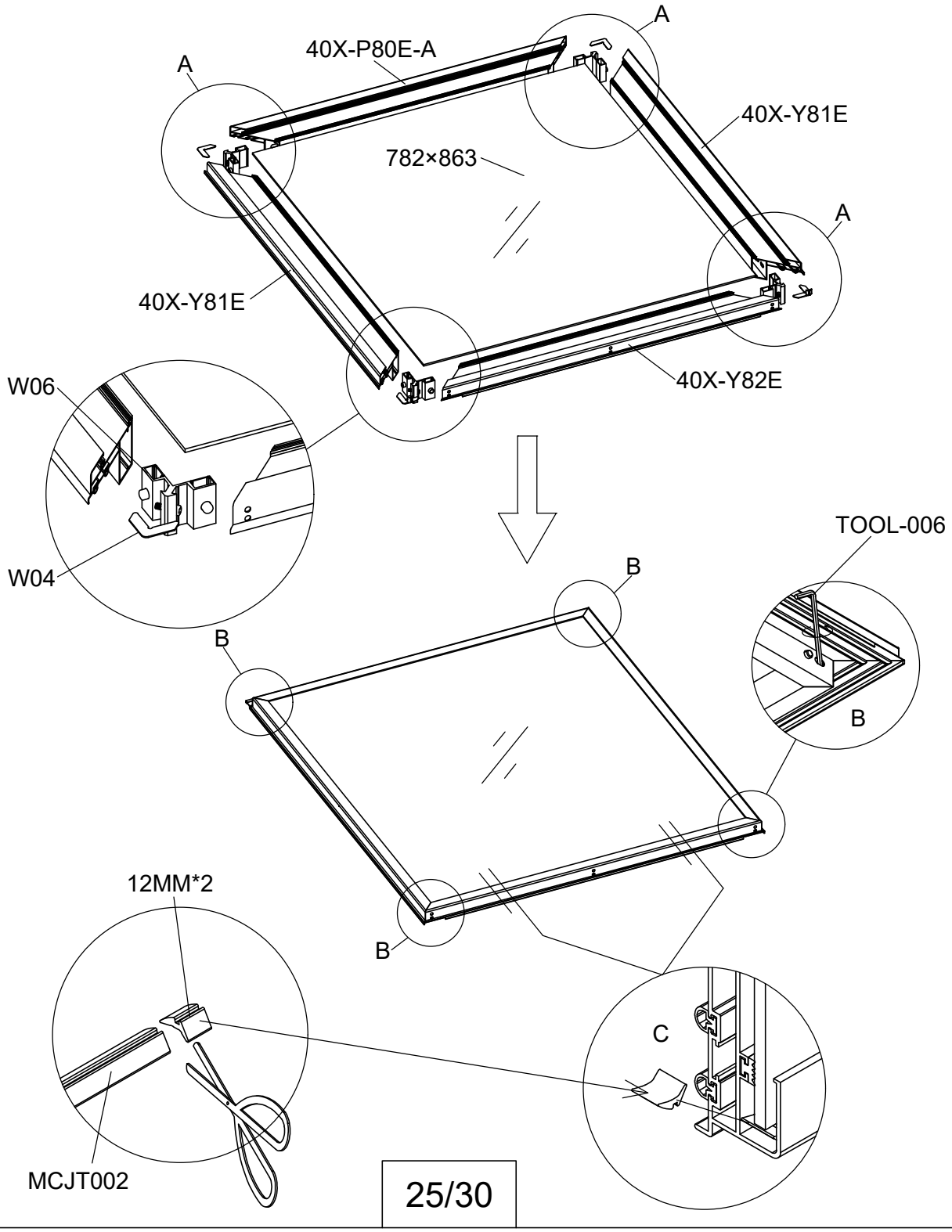

Part	NO.	QTY.					Length(MM)
		3181	3182	3183	3184	3185	
	MCJT002	3.5M	7M	7M	10.5M	10.5M	
	J09	8	16	16	24	24	PCS

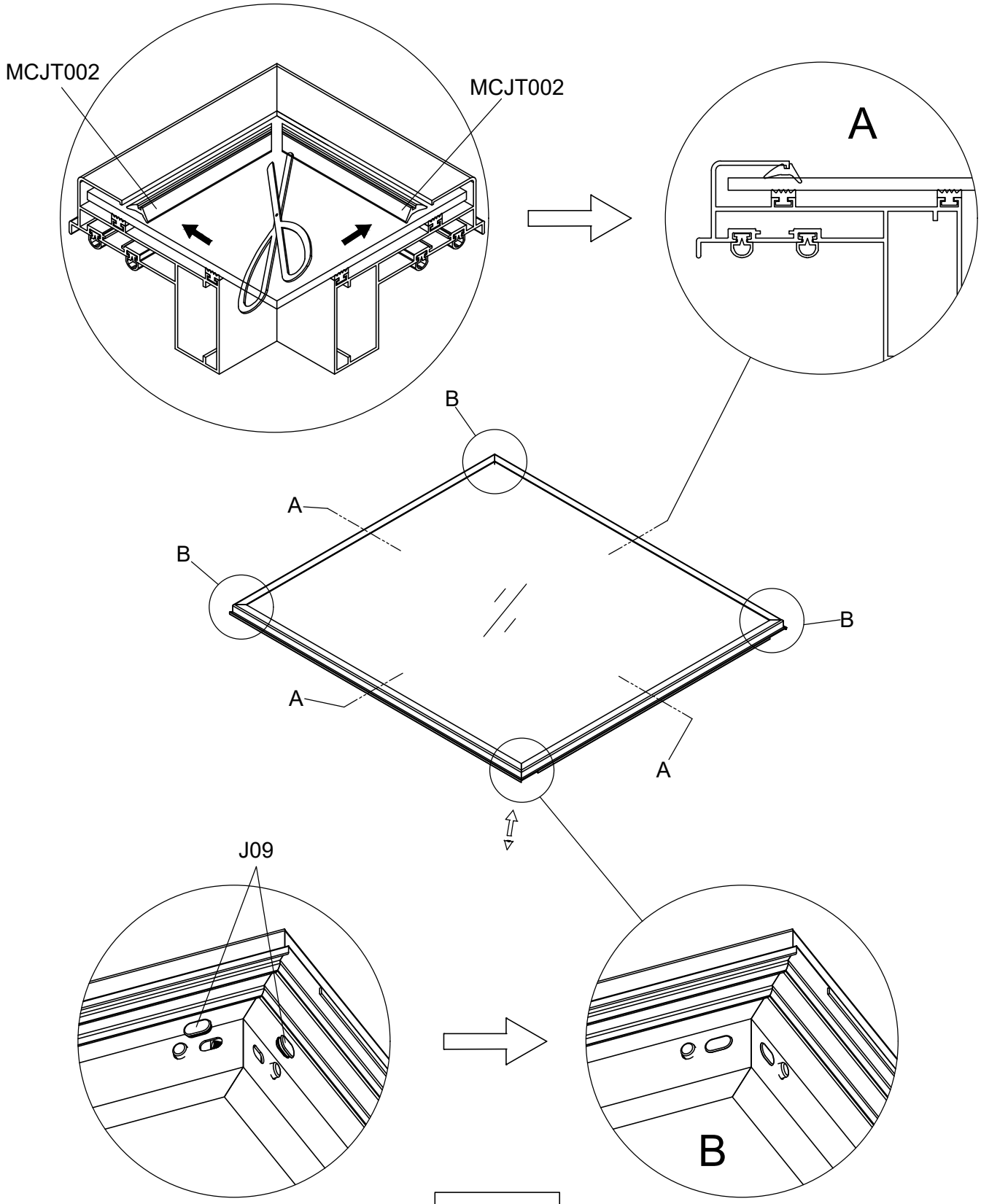

Part	NO.	QTY.					Length(MM)
		3181	3182	3183	3184	3185	
	Si6-16	4	8	8	12	12	PCS
	J05	4	8	8	12	12	PCS

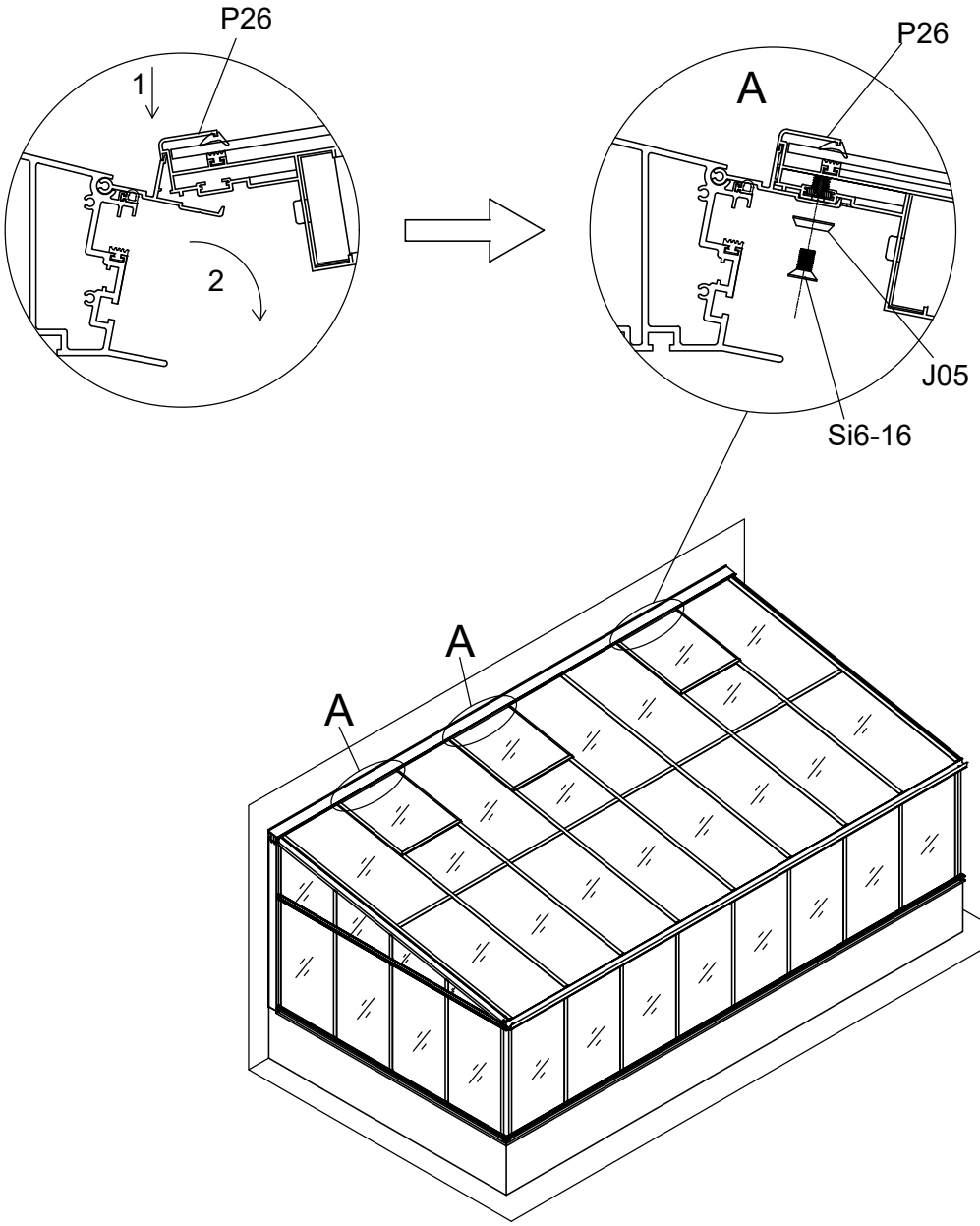

3181	3182	3183	3184	3185
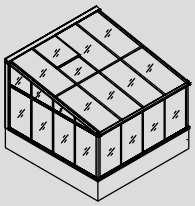	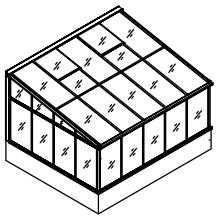	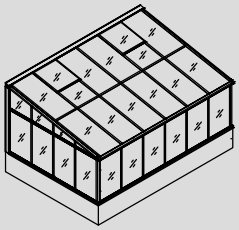	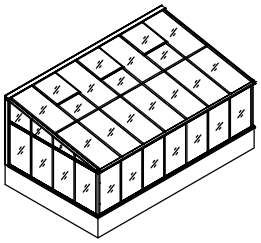	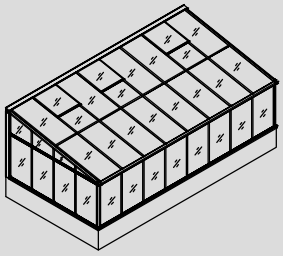

Part	NO.	QTY.	Length(MM)
	J08	1	PCS

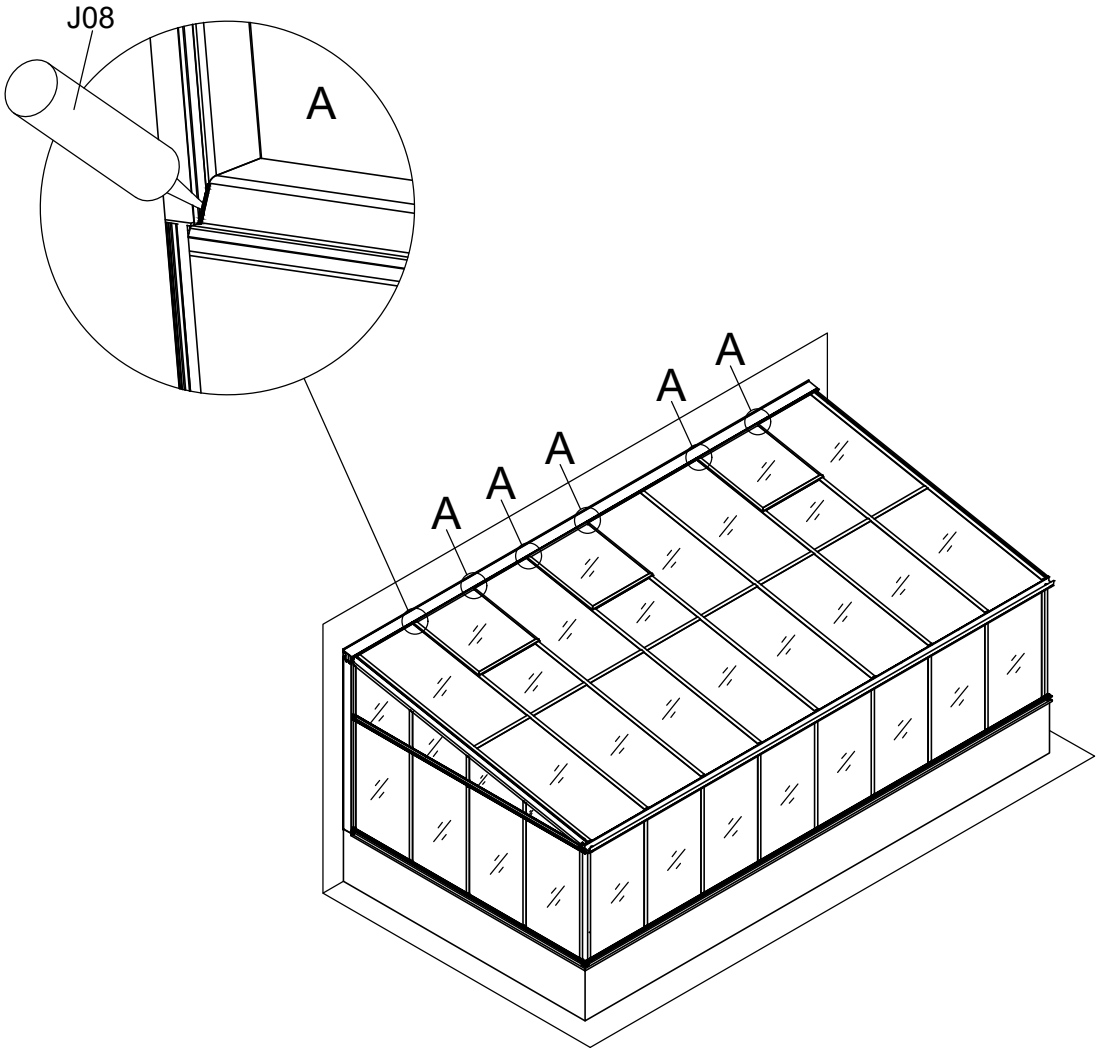

3181	3182	3183	3184	3185
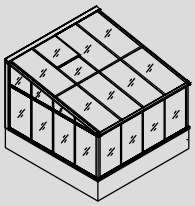	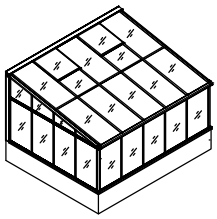	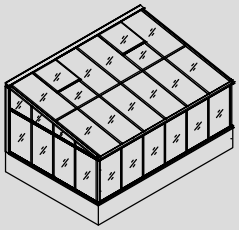	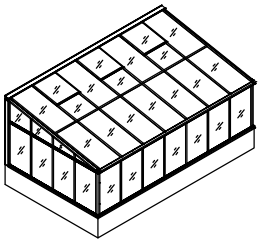	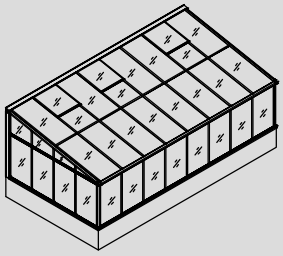

Part	NO.	QTY.	Length(MM)
	7C33-S02	2	PCS

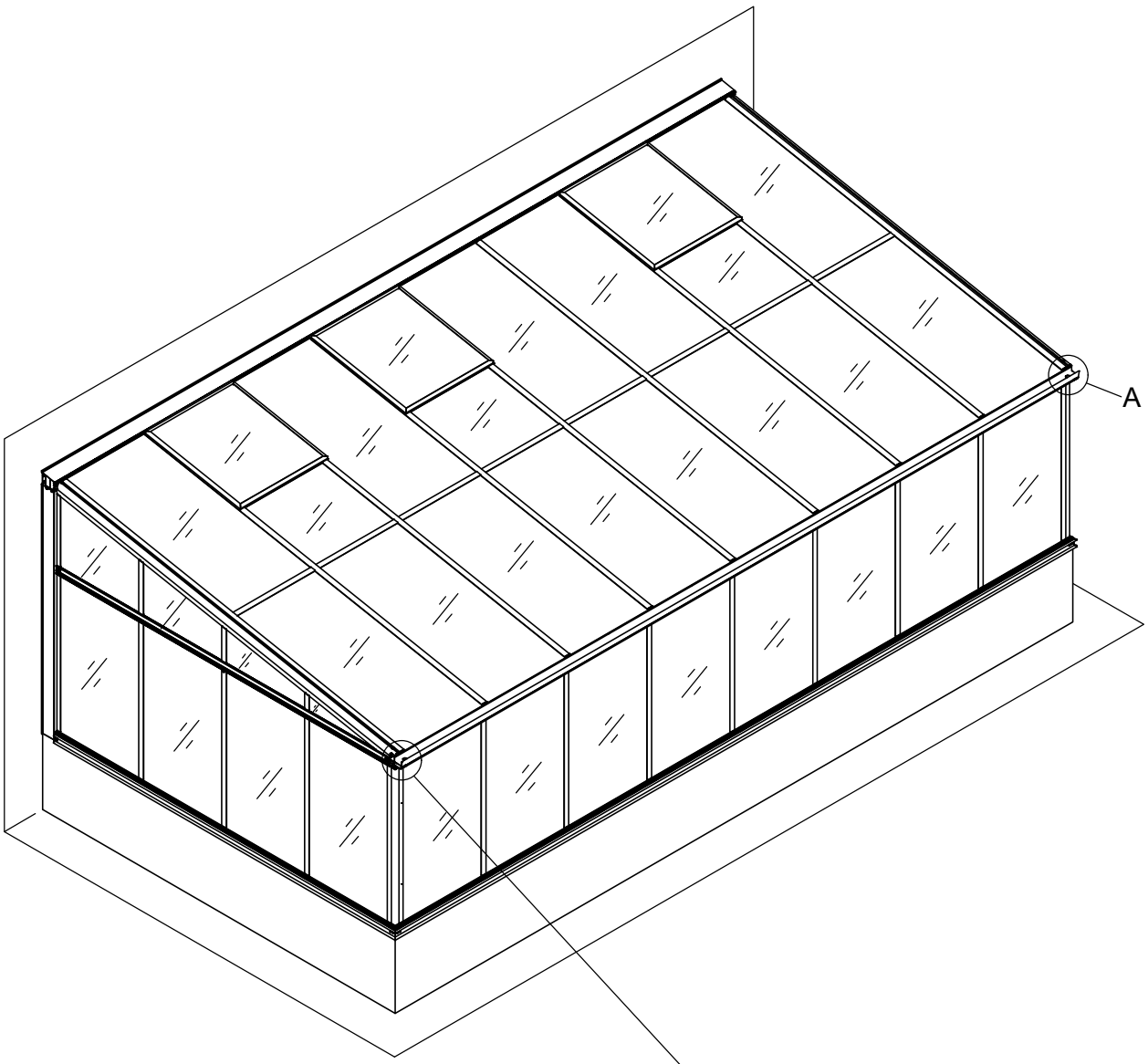

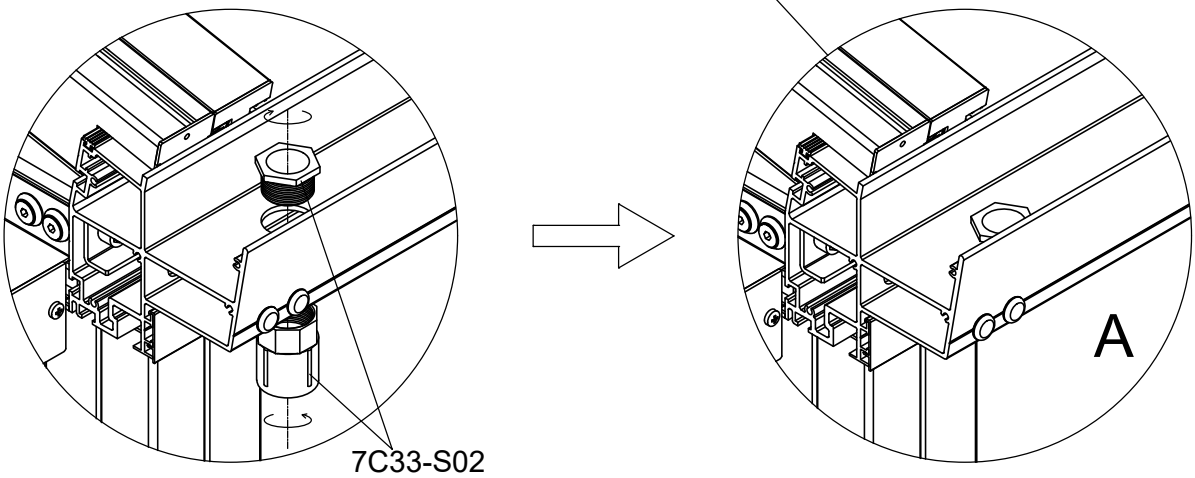

Part	NO.	QTY.	Length(MM)
	7C26-S01A	2	1900
	7C33-S03	4	PCS
	Z4.8-25	4	PCS
	7C33-S04	2	PCS
	J07-A	2	PCS
	J07-B	2	PCS

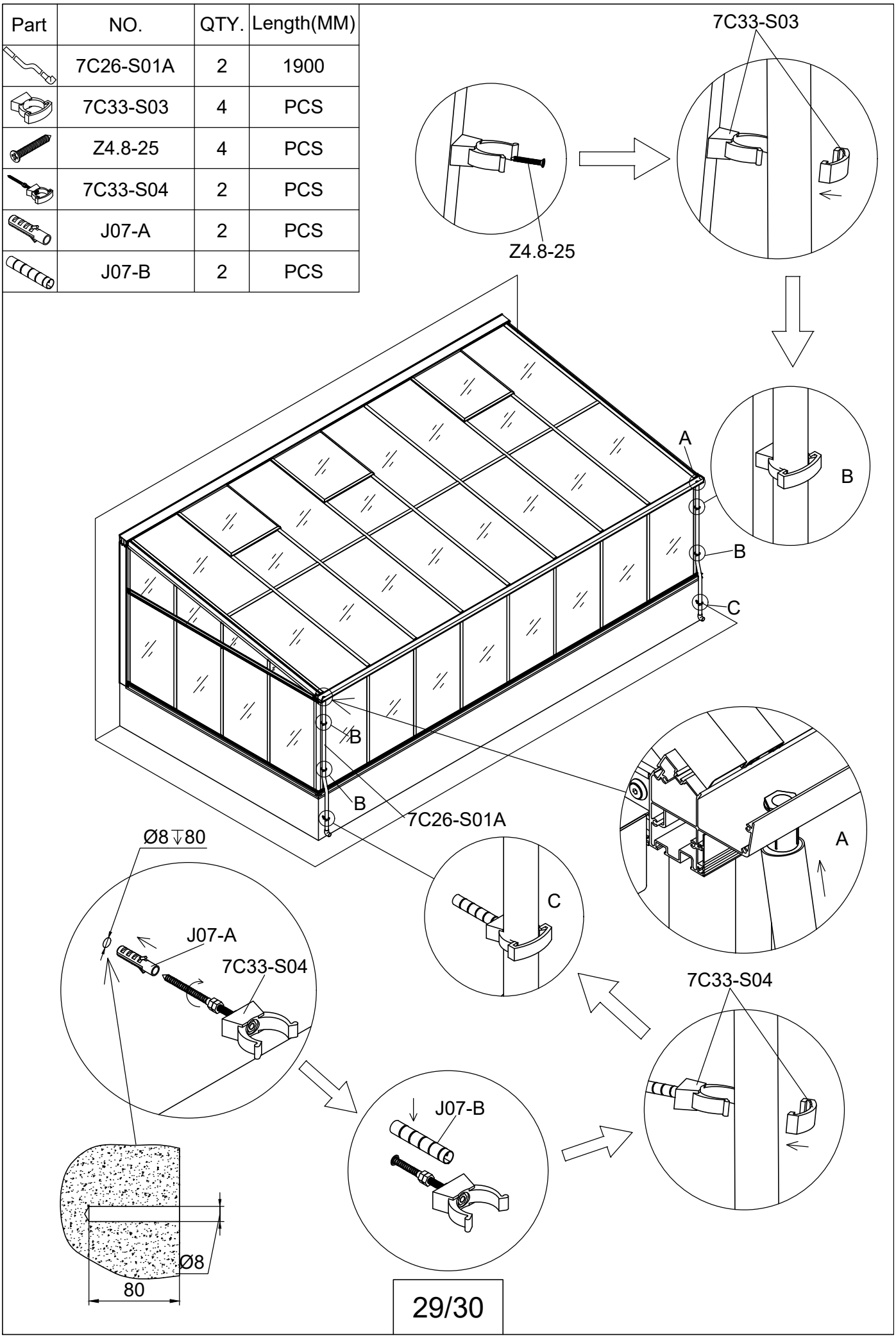

Part	NO.	QTY.	Length(MM)
	7B26-074	1	PCS
	7B26-073	1	PCS
	7C26-039	2	PCS
	Za4.2-13	10	PCS

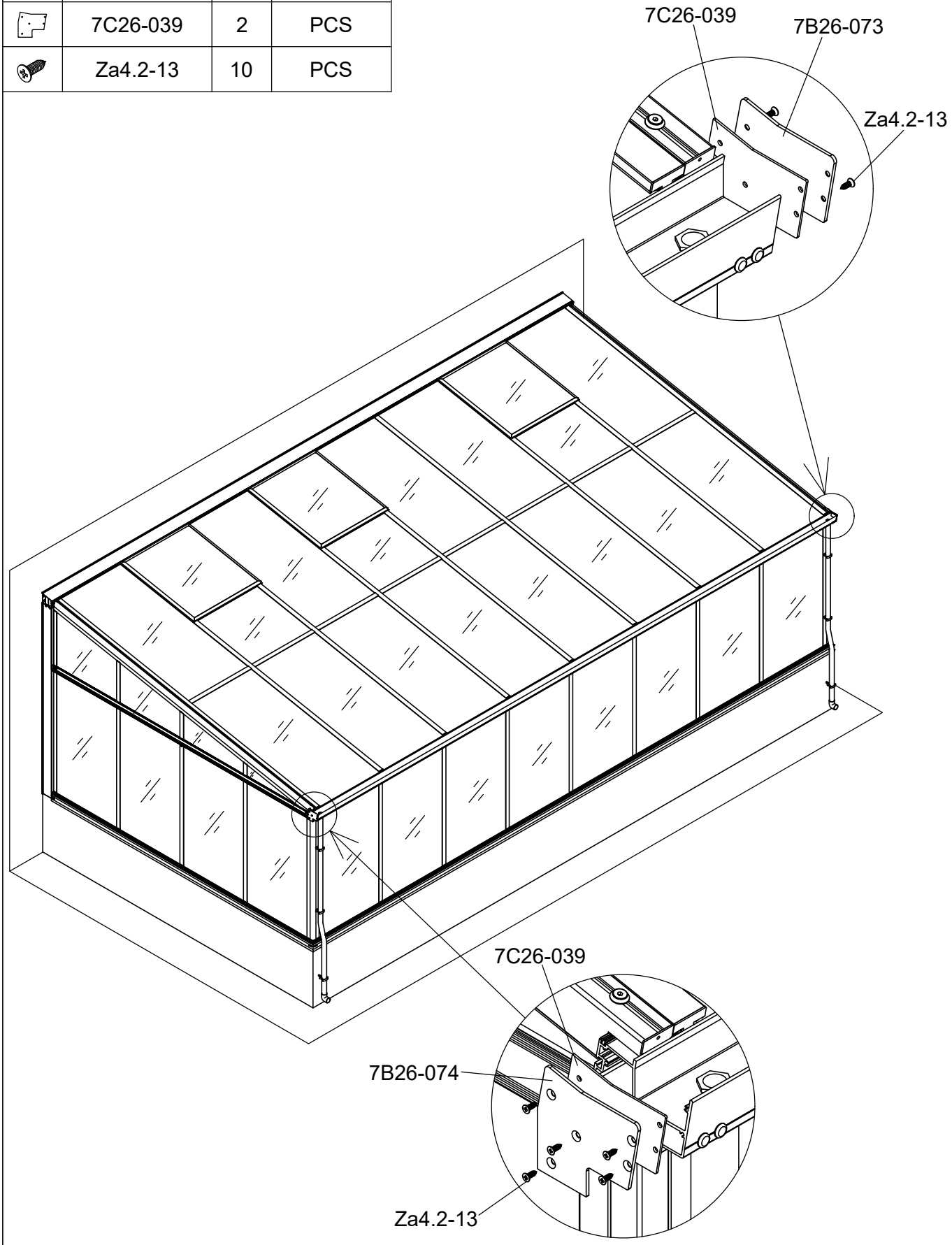

3181	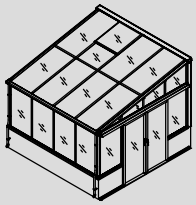
3182	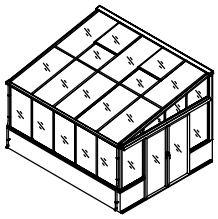
3183	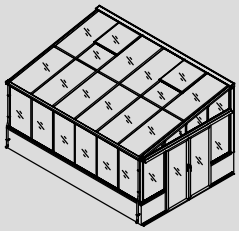
3184	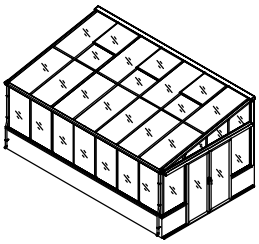
3185	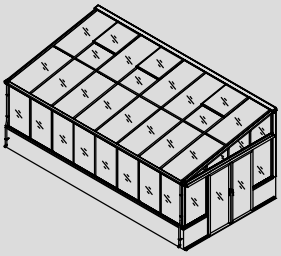

Part	NO.	QTY.	Length(MM)
	7B26-076	1	PCS
	7B26-075	1	PCS
	7C26-040	2	PCS
	Za4.2-13	8	PCS

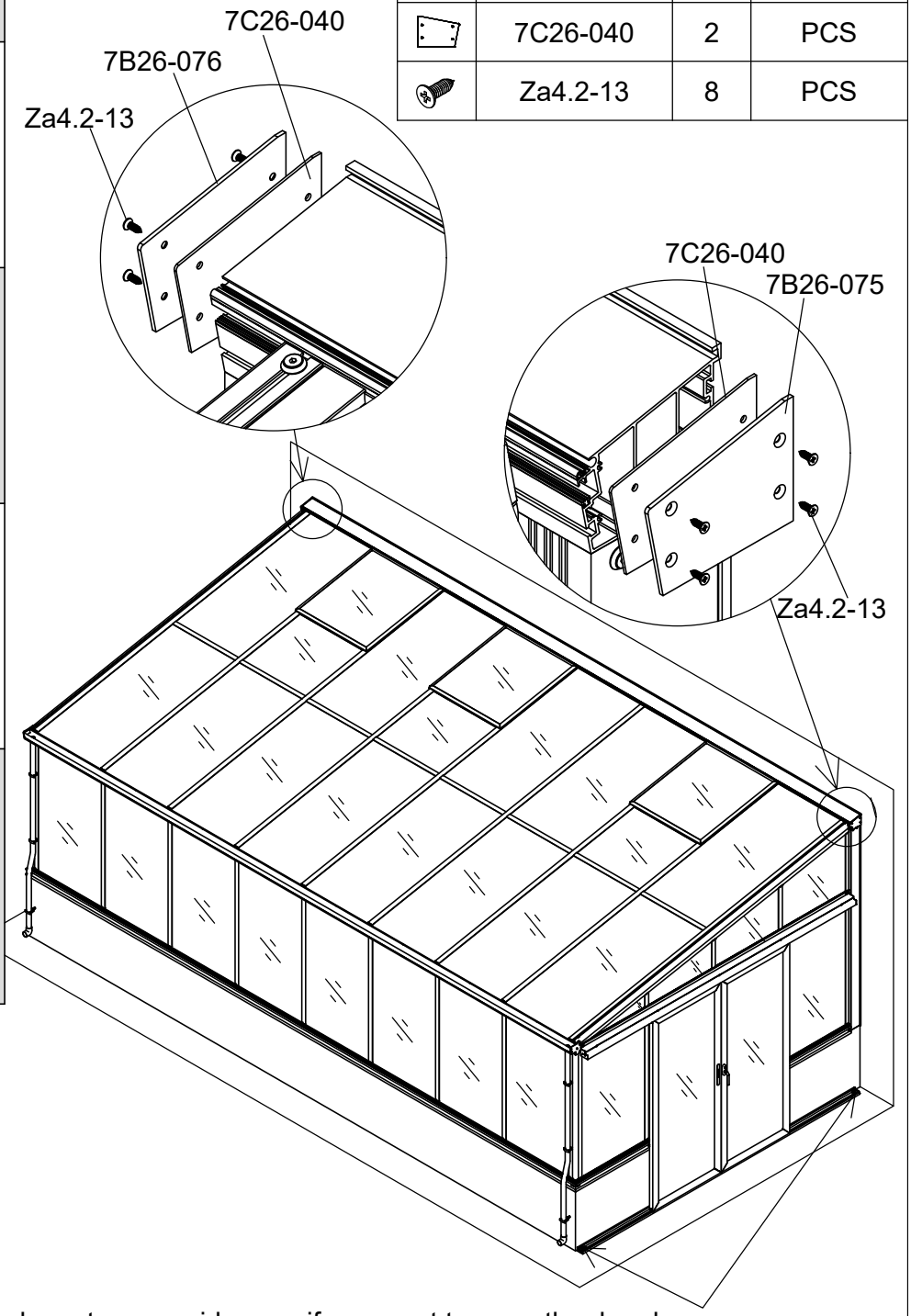

Adjust these door stoppers sideways if you want to open the door larger.
Justera avstånden av dörrstoppen i sidled om ni vill kunna öppna dörrarna ännu mer.
Justere dørstoppene sidelæns, for at give større åbning af døren.
Juster avstanden av dørstopperen sideveis om du vil kunne åpne døren ennå mer.
Säädä liukuovien stoppareiden etäisyys sivusuunnassa, mikäli haluat ovien avautuvan enemmän.
Stellen Sie den Türstopper seitlich ein, wenn Sie die Tür größer öffnen möchten.

Part	Product	NO.	Length(MM)	CTN NO.	Code
	3181	40A-Y11-4	3173	3171P-S-BASE4	
	3182	40A-Y11-5	3924	3171P-S-BASE5	
	3183	40A-Y11-6	4675	3171P-S-BASE6	A001
	3184	40A-Y11-7	5426	3171P-S-BASE7	
	3185	40A-Y11-8	6177	3171P-S-BASE8	

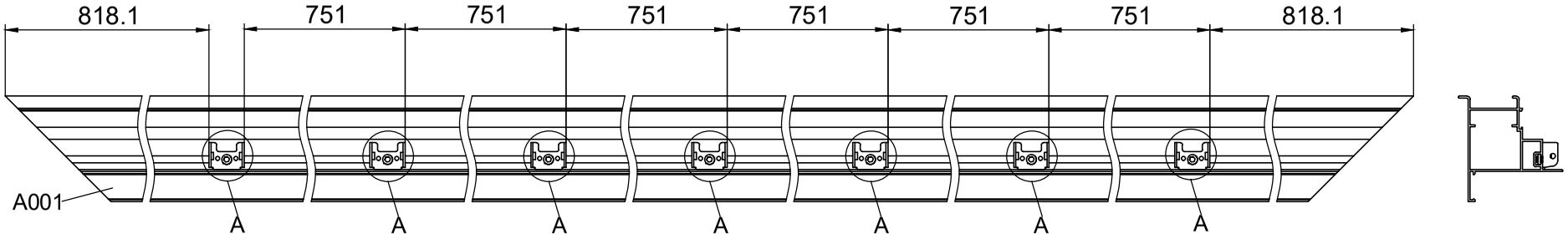

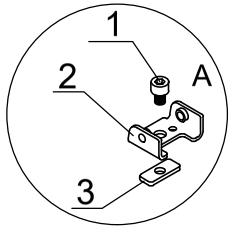

NO.	
1	M6-8
2	7B26-011
3	7B26-025

F1

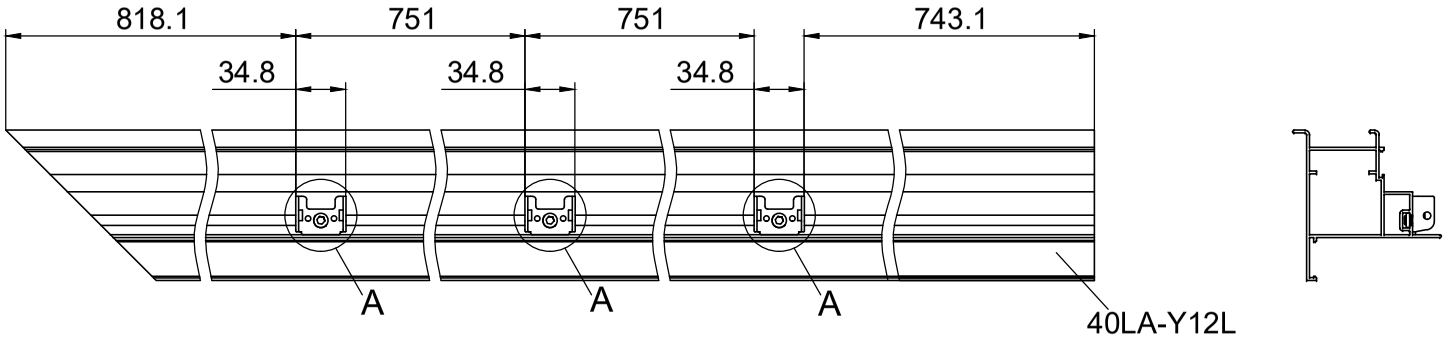

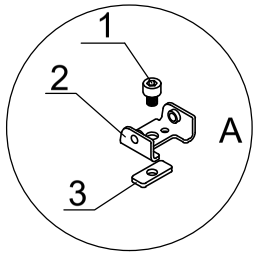

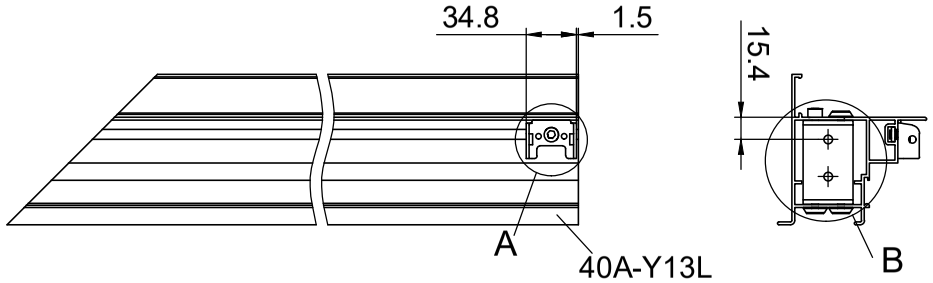

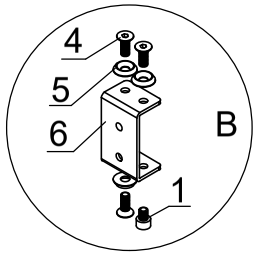

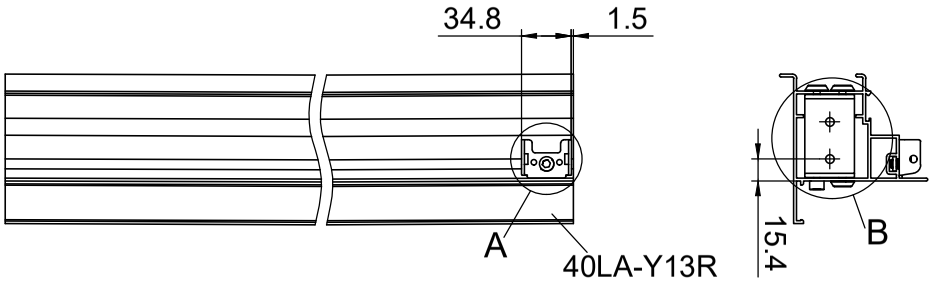

NO.	
1	M6-8
2	7B26-011
3	7B26-025
4	Si6-16
5	J05
6	7B26-037A

F2

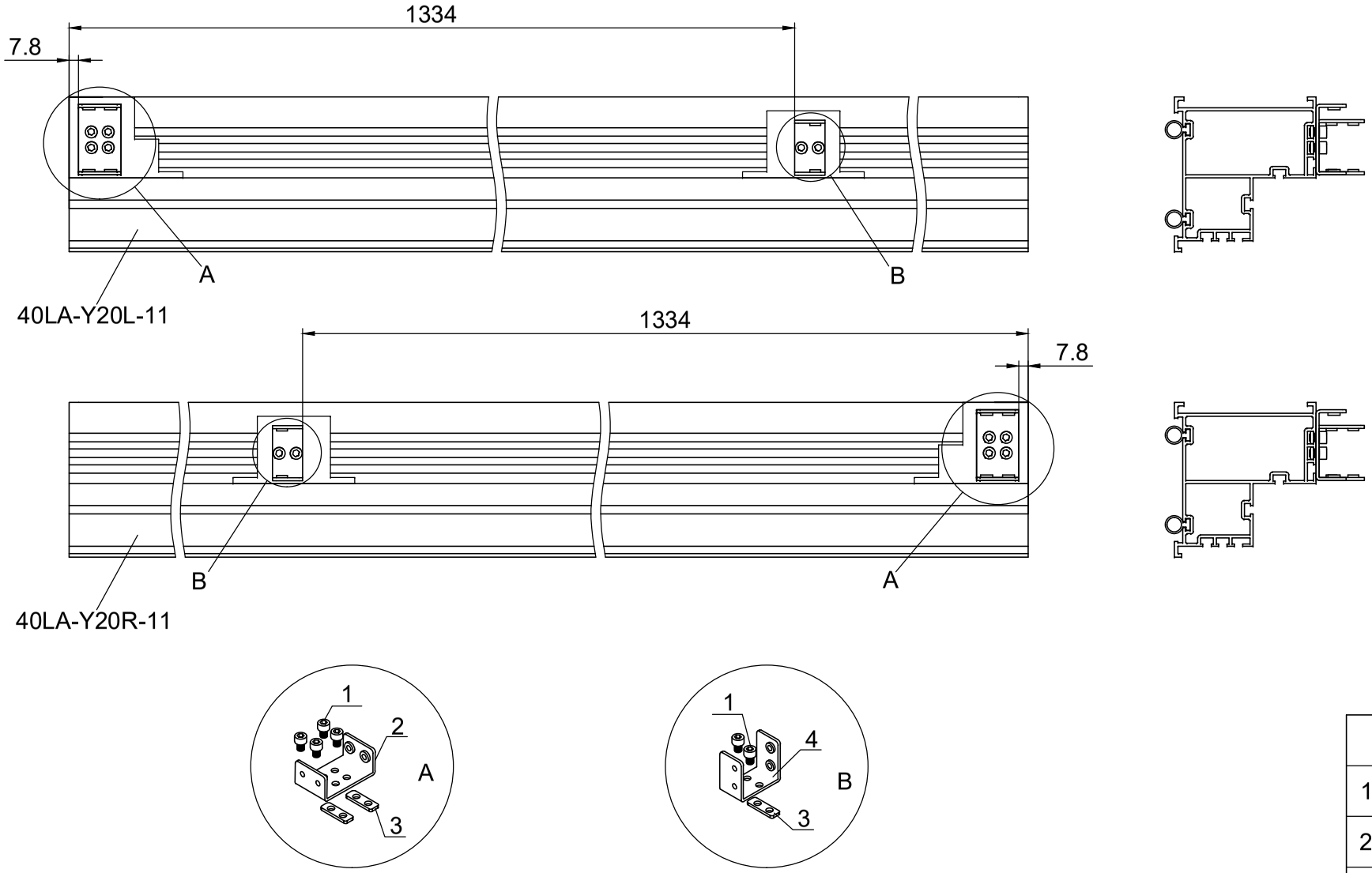

NO.	
1	M6-10
2	7B26-082
3	7B26-033
4	7B26-057

F3

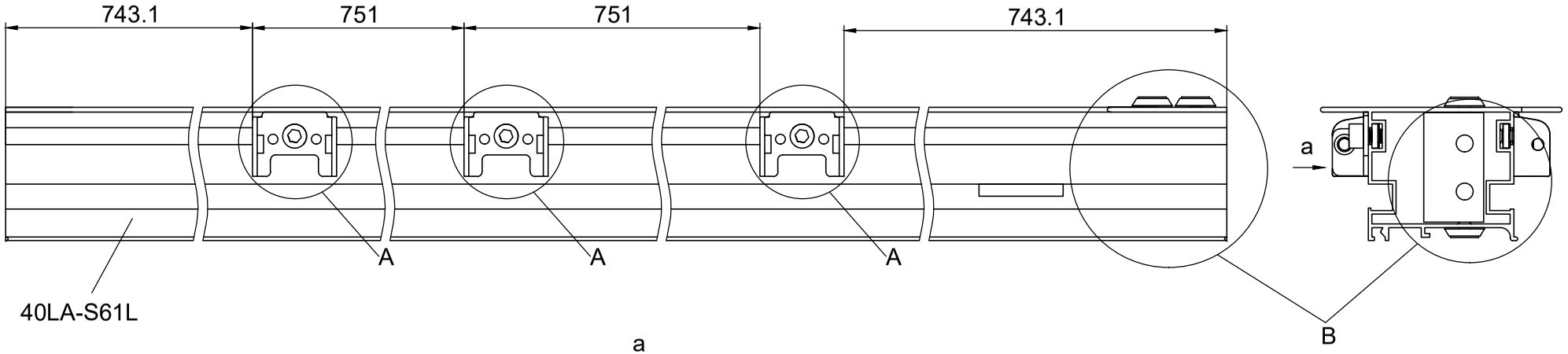

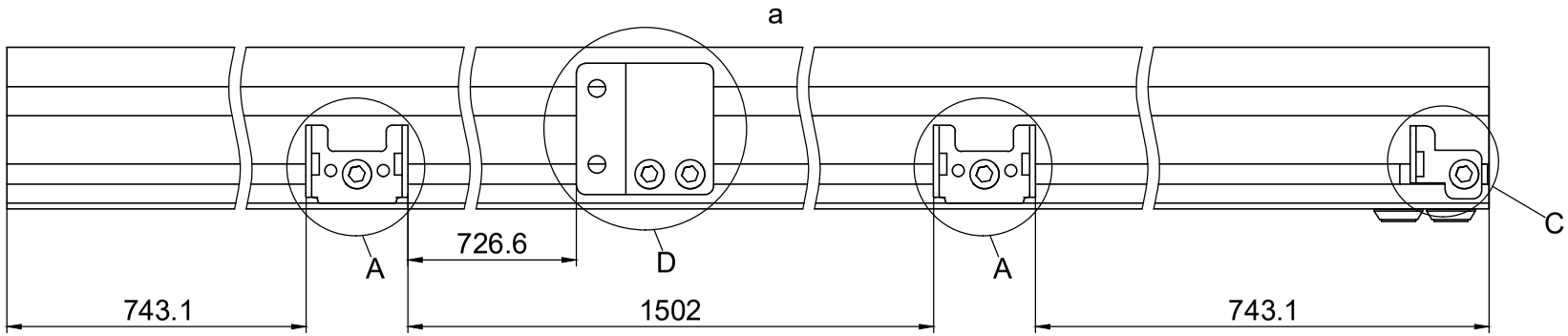

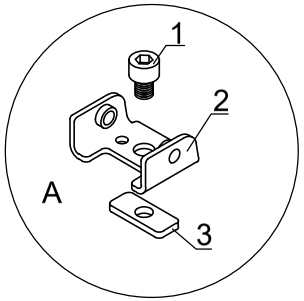

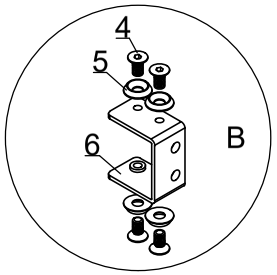

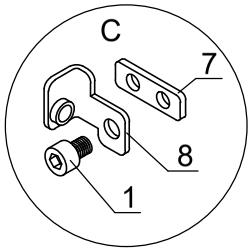

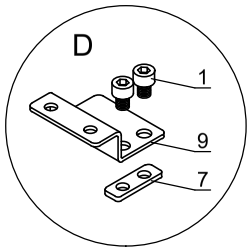

NO.	
1	M6-8
2	7B26-011
3	7B26-025
4	Si6-12
5	J05
6	7B26-056
7	7B26-033
8	7B26-027
9	7B26-036

F4

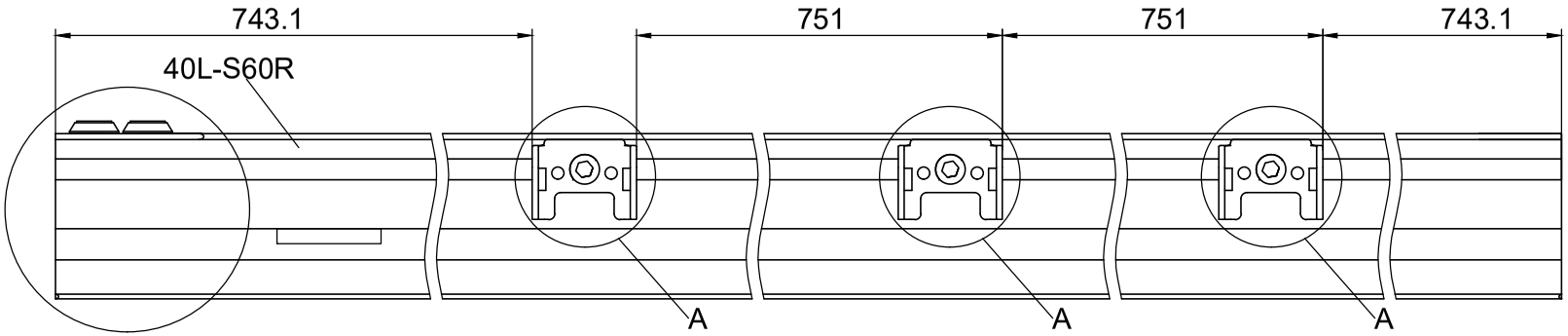

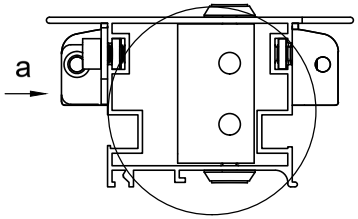

a

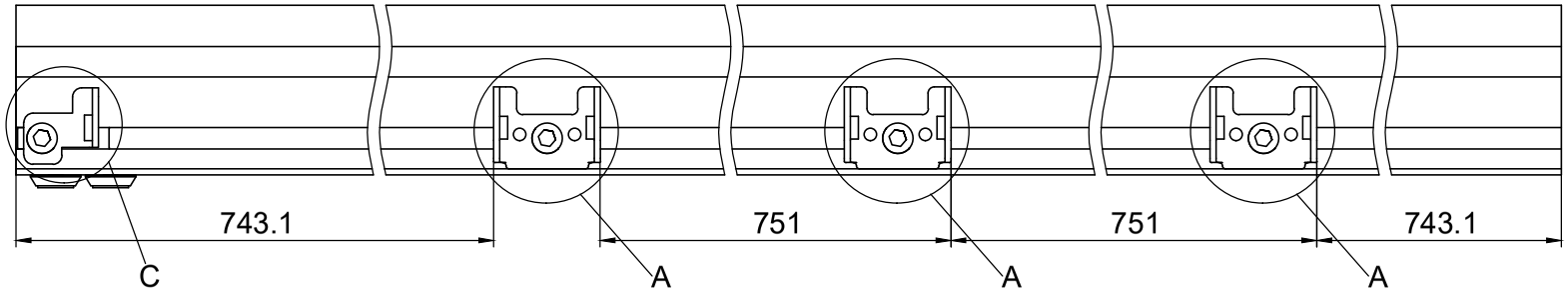

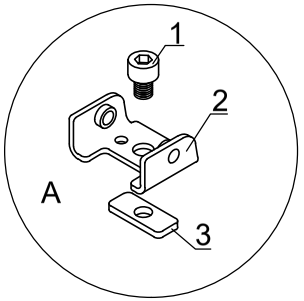

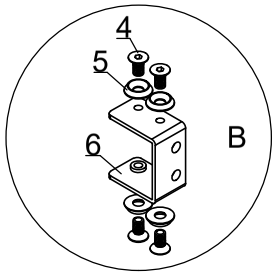

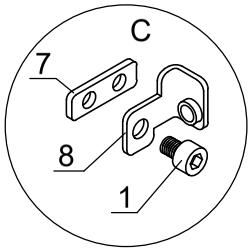

NO.	
1	M6-8
2	7B26-011
3	7B26-025
4	Si6-12
5	J05
6	7B26-056
7	7B26-033
8	7B26-026

F5

Part	Product	NO.	Length(MM)	Code
	3181	40L-Y62-4-11	3134	A003
	3182	40L-Y62-5-11	3885	
	3183	40L-Y62-6-11	4636	
	3184	40L-Y62-7-11	5387	
	3185	40L-Y62-8-11	6138	

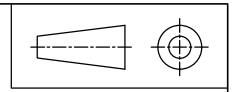

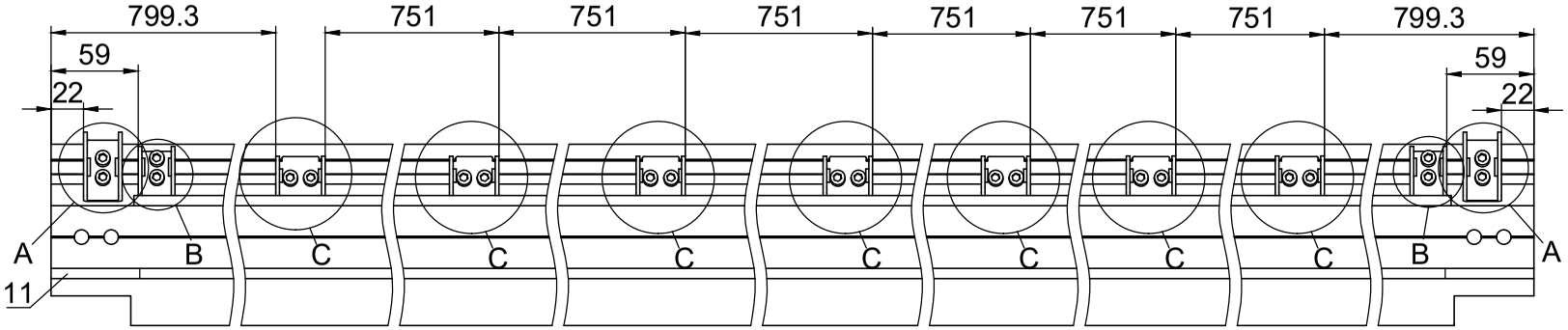

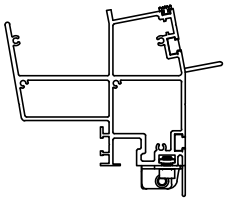

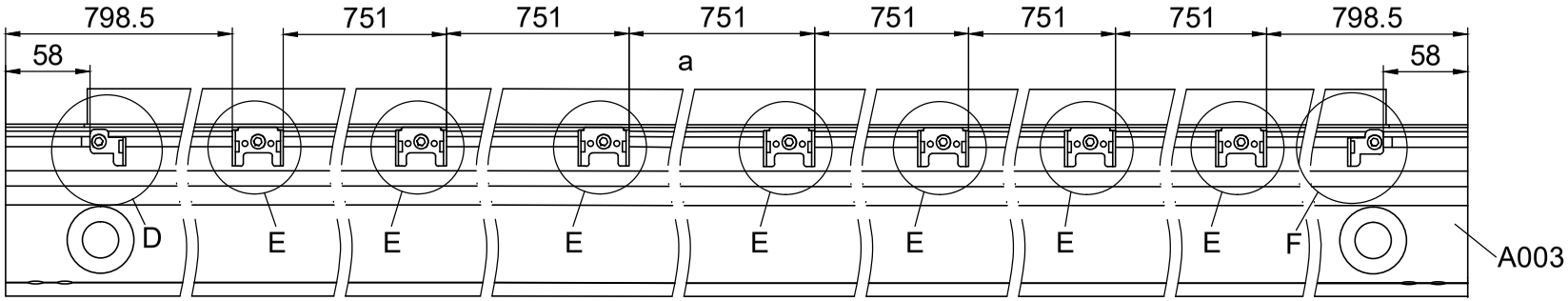

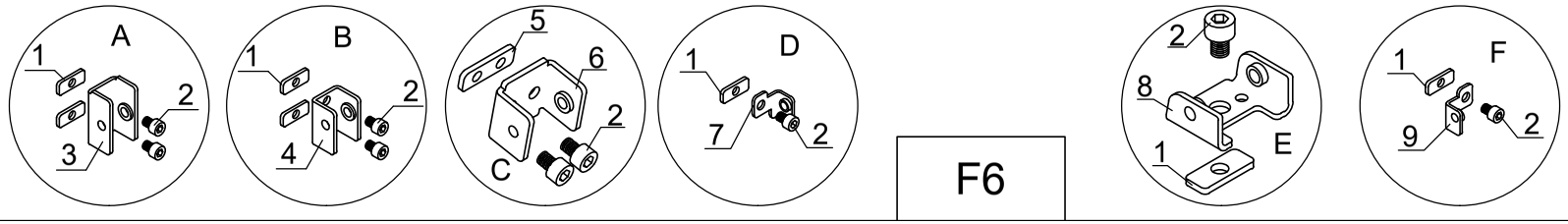

F6

	NO.
1	7B26-025
2	M6-8
3	7B26-086
4	7B26-087
5	7B26-033
6	7B26-062
7	7B26-027
8	7B26-011
9	7B26-026

Part	Product	NO.	Length(MM)	Code
	3181	40LA-Y63-4-11	3157	A004
	3182	40LA-Y63-5-11	3908	
	3183	40LA-Y63-6-11	4659	
	3184	40LA-Y63-7-11	5410	
	3185	40LA-Y63-8-11	6161	

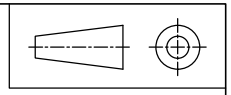

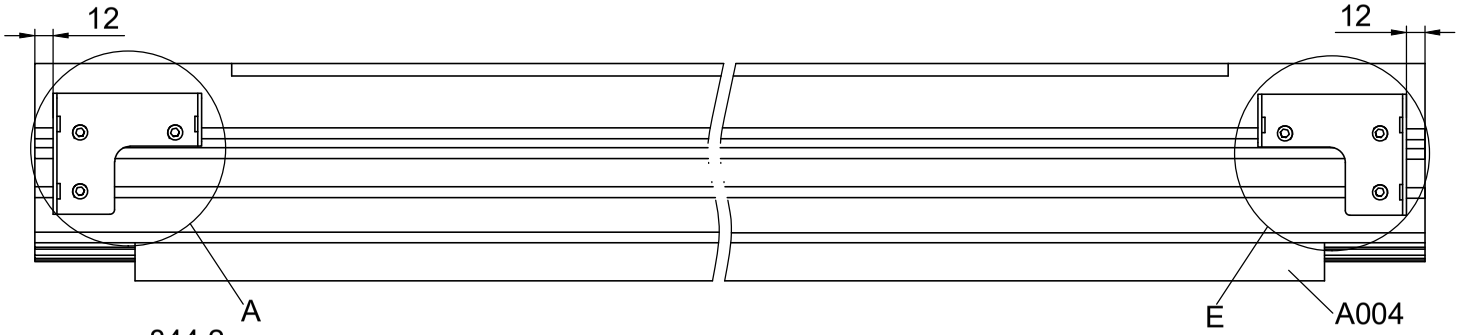

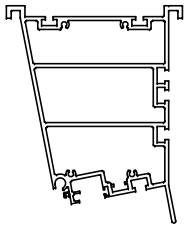

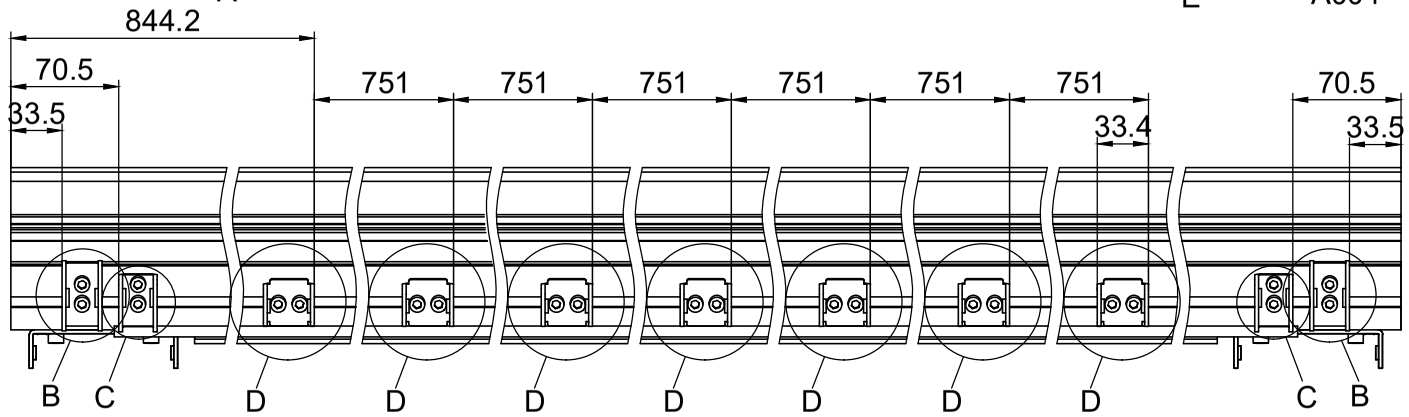

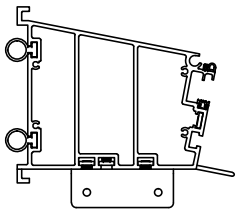

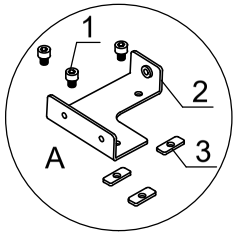

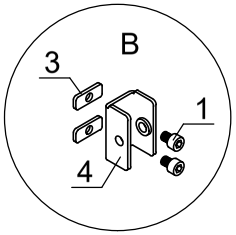

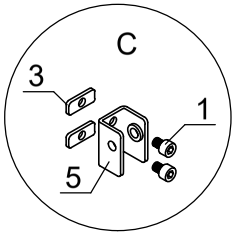

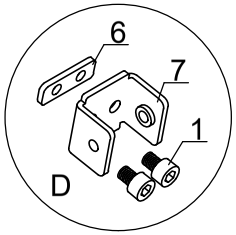

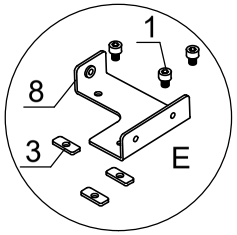

F7

NO.	
1	M6-10
2	7B26-081
3	7B26-025
4	7B26-087
5	7B26-086
6	7B26-033
7	7B26-062
8	7B26-080

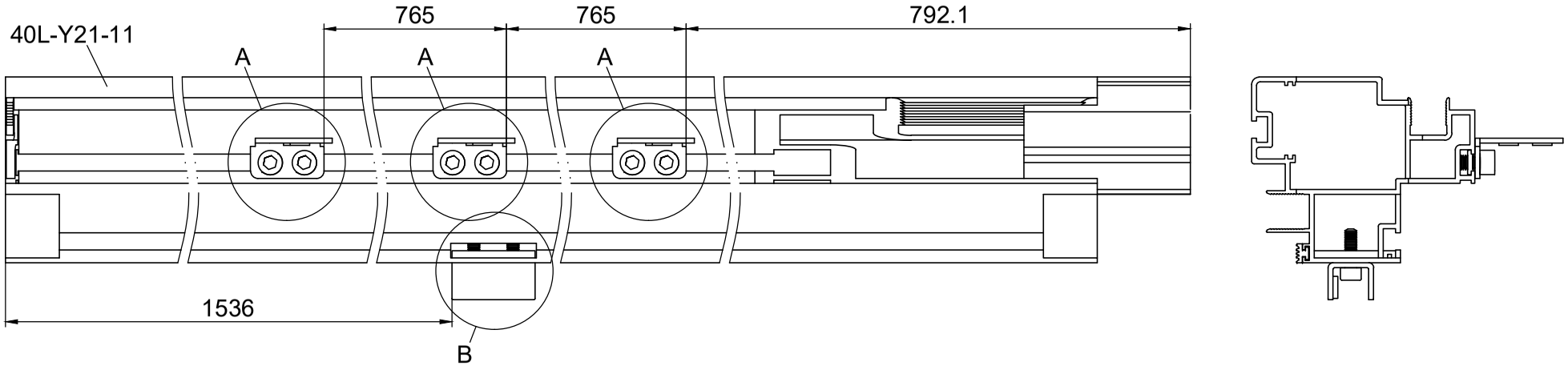

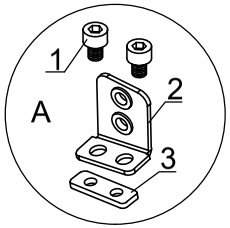

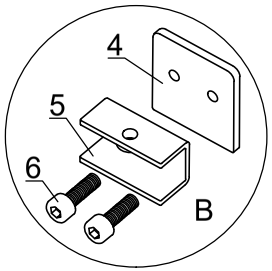

NO.	
1	M6-8
2	7B26-046R
3	7B26-033
4	7B26-079
5	7B26-078
6	Si5-16

F8

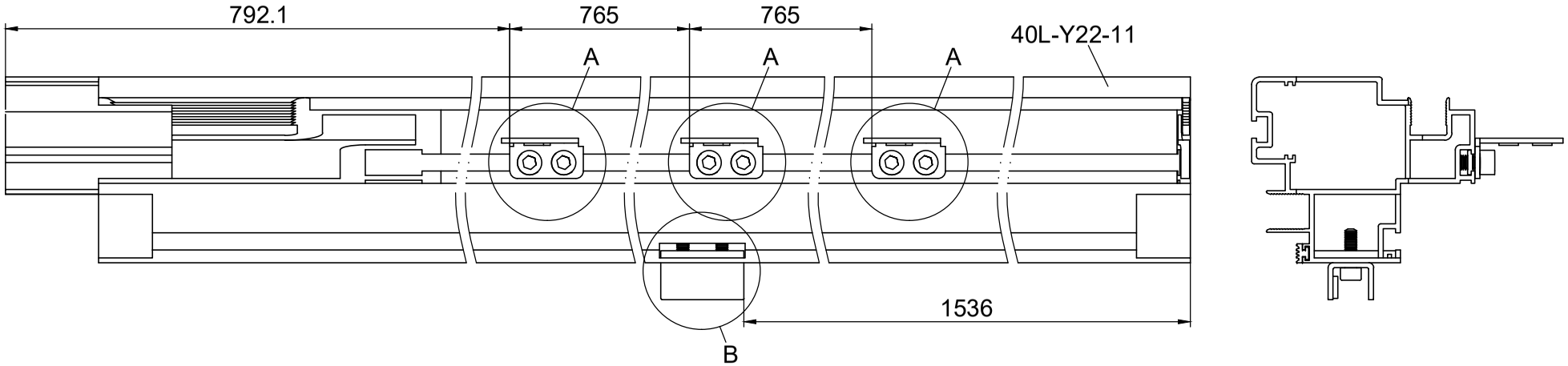

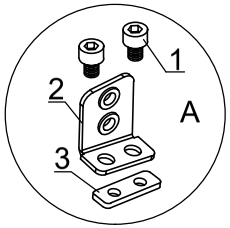

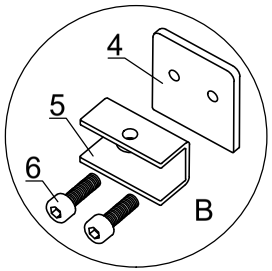

NO.	
1	M6-8
2	7B26-046L
3	7B26-033
4	7B26-079
5	7B26-078
6	Si5-16

F9

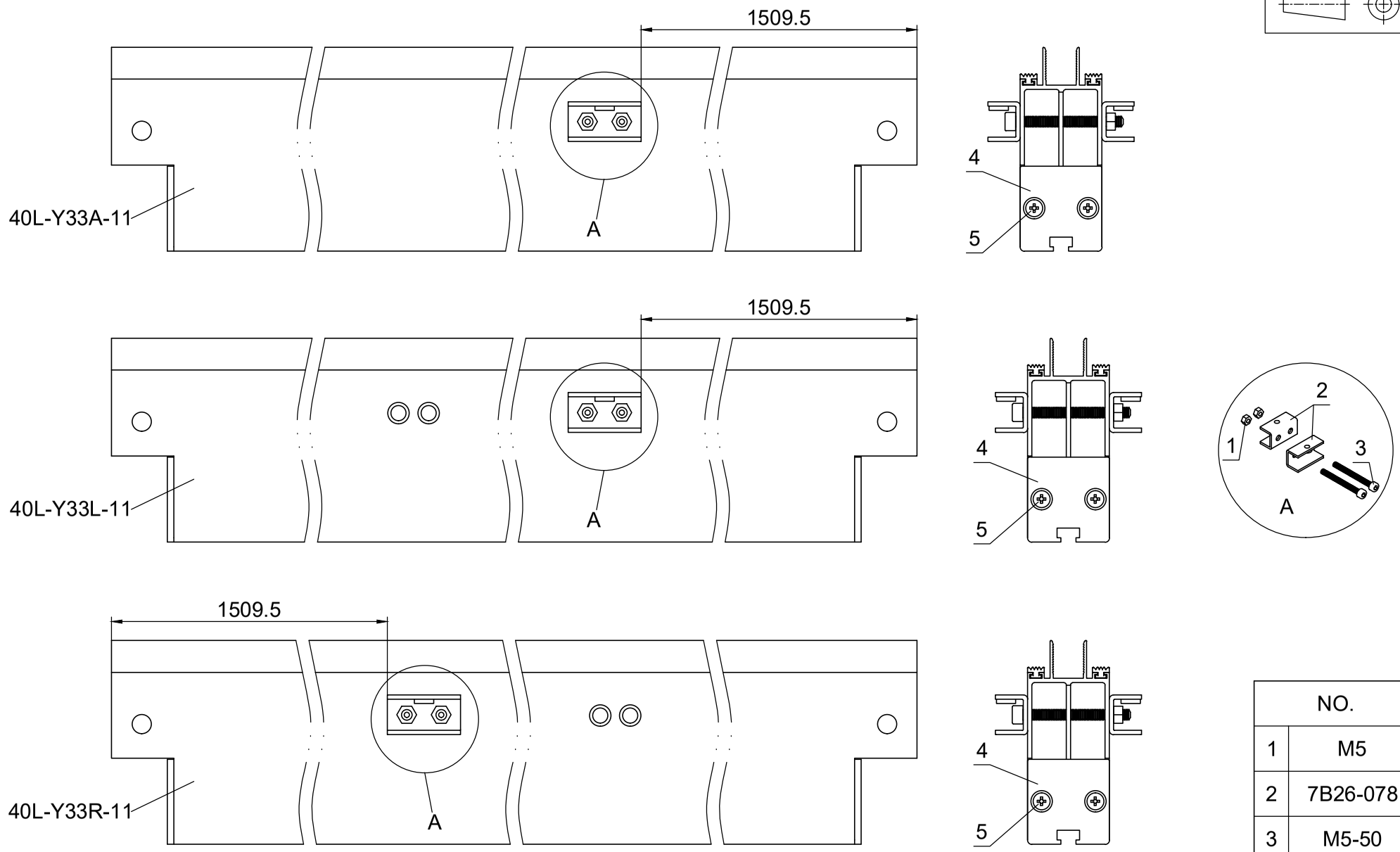

NO.	
1	M5
2	7B26-078
3	M5-50
4	7B26-071
5	Za4.2-13

F10