Green Room®

BY WILLAB GARDEN

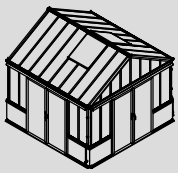	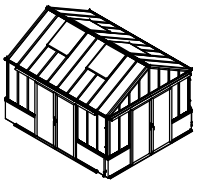	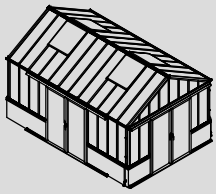	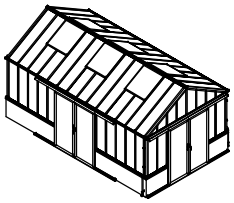	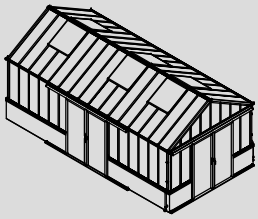
3051-XDL	3052-XDL	3053-XDL	3058-XDL	3059-XDL
314×314×290 cm	389×314×290 cm	464×314×290 cm	539×314×290 cm	614×314×290 cm

Product size (L×W×H):
Storlek (L×B×H):
Størrelse (L×B×H):
Størrelse (L×B×H):
Koko (P×L×K):
Produktgröße (L×B×H):

Please read carefully before assembling.
Two people are needed.

Läs noggrant innan montering.
Det krävs två personer för montering.

Læs venligst omhyggeligt, før montering.
Der kræves to personer til montering.

Les monteringsanvisningen nøye innen montering.
Det kreves to personer for montering.

Lue ohjeet huolellisesti läpi ennen asentamista.
Asentamiseen tarvitaan kaksi henkilöä.

Bitte vor dem Aufbau sorgfältig lesen.
Zwei Personen werden benötigt.

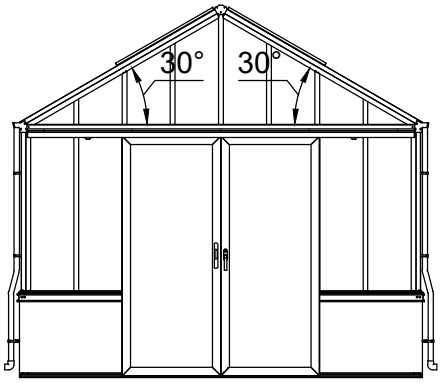

260106

Part	3051		3052		3053		3058		3059		QTY.	Code	Page
	NO.	Length(MM)	NO.	Length(MM)	NO.	Length(MM)	NO.	Length(MM)	NO.	Length(MM)			
	40X-Y62-4NR	3132	40X-Y62-5NR	3883	40X-Y62-6NR	4634	40X-Y62-7NR	5385	40X-Y62-8NR	6136	1	A003	P4
	40A-Y62-4NL	3132	40A-Y62-5NL	3883	40A-Y62-6NL	4634	40A-Y62-7NL	5385	40A-Y62-8NL	6136	1	A004	P4
	40X-Y63-4	3118	40X-Y63-5	3869	40X-Y63-6	4620	40X-Y63-7	5371	40X-Y63-8	6122	1	A005	P6

Part	NO.	QTY.					Length (MM)	Code	Page
		3051	3052	3053	3058	3059			
	40A-Y30	10	13	14	17	18	1235		P5
	40X-Y33R	2	4	4	0	0	1716	A015	P8
	40X-Y33HR	0	0	0	6	6	1716		
	40X-Y33L	2	4	4	0	0	1716	A016	P8
	40X-Y33HL	0	0	0	6	6	1716		
	40X-Y34B	2	4	4	6	6	713		P8
	40X-Y33-A	2	0	2	0	0	1716	A017	P8
	40X-Y33H-A	0	0	0	0	2	1716		
	40X-Y35	3	4	5	0	0	1000	A018	P9
	40X-Y35-1960	0	0	0	6	7	1960		
	40A-Y01	16	19	20	23	24	1235		P11
	40X-Y06	10	12	14	16	18	1756		P15
	40X-Y07	2	4	4	6	6	712		P15

Part	NO.	QTY.					Length (MM)	Code	Page
		3051	3052	3053	3058	3059			
	40X-Y80E-A	2	4	4	6	6	801		P25
	40X-Y81E	4	8	8	12	12	882		P25
	40X-Y82E	2	4	4	6	6	801		P25

Part	NO.	QTY.	Length(MM)	Page
	40A-Y20	4	1236	P3
	40X-Y60	1	3023	P4
	40A-Y61	1	3023	P4
	40X-Y31R	2	418	P6
	40X-Y31L	2	418	P6
	40X-Y32	2	859	P6
	40X-Y21	2	1755	P7
	40X-Y22	2	1755	P7
	40A-Y02	2	1235	P11
	40X-Y03	2	859	P13~14
	40X-Y04R	2	418	P13~14
	40X-Y04L	2	418	P13~14
	40X-Y05R	2	1715	P13~14
	40X-Y05L	2	1715	P13~14
	40A-Y90	2	1866	P18
	40A-Y91R	1	1866	P18
	40A-Y91L	1	1866	P18
	40A-Y92R	1	769	P18
	40A-Y92L	1	769	P18
	40A-Y93	2	769	P18
	40A-Y95	4	1765	P19
	40A-Y96	4	668	P19
	40A-Y97R	1	1860	P21
	40A-Y97-A	2	1851	P21
	40A-Y97L	1	1860	P21
	40A-Y94	1	1835	P21
	40A-Y98-R	1	1910	P22
	40A-Y98-L	1	1910	P22
	40A-Y99	1	1424	P22
	40A-Y100	1	1424	P22

Part	NO.	QTY.	Length(MM)	Page
	40A-Y64	1	3016	P23
	40A-Y17N	1	3110	P23
	40A-Y98A-R	1	1855	P23
	40A-Y98A-L	1	1855	P23

Part	NO.	QTY.					Length (MM)	Code	Page
		3051	3052	3053	3058	3059			
	W06	12	20	20	28	28	46		P2~25
	J09	24	40	40	56	56	PCS		P2~25
	Si6-16	122	142	162	182	202	PCS		P3~22
	J05	135	155	175	195	215	PCS		P3~22
	L17	4	4	4	0	0	2240	A019	P7
	L24	0	0	0	4	4	2789		
	S6-10	20	24	24	28	28	PCS		P7
	Mi6	20	24	24	28	28	PCS		P7
	Si5-16	8	16	16	24	24	PCS		P8
	J01	8	16	16	24	24	PCS		P8
	W04	24	32	32	40	40	PCS		P18~26
	T07	4	8	8	12	12	PCS		P27
	7C26-007N	21.5M	23M	24.5M	26M	27.5M			P12~16
	7C26-009A	5M	5M	6.5M	6.5M	8M			P16
	MCJT002	18M	25M	25M	32M	32M			P20~26

Part	NO.	QTY.	Length(MM)	Page
	7B26-025	8	PCS	P2
	PS8-80	16	PCS	P2
	7B26-017	4	PCS	P3
	M6-8	24	PCS	P3~7
	J08	1	PCS	P3
	7B26-029	4	PCS	P4
	M6-20	8	PCS	P4
	7B26-033	4	PCS	P7
	7B26-005	4	PCS	P7
	Si6-12	4	PCS	P7
	W03	8	30	P18
	Z4.2-13	36	PCS	P21~30
	T04	2	PCS	P21
	Z4.2-38	3	PCS	P21
	Z3.5-25	8	PCS	P21~25
	M6-35	2	PCS	P22
	Si6-35	6	PCS	P22
	PS6-60	2	PCS	P22
	7C28-004	5	PCS	P23
	Z4.2-50	5	PCS	P23
	Si6-25	3	PCS	P23
	7C26-031	2	PCS	P23
	T01N	1	PCS	P25
	T01A	1	PCS	P25
	J02	2	PCS	P25
	7B26-039	2	PCS	P25
	7B26-038	2	PCS	P25
	M4-40	2	PCS	P25
	Mi4-17	2	PCS	P25
	7C33-S02	2	PCS	P28

Part	NO.	QTY.	Length(MM)	Page
	7C33-S03	4	PCS	P29
	Z4.8-25	4	PCS	P29
	7C33-S04	2	PCS	P29
	J07-A	2	PCS	P29
	J07-B	2	PCS	P29
	7B26-009C	2	PCS	P30
	T10	4	PCS	P30
	T10A	4	PCS	P30
	Za4.2-13	6	PCS	P30
	L06	8	1400	P4
	L17	4	2240	P7
	NSST120	1.9M		P21
	7C26-S01A	2	1900	P29
	TOOL-001	1	274	P2~30
	TOOL-002	1	80	P2~30
	TOOL-003A	1	2MM	P5~27
	TOOL-004A	1	3MM	
	TOOL-005	1	4MM	P3~23
	TOOL-006	1	5MM	P3~26

3040P-D

Part	NO.	QTY.	Length(MM)	Page
	40A-Y90	2	1866	P18
	40A-Y91R	1	1866	P18
	40A-Y91L	1	1866	P18
	40A-Y92R	1	769	P18
	40A-Y92L	1	769	P18
	40A-Y93	2	769	P18
	40A-Y95	4	1765	P19
	40A-Y96	4	668	P19
	40A-Y97-A	2	1851	P21
	40A-Y97R	1	1860	P21
	40A-Y97L	1	1860	P21
	40A-Y94	1	1835	P21
	40A-Y98-R	1	1910	P22
	40A-Y98-L	1	1910	P22
	40A-Y99	1	1424	P22
	40A-Y100	1	1424	P22
	40A-Y64	1	3016	P23
	40A-Y17N	1	3110	P23
	40A-Y98A-R	1	1855	P23
	40A-Y98A-L	1	1855	P23
	NSST120	1.9M		P21
	MCJT002	11M		P20

Part	NO.	QTY.	Length(MM)	Page
	7B26-036	1	PCS	P5
	Ma6-12	2	PCS	P5
	M6	2	PCS	P5
	M6-8	2	PCS	P5
	W03	8	30	P18
	W04	16	PCS	P18
	Z4.2-13	16	PCS	P21~25
	T04	2	PCS	P21
	Z4.2-38	3	PCS	P21
	Z3.5-25	8	PCS	P21~25
	M6-35	2	PCS	P22
	Si6-35	6	PCS	P22
	J05	19	PCS	P22~23
	Si6-16	10	PCS	P22
	PS6-60	2	PCS	P22
	7C28-004	5	PCS	P23
	Z4.2-50	5	PCS	P23
	Si6-25	3	PCS	P23
	7C26-031	2	PCS	P23
	T01N	1	PCS	P25
	T01A	1	PCS	P25
	J02	2	PCS	P25
	7B26-039	2	PCS	P25
	7B26-038	2	PCS	P25
	M4-40	2	PCS	P25
	Mi4-17	2	PCS	P25

	Part	NO.	QTY.	Length(MM)	Page	Code
3043P-S-BASE4		40A-Y11-4	1	3173	P2	A001
		40A-Y11-4A	1	2962	P2	A002
		40X-Y14	1	3149	P11	A006
		40X-Y62-4A	1	3132	P17	A007

	Part	NO.	QTY.	Length(MM)	Page	Code
3043P-S-BASE5		40A-Y11-5	1	3924	P2	A001
		40A-Y11-5A	1	3714	P2	A002
		40X-Y15-5	1	3900	P11	A006
		40X-Y62-5A	1	3883	P17	A007

	Part	NO.	QTY.	Length(MM)	Page	Code
3043P-S-BASE6		40A-Y11-6	1	4675	P2	A001
		40A-Y11-6A	1	4465	P2	A002
		40X-Y15-6	1	4651	P11	A006
		40X-Y62-6A	1	4634	P17	A007

	Part	NO.	QTY.	Length(MM)	Page	Code
3043P-S-BASE7		40A-Y11-7	1	5426	P2	A001
		40A-Y11-7A	1	5216	P2	A002
		40X-Y15-7	1	5402	P11	A006
		40X-Y62-7A	1	5385	P17	A007

	Part	NO.	QTY.	Length(MM)	Page	Code
3043P-S-BASE8		40A-Y11-8	1	6177	P2	A001
		40A-Y11-8A	1	5967	P2	A002
		40X-Y15-8	1	6153	P11	A006
		40X-Y62-8A	1	6136	P17	A007

	Part	NO.	QTY.	Length(MM)	Page	Code
3043PA-S-4		40A-Y13L	1	854	P2	A008
		40A-Y13R	1	854	P2	A009
		40A-S11-4AR	1	749	P2	A010
		40A-S11-4AL	1	749	P2	A011
		40A-Y13L-A	1	779	P2	
		40A-Y13R-A	1	779	P2	
		40A-Y15-L	1	842	P11	A012
		40A-Y15-R	1	842	P11	A013

	Part	NO.	QTY.	Length(MM)	Page	Code
3043PA-S-5		50A-Y13L	1	1230	P2	A008
		50A-Y13R	1	1230	P2	A009
		40A-S11-5AR	1	1125	P2	A010
		40A-S11-5AL	1	1125	P2	A011
		50A-Y13L-A	1	1155	P2	
		50A-Y13R-A	1	1155	P2	
		50A-Y15-L	1	1218	P11	A012
		50A-Y15-R	1	1218	P11	A013
		40X-Y62-5B	2	430	P17	A014
		50X-Y61N1	2	376	P17	

	Part	NO.	QTY.	Length(MM)	Page	Code
3043PA-S-6		40A-S11-6R	1	1605	P2	A008
		40A-S11-6L	1	1605	P2	A009
		40A-S11-6AR	1	1500	P2	A010
		40A-S11-6AL	1	1500	P2	A011
		40A-S15-6R	1	1593	P11	A012
		40A-S15-6L	1	1593	P11	A013
		40X-Y62-5B	2	430	P17	
		40X-Y62-6B	2	806	P17	A014

	Part	NO.	QTY.	Length(MM)	Page	Code
3043PA-S-7		40A-S11-7R	1	1981	P2	A008
		40A-S11-7L	1	1981	P2	A009
		40A-S11-7AR	1	1876	P2	A010
		40A-S11-7AL	1	1876	P2	A011
		40A-S15-7R	1	1969	P11	A012
		40A-S15-7L	1	1969	P11	A013
		40X-Y62-6B	2	806	P17	
		40X-Y62-7B	2	1181	P17	A014

	Part	NO.	QTY.	Length(MM)	Page	Code
3043PA-S-8		40A-S11-8R	1	2356	P2	A008
		40A-S11-8L	1	2356	P2	A009
		40A-S11-8AR	1	2251	P2	A010
		40A-S11-8AL	1	2251	P2	A011
		40A-S15-8R	1	2344	P11	A012
		40A-S15-8L	1	2344	P11	A013
		40X-Y62-7B	2	1181	P17	
		40X-Y62-8B	2	1557	P17	A014

	Part	NO.	QTY.	Length(MM)	Page
3043PA-S-4G		40A-Y12	1	3173	P2
		40A-Y12-A	1	3023	P2
		40X-Y14	1	3149	P11
		40X-Y60-AN	1	3023	P17

3140P-S

Part	NO.	QTY.	Length(MM)	Page
	40A-Y30	14	1235	P7
	50X-Y31R	2	633	P7
	50X-Y31L	2	633	P7
	40X-Y31A-R	2	201	P7
	40X-Y31A-L	2	201	P7
	40X-Y34C	2	713	P9
	40X-Y33-B	6	1716	P9
	40X-Y33-C	2	839	P9
	40A-Y01	14	1235	P11
	50X-Y04R	2	633	P13~14
	50X-Y04L	2	633	P13~14
	40X-Y04A-R	2	201	P13~14
	40X-Y04A-L	2	201	P13~14
	40X-Y06	6	1756	P15
	40X-Y06A	2	878	P15
	40X-Y82E-A	2	801	P26

Part	NO.	QTY.	Length(MM)	Page
	7B26-011	50	PCS	P2~8
	Ma6-12	50	PCS	P2~8
	M6	50	PCS	P2~8
	Si6-16	100	PCS	P4~22
	J05	100	PCS	P4~22
	S6-10	32	PCS	P8
	7B26-005	8	PCS	P8
	Mi6	32	PCS	P8
	Si5-16	4	PCS	P9
	J01	4	PCS	P9
	TOOL-009	1	341	P2~8

3140P-S-2

Part	NO.	QTY.	Length(MM)	Page
	40A-Y30	4	1235	P7
	40X-Y34C	2	713	P9
	40X-Y33-C	2	839	P9
	40X-Y33-B	2	1716	P9
	40A-Y01	4	1235	P11
	40X-Y06	2	1756	P15
	40X-Y06A	2	878	P15
	40X-Y82E-A	2	801	P26

Part	NO.	QTY.	Length(MM)	Page
	7B26-011	14	PCS	P2~8
	Ma6-12	14	PCS	P2~8
	M6	14	PCS	P2~8
	Si6-16	28	PCS	P4~22
	J05	28	PCS	P4~22
	Si5-16	4	PCS	P9
	J01	4	PCS	P9

CTN NO.	QTY.				
	3051	3052	3053	3058	3059
3040P-D	1	1	1	1	1
3043P-S-BASE4	1	0	0	0	0
3043P-S-BASE5	0	1	0	0	0
3043P-S-BASE6	0	0	1	0	0
3043P-S-BASE7	0	0	0	1	0
3043P-S-BASE8	0	0	0	0	1
3043PA-S-4	2	1	1	1	1
3043PA-S-5	0	1	0	0	0
3043PA-S-6	0	0	1	0	0
3043PA-S-7	0	0	0	1	0
3043PA-S-8	0	0	0	0	1
3043PA-S-4G	1	1	1	1	1
3140P-S	1	1	1	1	1
3140P-S-2	0	1	1	2	2

Part	NO.	QTY.					Length(MM)	Page
		3051	3052	3053	3058	3059		
	354×1262	24	28	32	36	40	1262	P10
	324×203	4	4	4	4	4	324	P13-14
	354×420	4	4	4	4	4	420	P13-14
	354×635	4	4	4	4	4	635	P13-14
	354×852	4	4	4	4	4	852	P13-14
	354×1764	12	12	16	16	20	1764	P15
	354×887	4	8	8	12	12	887	P15
	659×1756	4	4	4	4	4	1756	P19
	782×863	2	4	4	6	6	863	P26

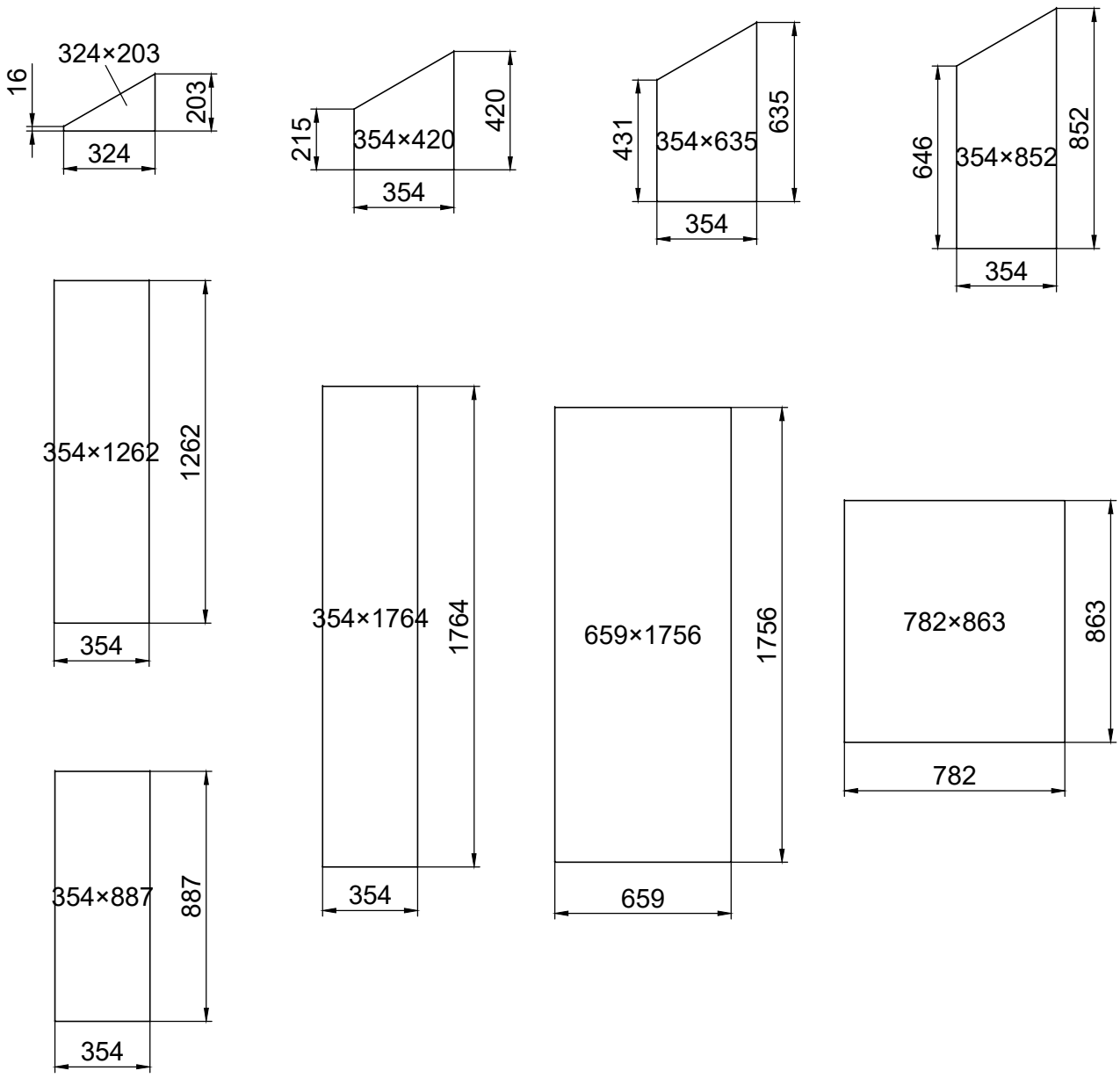

NO.	3051	3052	3053	3058	3059
L1	3139	3890	4641	5392	6143
L2	833	1208	1583	1959	2334
AREA	9.9 M^2	12.2 M^2	14.6 M^2	16.9 M^2	19.3 M^2

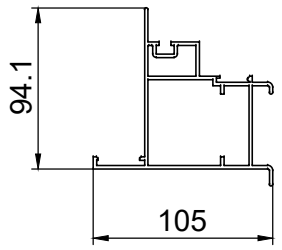

Sealing should be done to prevent frost from destroying the wall. The sealant between the wall and foundation of the greenroom is provided and handled by customers themselves.

Tätning bör göras för att muren ej skall frostsprängas. Tätning mellan mur och sockel står kunden själv för.

Tætningen bør gøres for at forhindre frostsprængninger i muren. Tætningen mellem mur og aluminiumprofil står kunden selv for

En tetning bør lages for å hindre frostsprengning av muren. Tetning mellom mur og sokkel ordnes av kunden selv

Tiivistys täytyy tehdä, jotta muuri ei hajoa pakkasella. Tiiviste muurin ja sokkelin välissä täytyy asiakkaan hoitaa itse

Die Abdichtung sollte erfolgen, um zu verhindern, dass der Frost die Wand zerstört. Die Abdichtung zwischen der Wand und dem Fundament des Greenrooms wird vom Kunden selbst besorgt und durchgeführt.

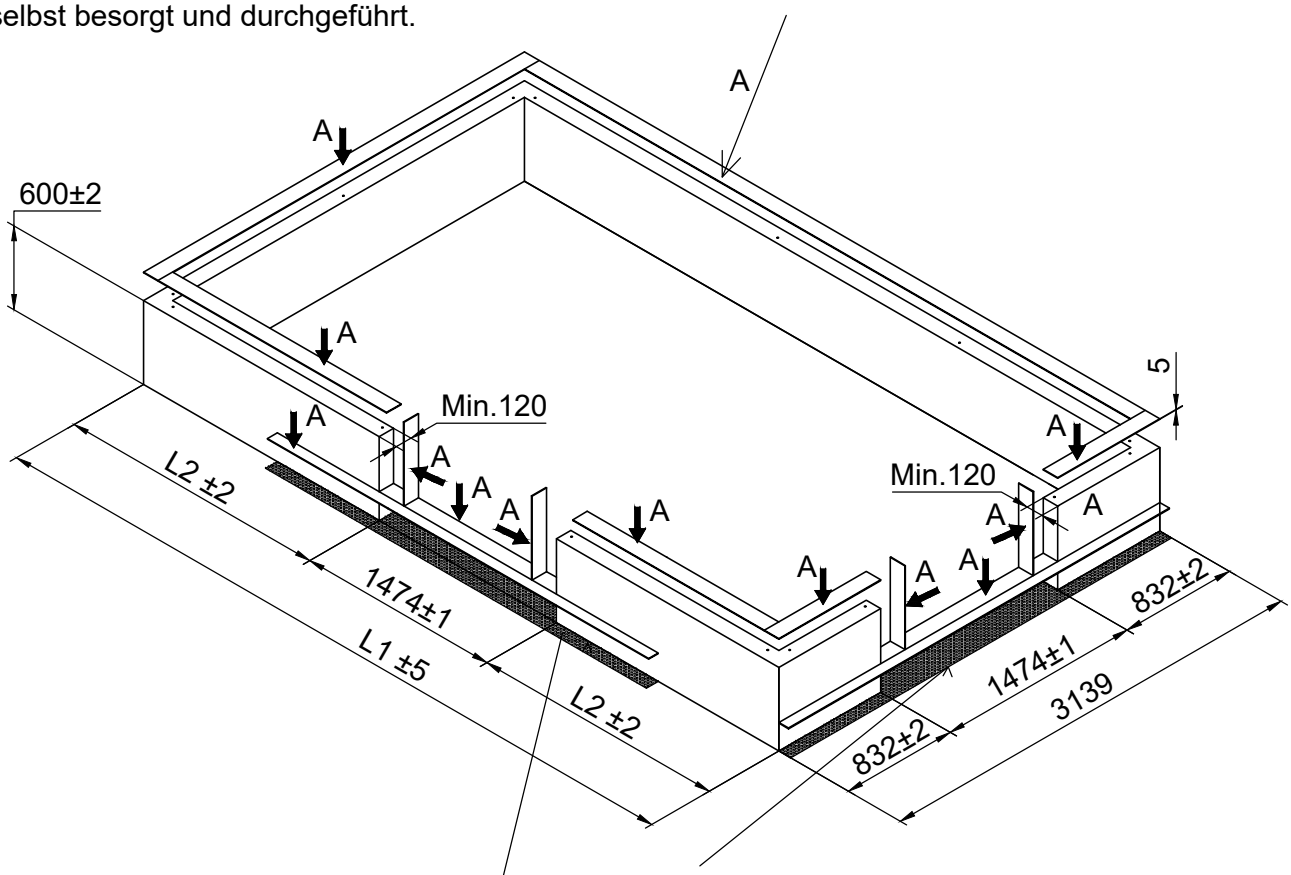

Make sure the floor below the doors frame should be flat and solid.
Se till att underlaget under dörrramen är plan och på solid grund.
Sørg for, at underlaget under dørkarmen er plan og på fast grund.
Sørg for at underlaget under dørterskelen er slett og på solid fundament.
Tarkista, että maa ovikarmin alla on sileä ja tasainen.
Achten Sie darauf, dass der Boden unter dem Türrahmen eben und fest ist.

TOOL-009(341MM)

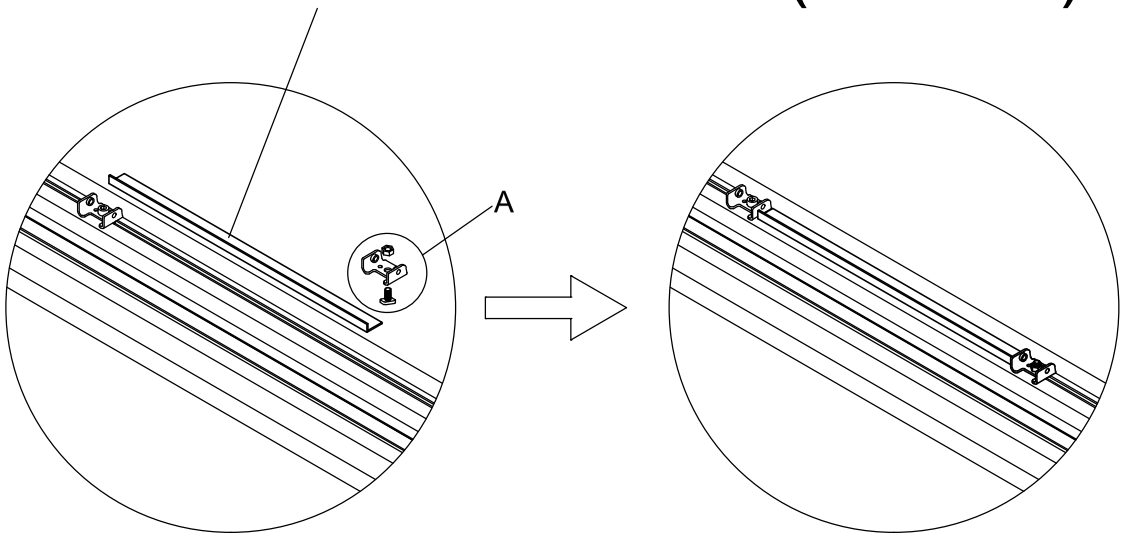

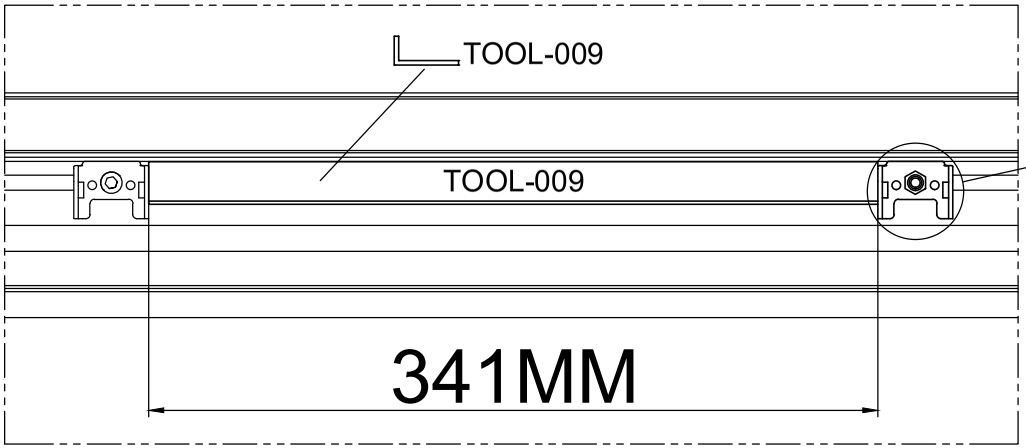

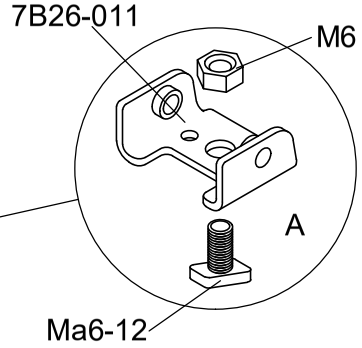

Part	Product	NO.	Length (MM)	QTY.	CTN NO.	Code
	3051	40A-Y11-4	3173	1	3043P-S-BASE4	A001
	3052	40A-Y11-5	3924	1	3043P-S-BASE5	
	3053	40A-Y11-6	4675	1	3043P-S-BASE6	
	3058	40A-Y11-7	5426	1	3043P-S-BASE7	
	3059	40A-Y11-8	6177	1	3043P-S-BASE8	
	3051	40A-Y13R	854	1	3043PA-S-4	A008
	3052	50A-Y13R	1230	1	3043PA-S-5	
	3053	40A-S11-6R	1605	1	3043PA-S-6	
	3058	40A-S11-7R	1980	1	3043PA-S-7	
	3059	40A-S11-8R	2356	1	3043PA-S-8	
	3051	40A-Y13L	854	1	3043PA-S-4	A009
	3052	50A-Y13L	1230	1	3043PA-S-5	
	3053	40A-S11-6L	1605	1	3043PA-S-6	
	3058	40A-S11-7L	1980	1	3043PA-S-7	
	3059	40A-S11-8L	2356	1	3043PA-S-8	

Part	NO.	QTY.										Length (MM)
		3051		3052		3053		3058		3059		
		3140P-S	3140P-S-2	3140P-S	3140P-S-2	3140P-S	3140P-S-2	3140P-S	3140P-S-2	3140P-S	3140P-S-2	
	7B26-011	6	0	7	0	8	2	8	3	8	6	PCS
	Ma6-12	6	0	7	0	8	2	8	3	8	6	PCS
	M6	6	0	7	0	8	2	8	3	8	6	PCS

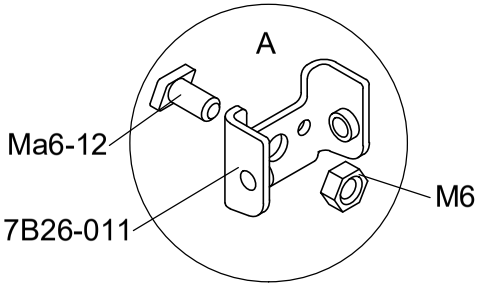

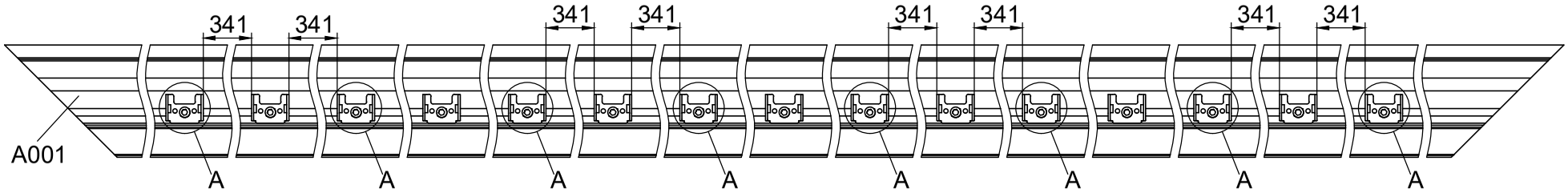

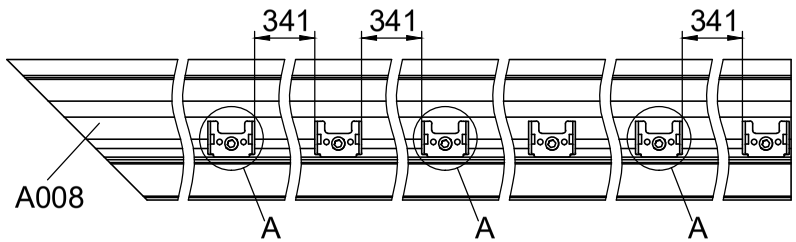

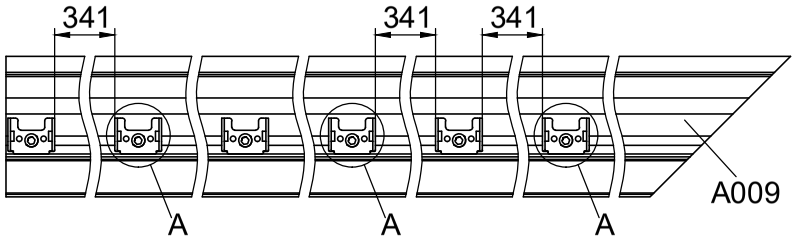

Part	NO.	QTY.	Length(MM)	CTN NO.
	40A-Y12	1	3173	3043PA-S-4G
	40A-Y13R	1	854	3043PA-S-4
	40A-Y13L	1	854	3043PA-S-4

Part	NO.	QTY.	Length(MM)	CTN NO.
	Ma6-12	6	PCS	3140P-S
	7B26-011	6	PCS	3140P-S
	M6	6	PCS	3140P-S

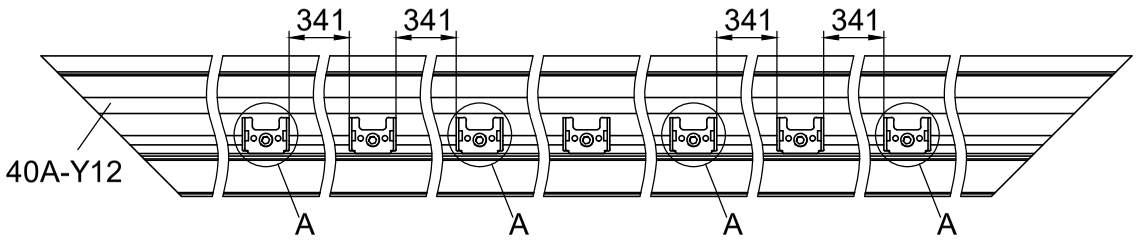

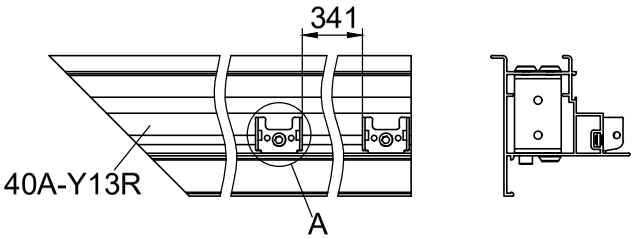

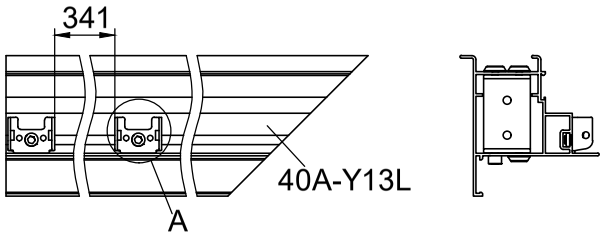

Part	NO.	QTY.	Length(MM)
	7B26-025	8	PCS
	W06	4	46

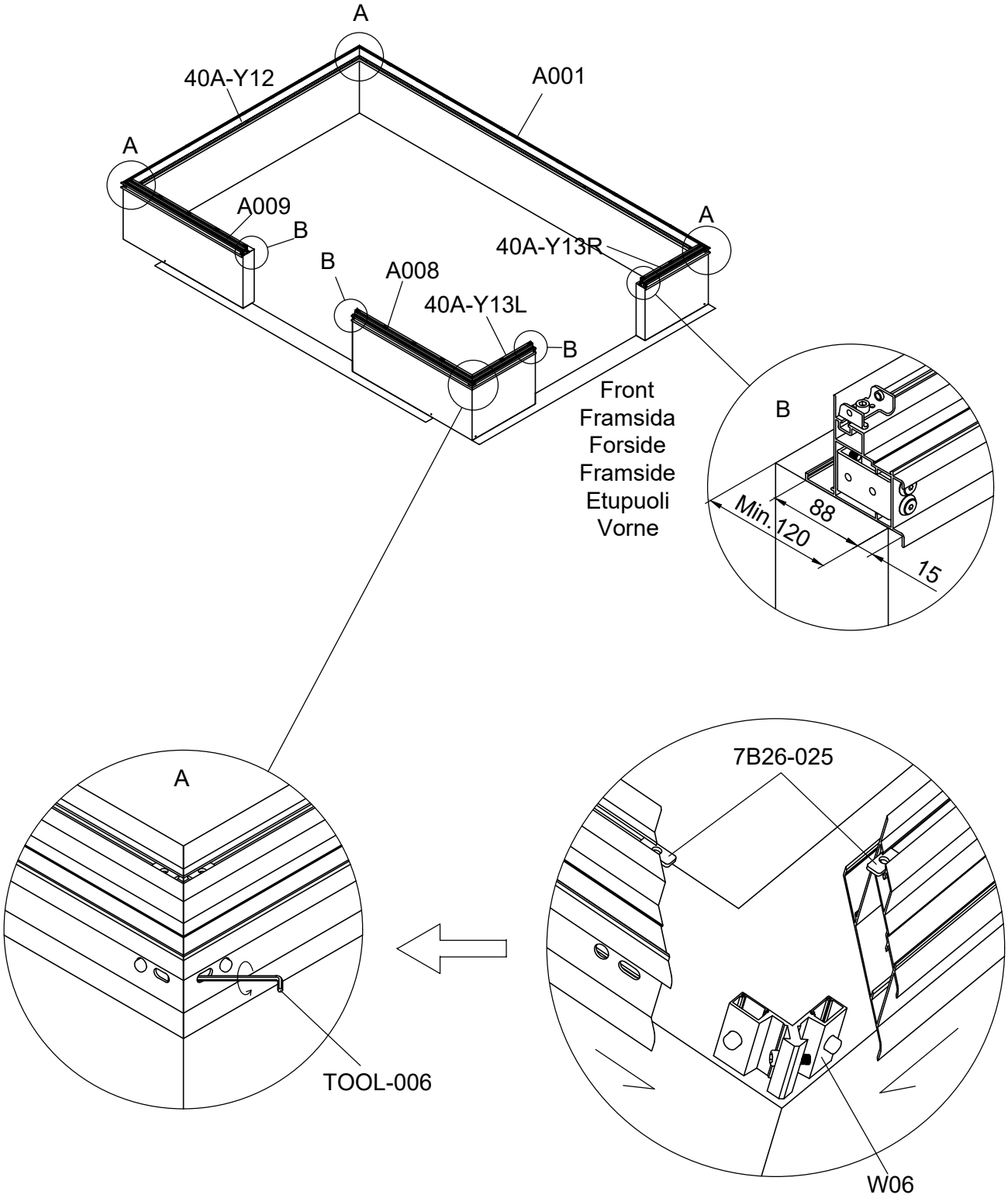

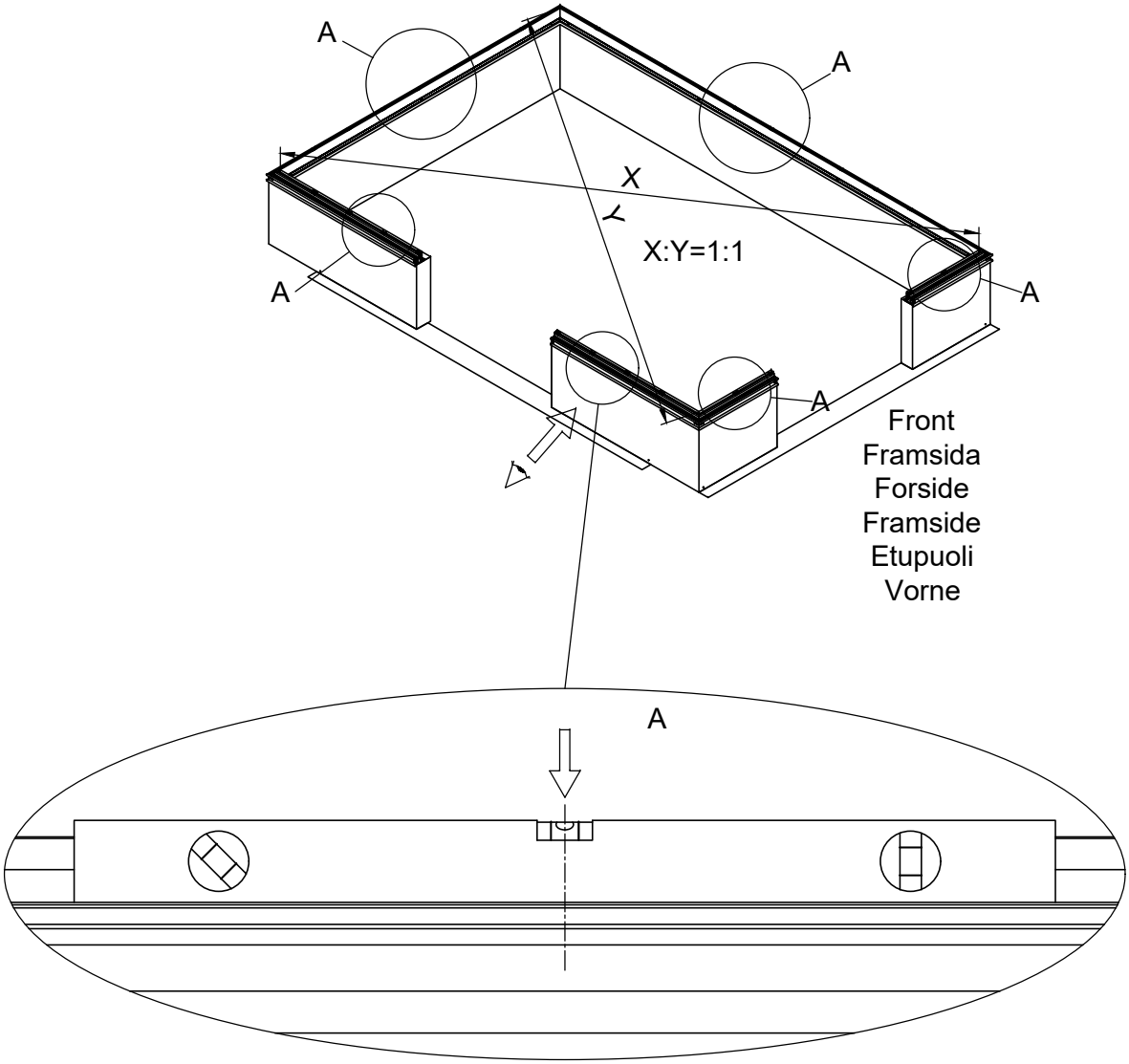
A
A
A
A
A
X
Y
X:Y=1:1
Front
Framsida
Forside
Framside
Etupuoli
Vorne
A

Part	NO.	QTY.	Length(MM)
	PS8-80	15	PCS

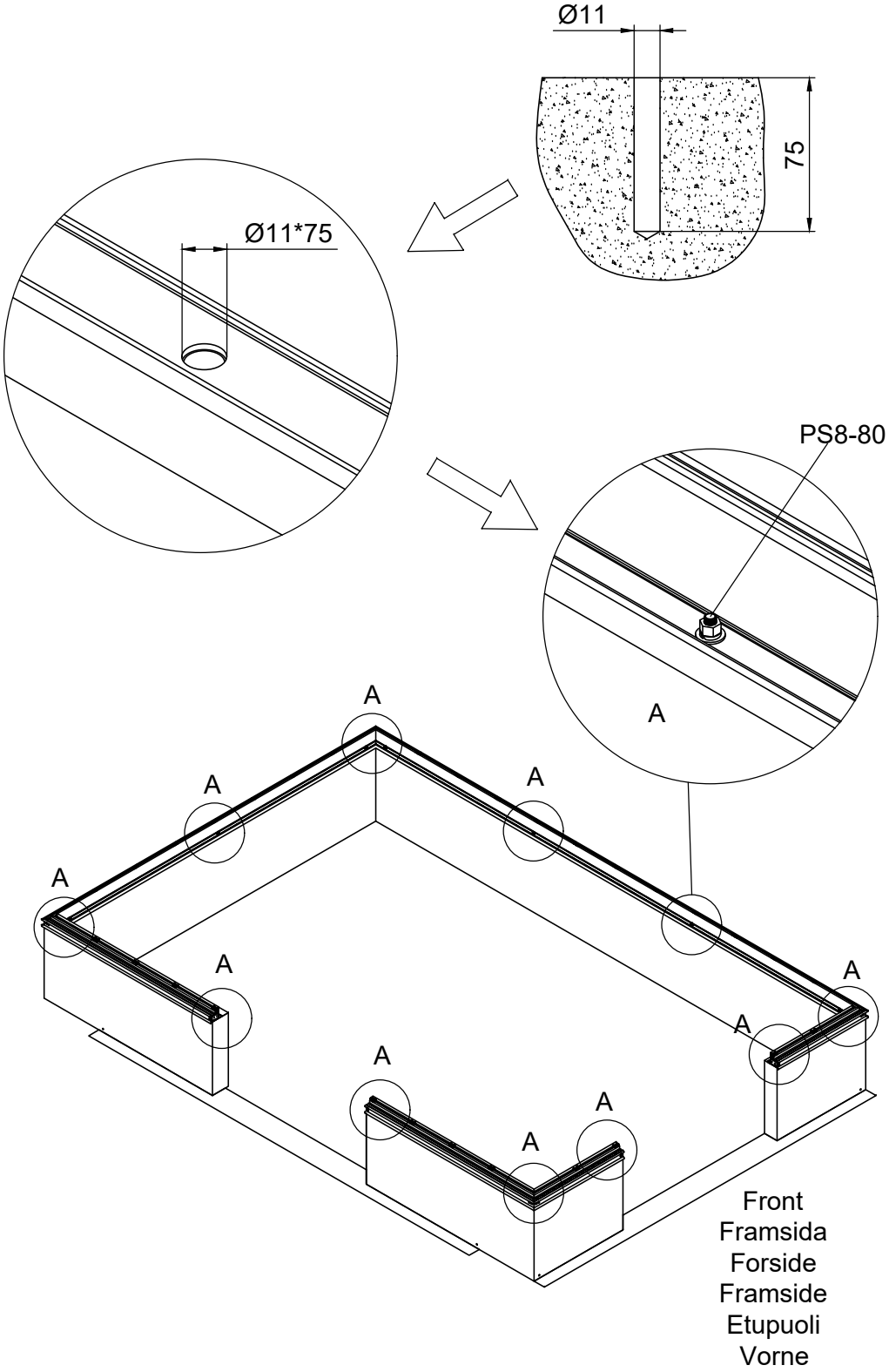

Part	Product	NO.	Length (MM)	QTY.	CTN NO.	Code
	3051	40A-Y11-4A	2963	1	3043P-S-BASE4	A002
	3052	40A-Y11-5A	3714	1	3043P-S-BASE5	
	3053	40A-Y11-6A	4465	1	3043P-S-BASE6	
	3058	40A-Y11-7A	5216	1	3043P-S-BASE7	
	3059	40A-Y11-8A	5967	1	3043P-S-BASE8	
	3051	40A-S11-4AR	749	1	3043PA-S-4	A010
	3052	40A-S11-5AR	1125	1	3043PA-S-5	
	3053	40A-S11-6AR	1500	1	3043PA-S-6	
	3058	40A-S11-7AR	1876	1	3043PA-S-7	
	3059	40A-S11-8AR	2251	1	3043PA-S-8	
	3051	40A-S11-4AL	749	1	3043PA-S-4	A011
	3052	40A-S11-5AL	1125	1	3043PA-S-5	
	3053	40A-S11-6AL	1500	1	3043PA-S-6	
	3058	40A-S11-7AL	1876	1	3043PA-S-7	
	3059	40A-S11-8AL	2251	1	3043PA-S-8	

Part	NO.	Length(MM)	QTY.	CTN NO.
	40A-Y12-A	3023	1	3043PA-S-4G
	40A-Y13R-A	779	1	3043PA-S-4
	40A-Y13L-A	779	1	3043PA-S-4

Part	NO.	QTY.	Length(MM)
	J09	8	PCS

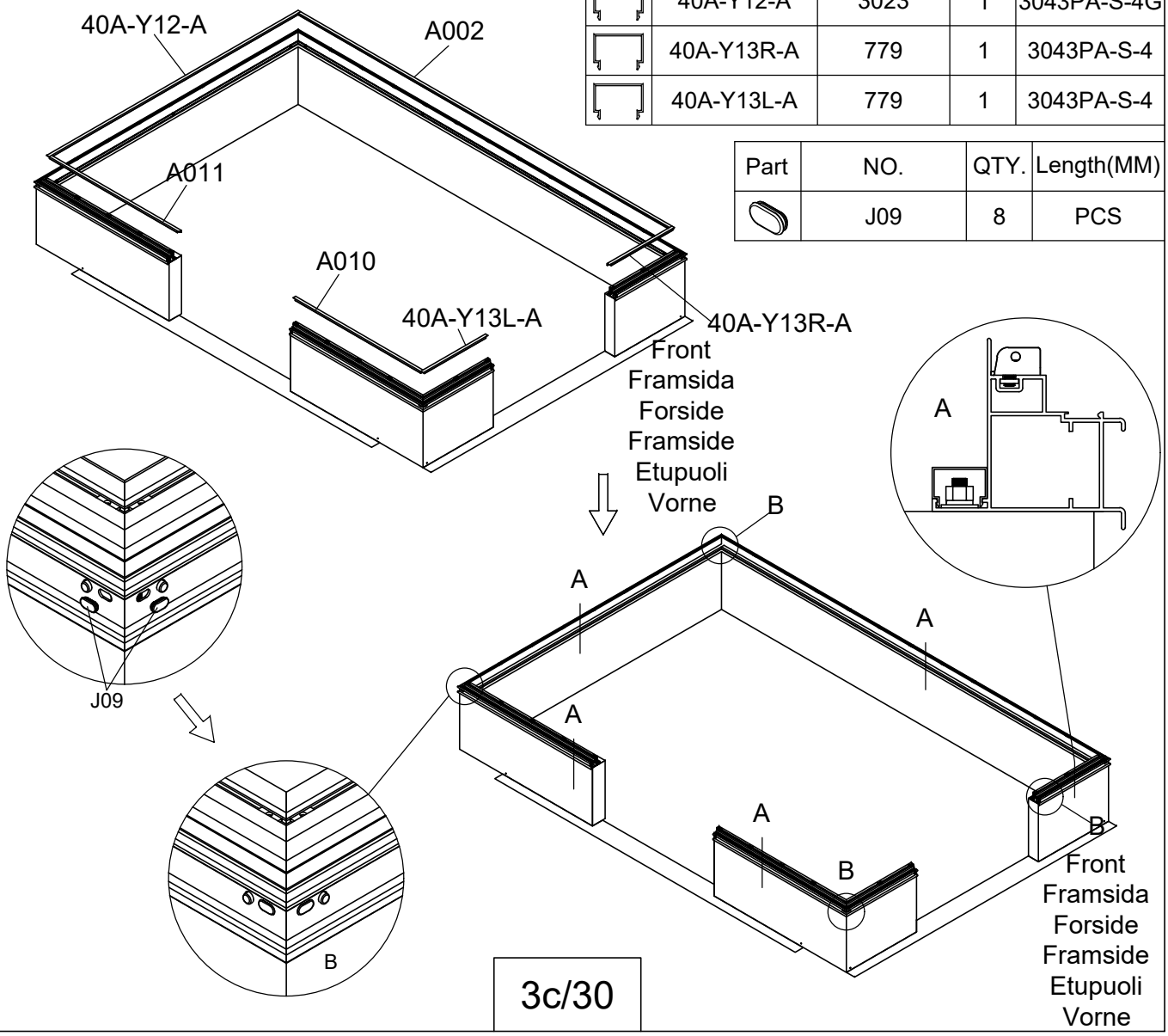

Part	NO.	QTY.	Length(MM)
	7B26-017	4	PCS
	M6-8	8	PCS
	J08	1	PCS

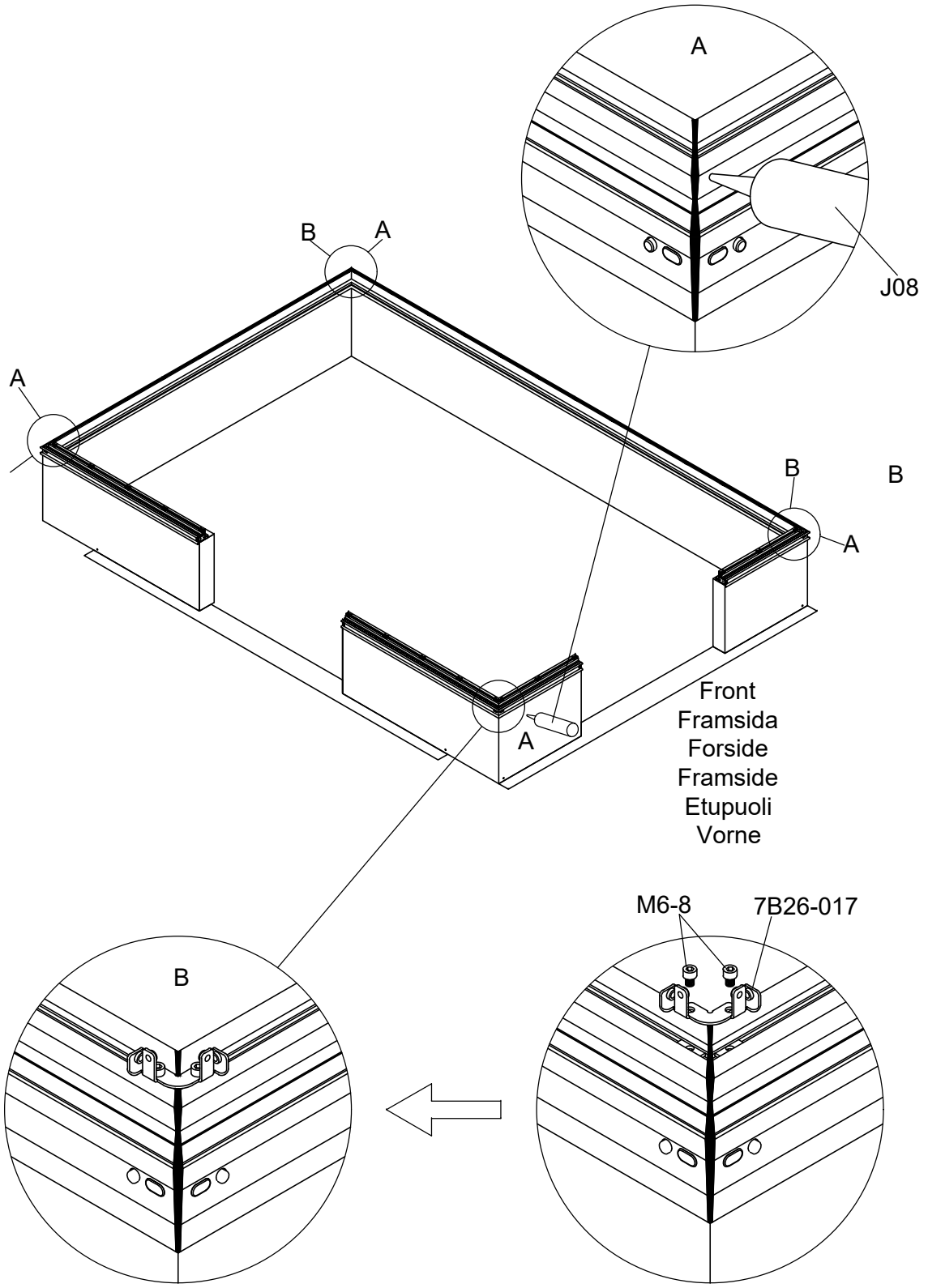

Part	NO.	QTY.	Length(MM)
	40A-Y20	4	1236
	Si6-16	8	PCS
	J05	8	PCS
	M6-8	8	PCS

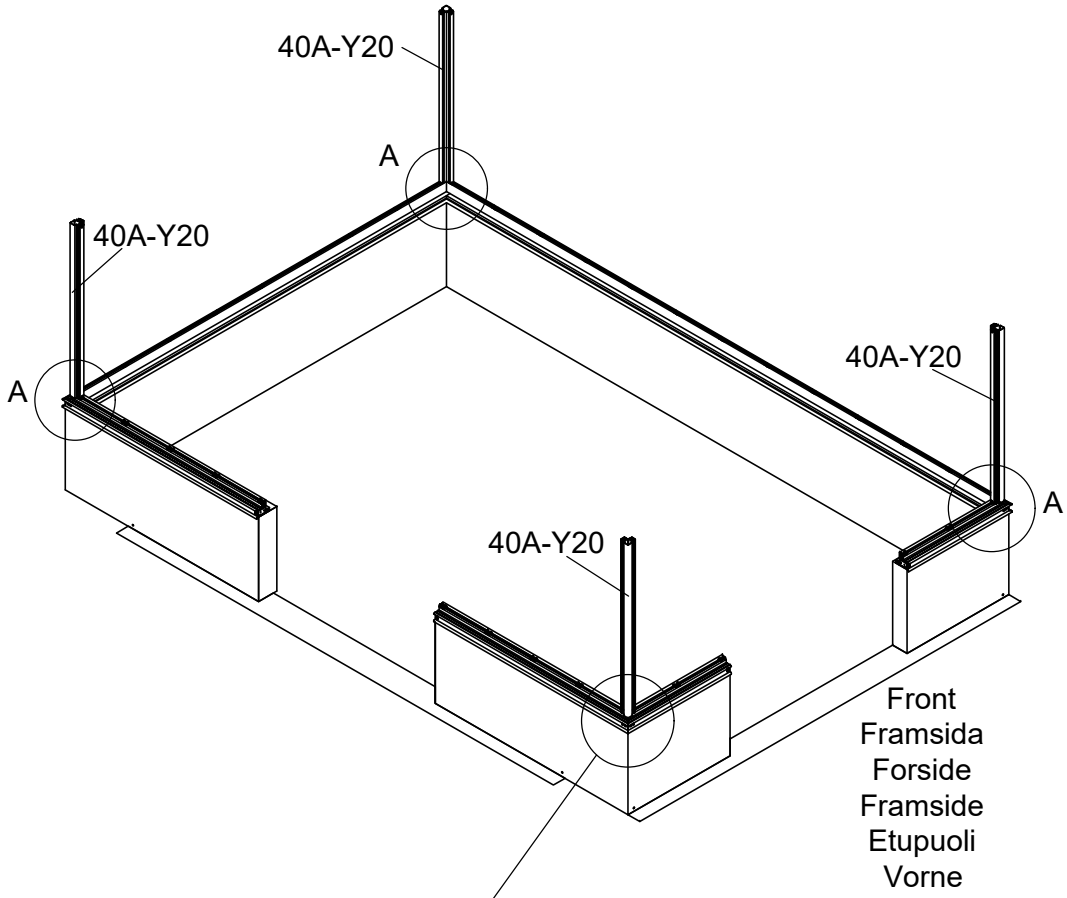

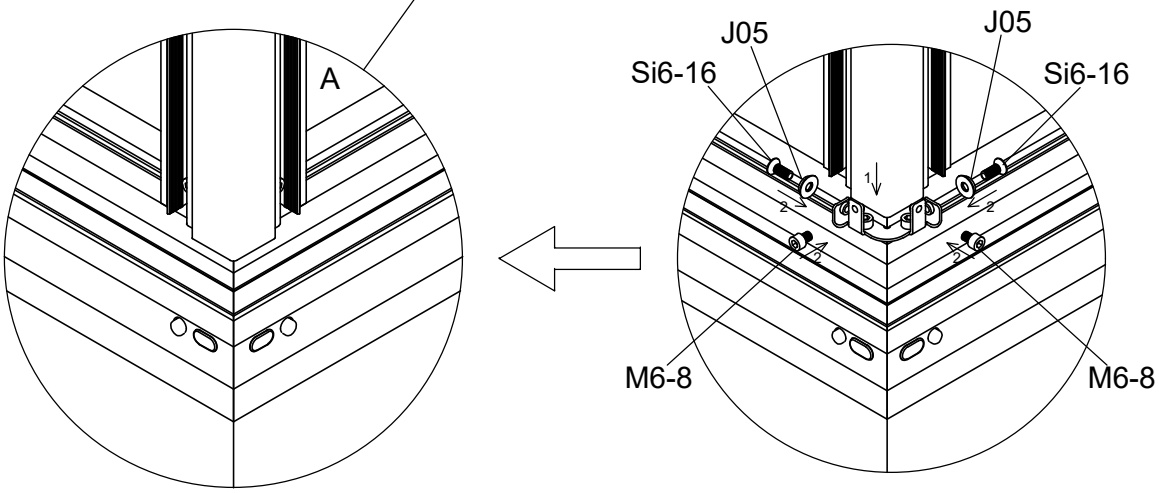

Part	NO.	QTY.	Length(MM)
	40X-Y60	1	3023

Part	NO.	QTY.	Length(MM)	CTN NO.
	Ma6-12	8	PCS	3140P-S
	7B26-011	8	PCS	3140P-S
	M6	8	PCS	3140P-S

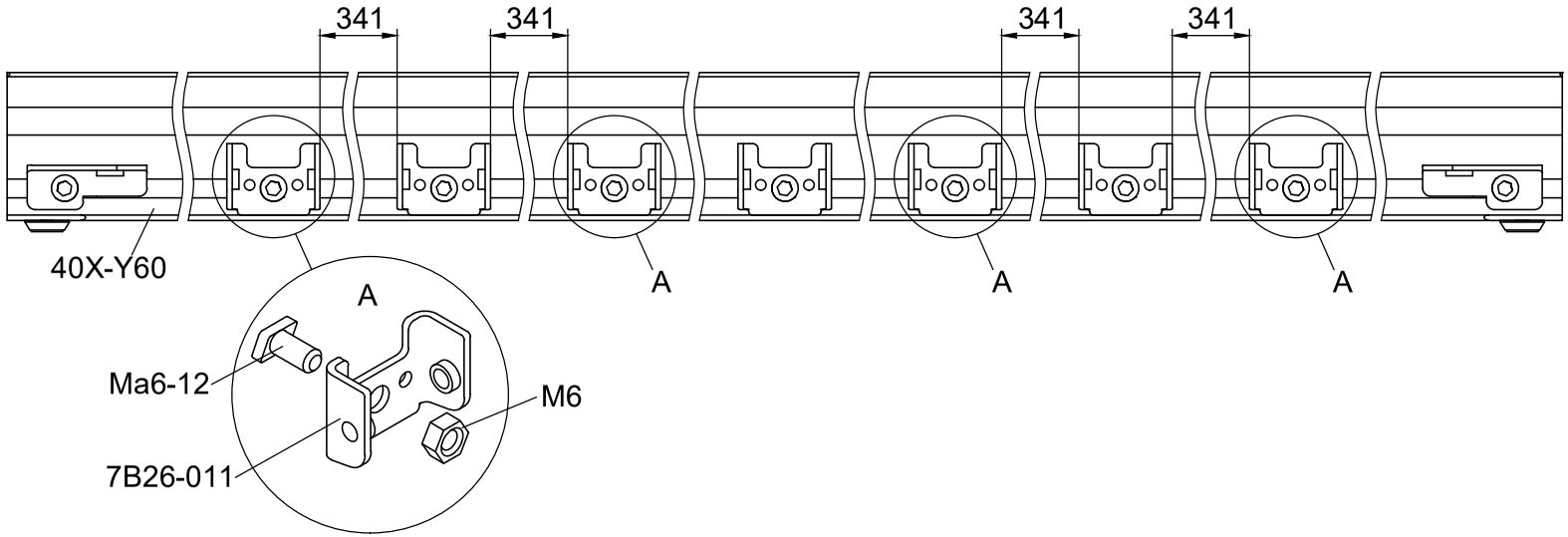

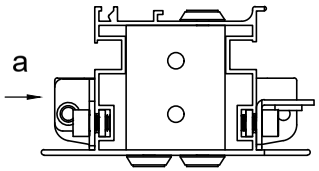

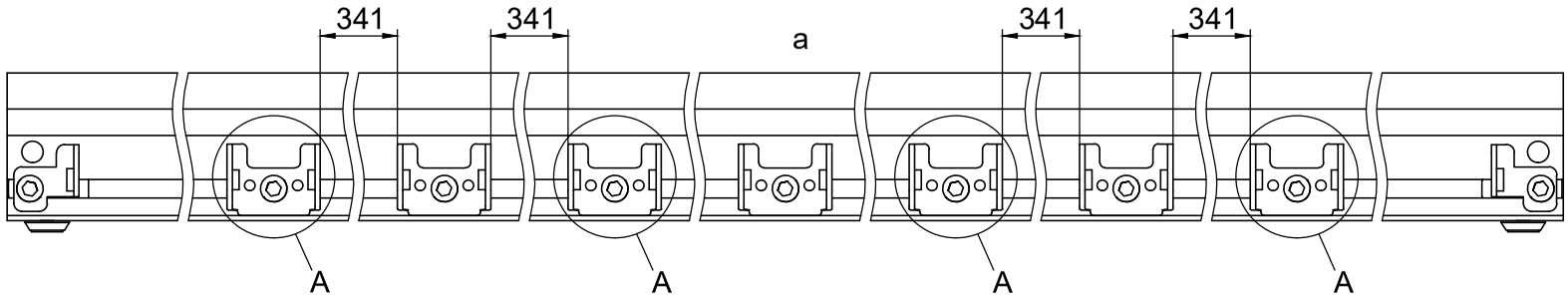

Part	NO.	QTY.	Length(MM)
	40A-Y61	1	3023

Part	NO.	QTY.	Length(MM)	CTN NO.
	Ma6-12	6	PCS	3140P-S
	7B26-011	6	PCS	3140P-S
	M6	6	PCS	3140P-S

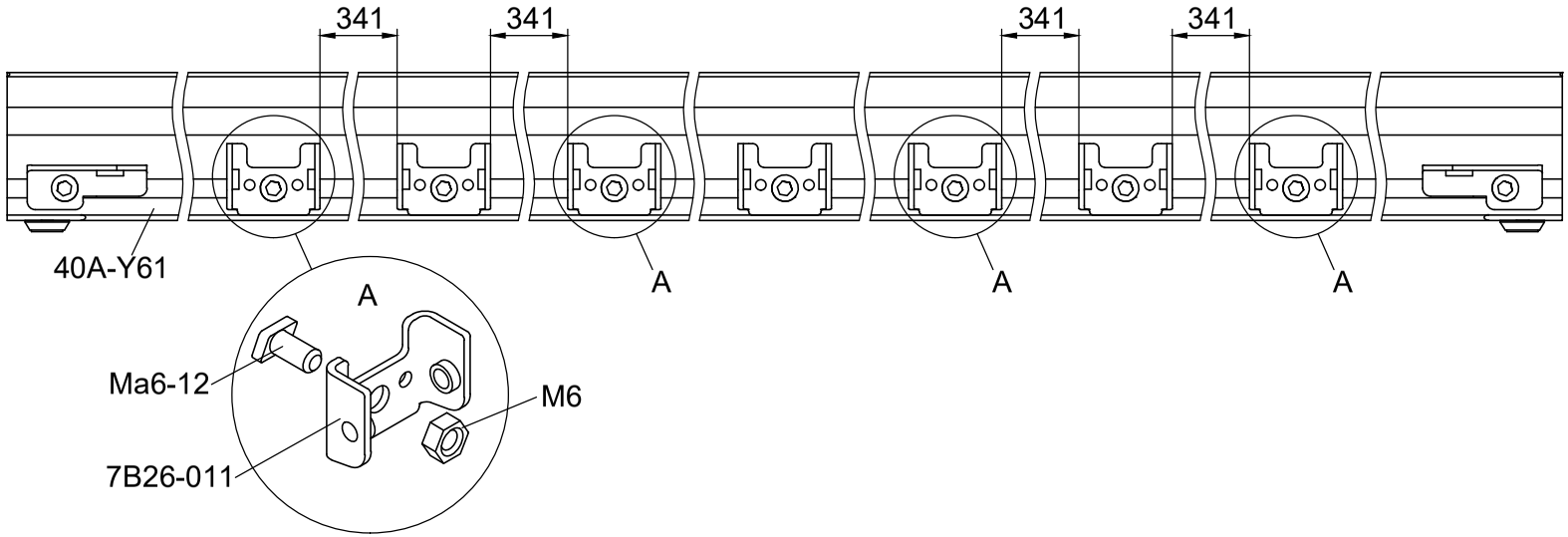

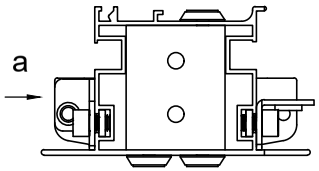

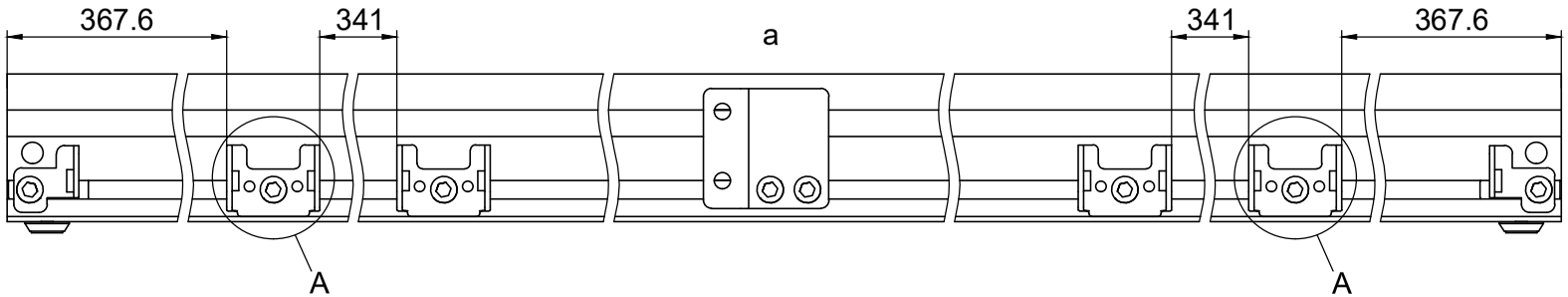

Part	NO.	QTY.	Length(MM)
	Si6-16	4	PCS
	J05	4	PCS
	L06	4	1400

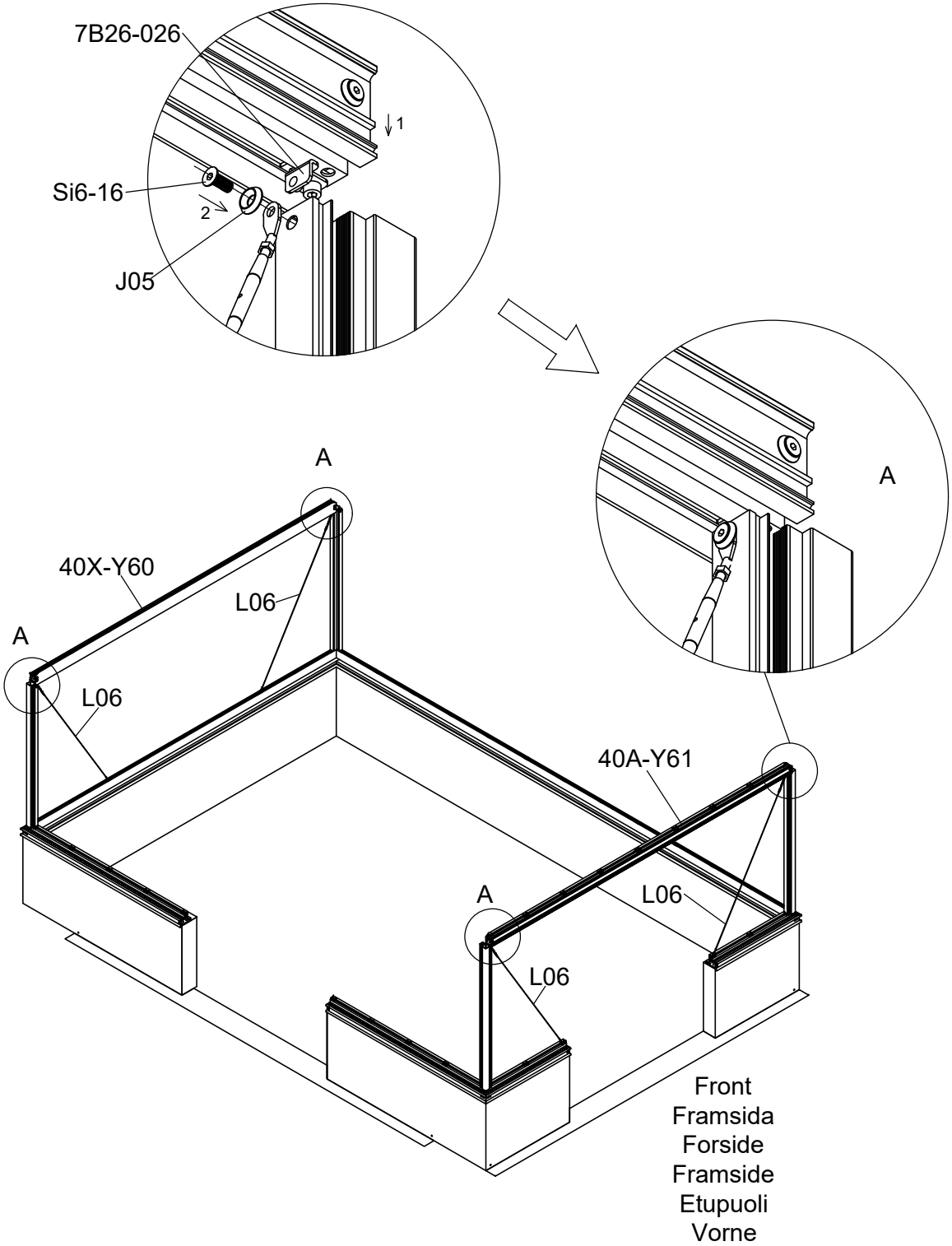

Part	Product	NO.	Length (MM)	QTY.	Code
	3051	40X-Y62-4NR	3173	1	A003
	3052	40X-Y62-5NR	3924		
	3053	40X-Y62-6NR	4675		
	3058	40X-Y62-7NR	5426		
	3059	40X-Y62-8NR	6177		

Part	NO.	QTY.										Length (MM)
		3051		3052		3053		3058		3059		
		3140P -S	3140P -S-2	3140P -S	3140P -S-2	3140P -S	3140P -S-2	3140P -S	3140P -S-2	3140P -S	3140P -S-2	
	7B26-011	8	0	8	2	8	4	8	6	8	8	PCS
	Ma6-12	8	0	8	2	8	4	8	6	8	8	PCS
	M6	8	0	8	2	8	4	8	6	8	8	PCS

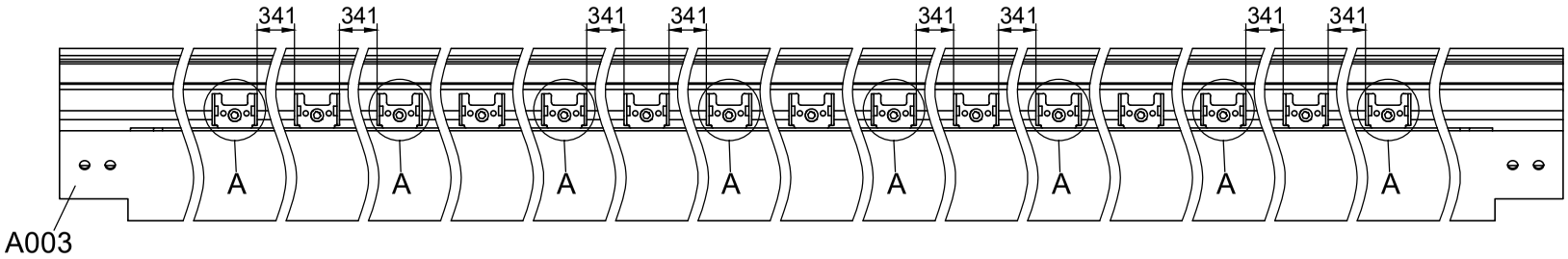

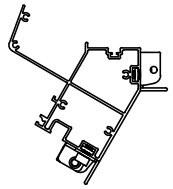

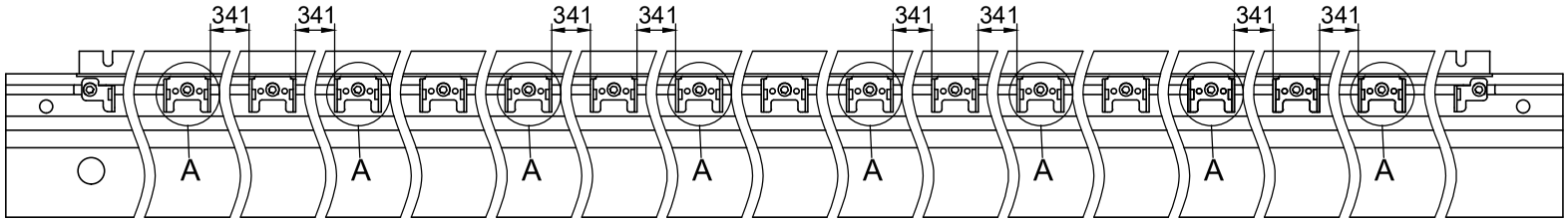

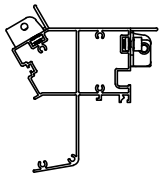

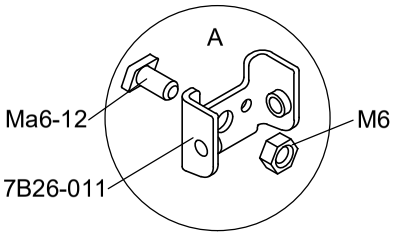

Part	Product	NO.	Length (MM)	QTY.	Code
	3051	40A-Y62-4NL	3173	1	A004
	3053	40A-Y62-6NL	4634		
	3059	40A-Y62-8NL	6136		

Part	NO.	QTY.	Length(MM)	CTN NO.
	7B26-036	1	PCS	3040P-D
	Ma6-12	2	PCS	3040P-D
	M6	2	PCS	3040P-D

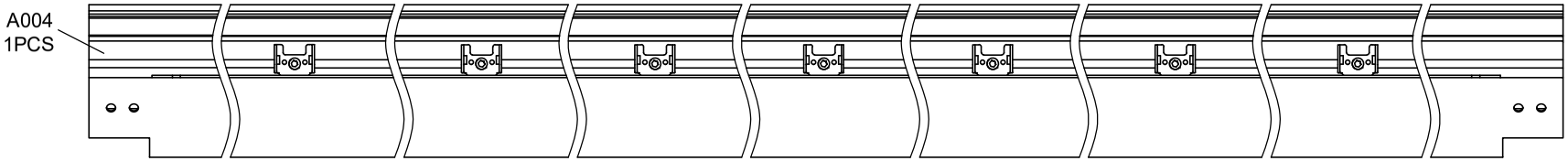

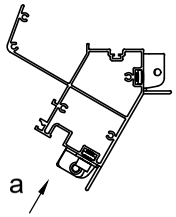

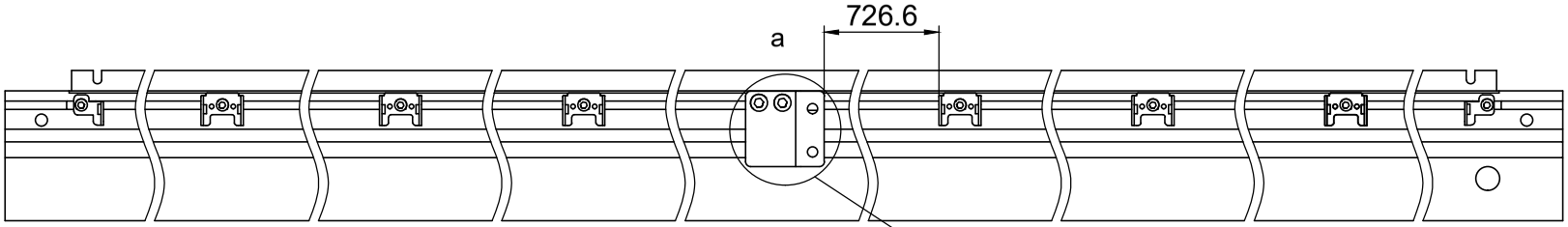

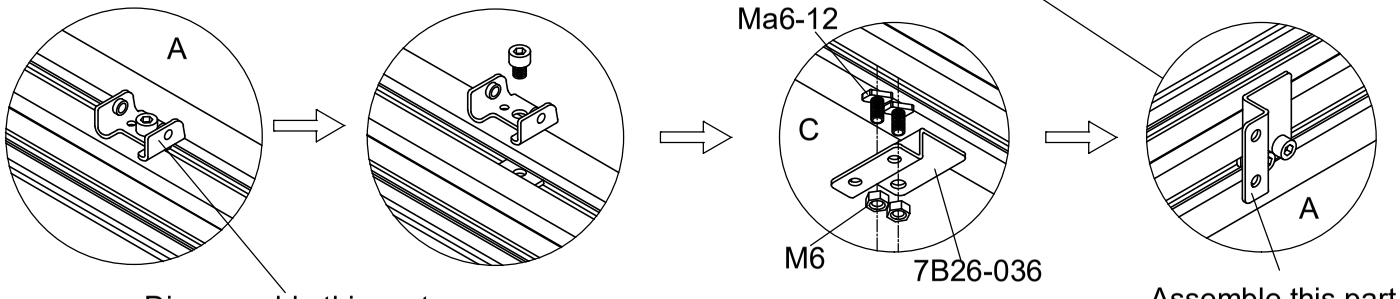

Disassemble this part.
Avmontera fästet från profilen på långsidan.
Afmonter beslaget fra profilen på langsiden.
Demonter festet fra profilen på langsiden.
Irrota profiilin pitkällä sivulla oleva kiinnike.
Demontieren Sie dieses Teil.

Assemble this part to the middle of the profiles.
Montera fästet i mitten av profilen.
Montere beslaget i midten af profilen.
Monter festet i midten av profilen.
Asenna kiinnike profiilin keskelle.
Montieren Sie dieses Teil in der Mitte der Profile.

Part	Product	NO.	Length (MM)	QTY.	Code
	3052	40A-Y62-5NL	3883	1	A004
	3058	40A-Y62-7NL	5385		

Part	NO.	QTY.	Length(MM)	CTN NO.
	7B26-036	1	PCS	3040P-D
	Ma6-12	2	PCS	3040P-D
	M6	2	PCS	3040P-D

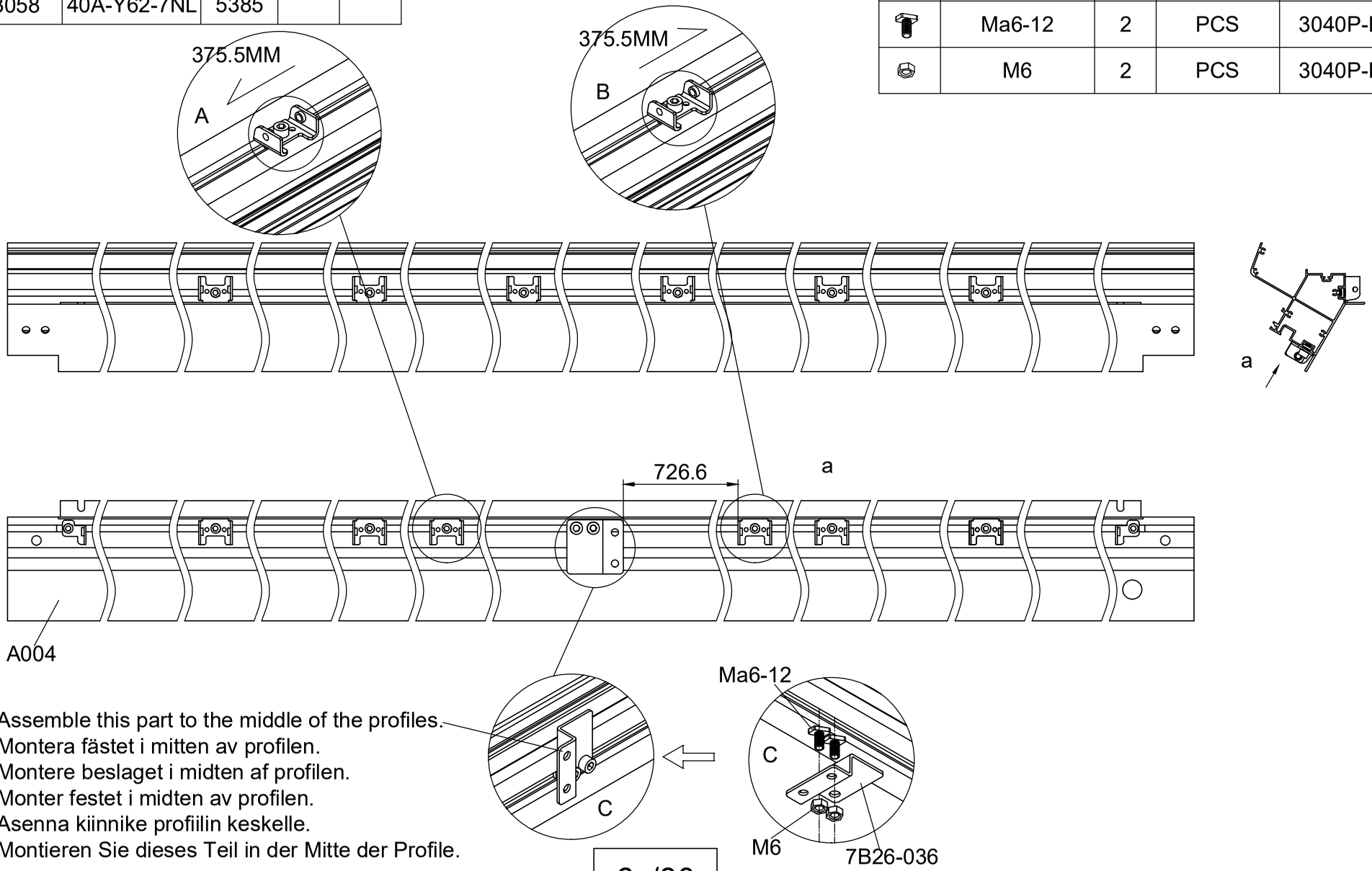

Assemble this part to the middle of the profiles.
Montera fästet i mitten av profilen.
Montere beslaget i midten af profilen.
Monter festet i midten av profilen.
Asenna kiinnike profiilin keskelle.
Montieren Sie dieses Teil in der Mitte der Profile.

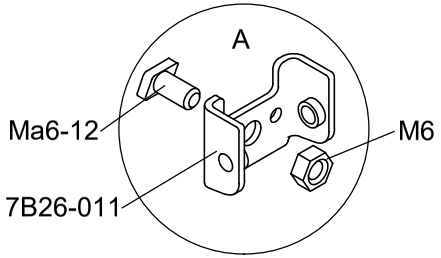

Part	NO.	QTY.										Length (MM)
		3051		3052		3053		3058		3059		
		3140P-S	3140P -S-2	3140P-S	3140P -S-2	3140P-S	3140P -S-2	3140P-S	3140P -S-2	3140P-S	3140P -S-2	
	7B26-011	6	0	7	0	8	2	8	3	8	6	PCS
	Ma6-12	6	0	7	0	8	2	8	3	8	6	PCS
	M6	6	0	7	0	8	2	8	3	8	6	PCS

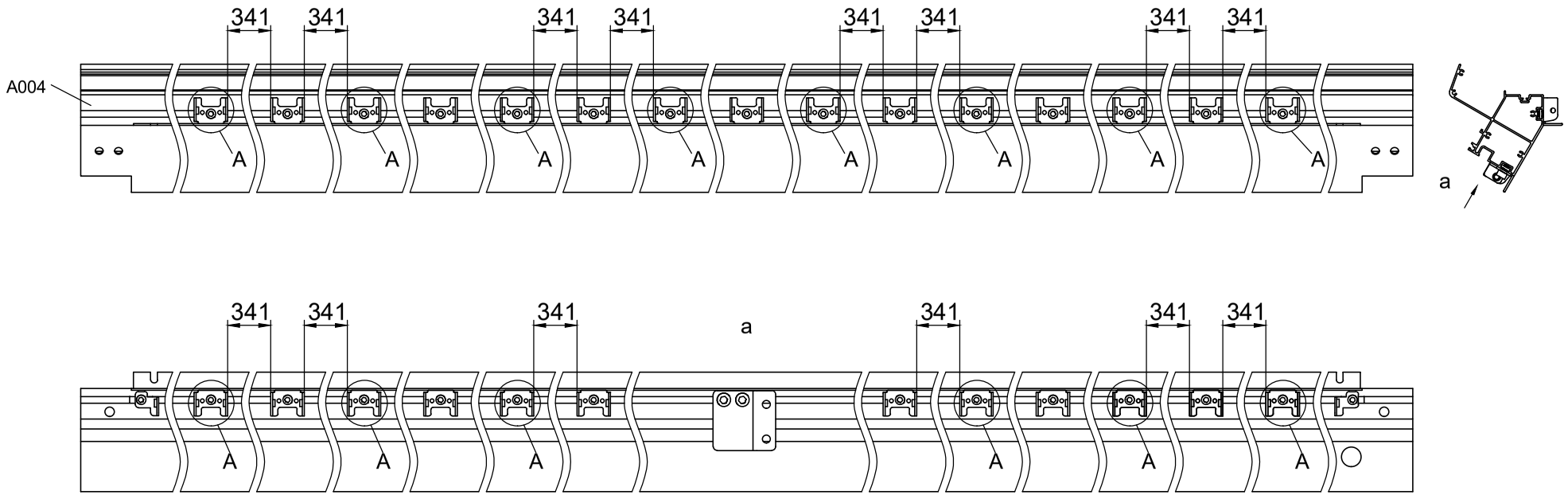

Part	NO.	QTY.	Length(MM)
	Si6-16	4	PCS
	J05	4	PCS
	L06	4	1400

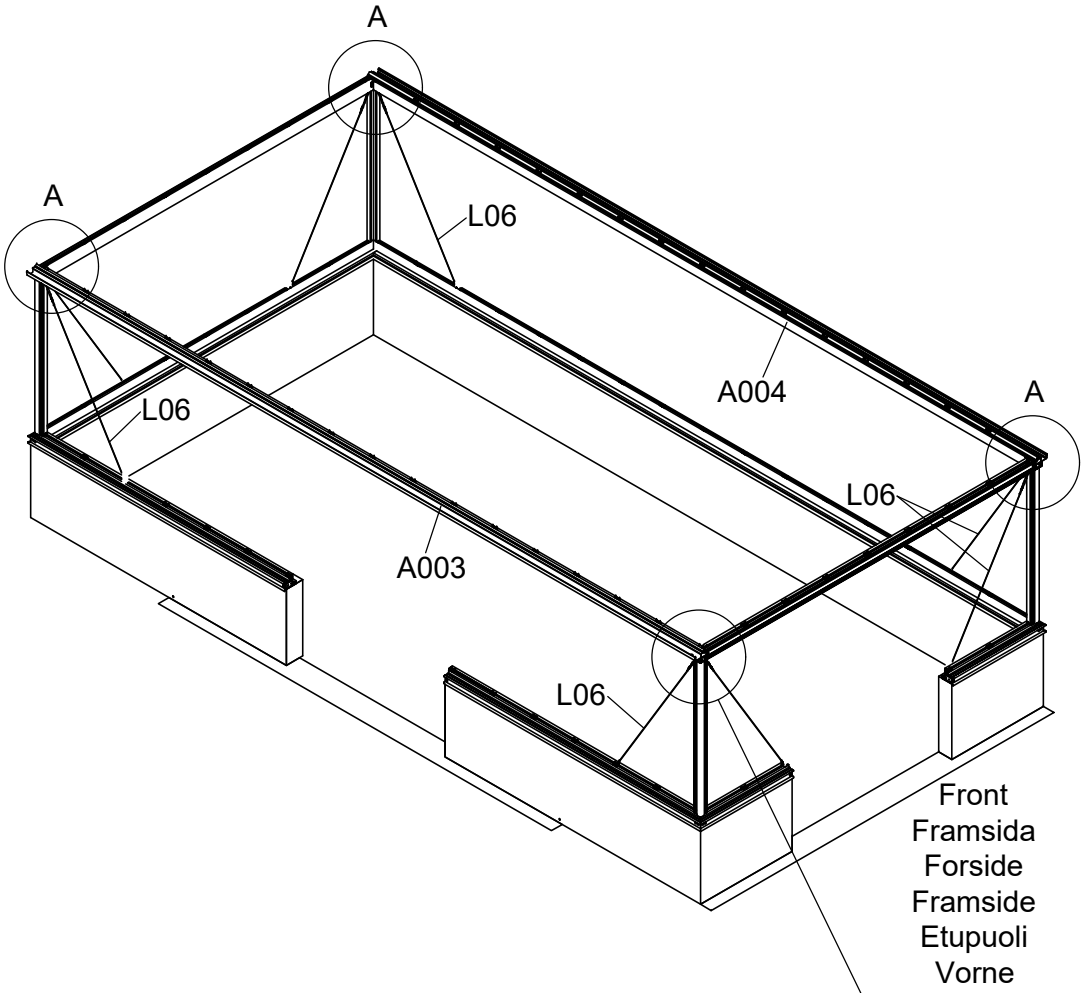

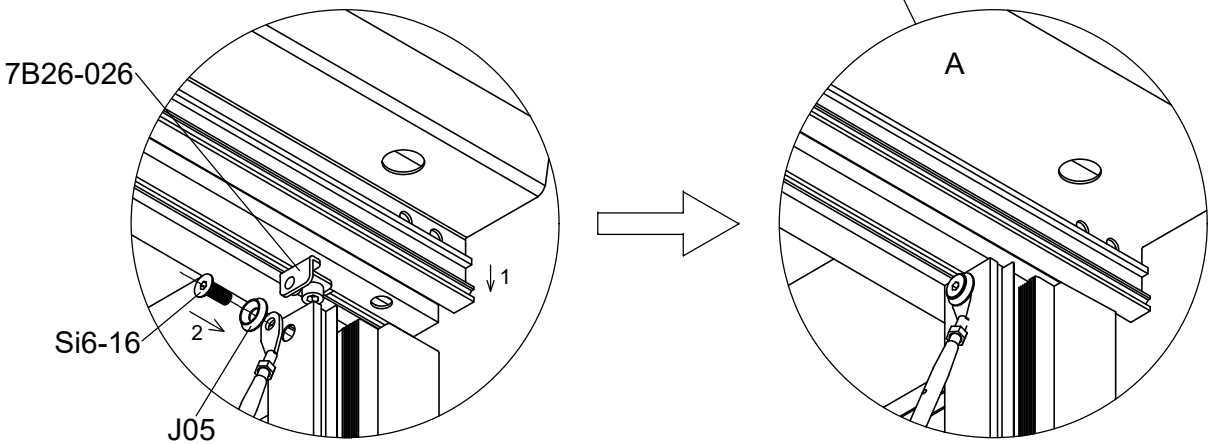

Part	NO.	QTY.	Length(MM)
	7B26-029	4	PCS
	M6-20	8	PCS

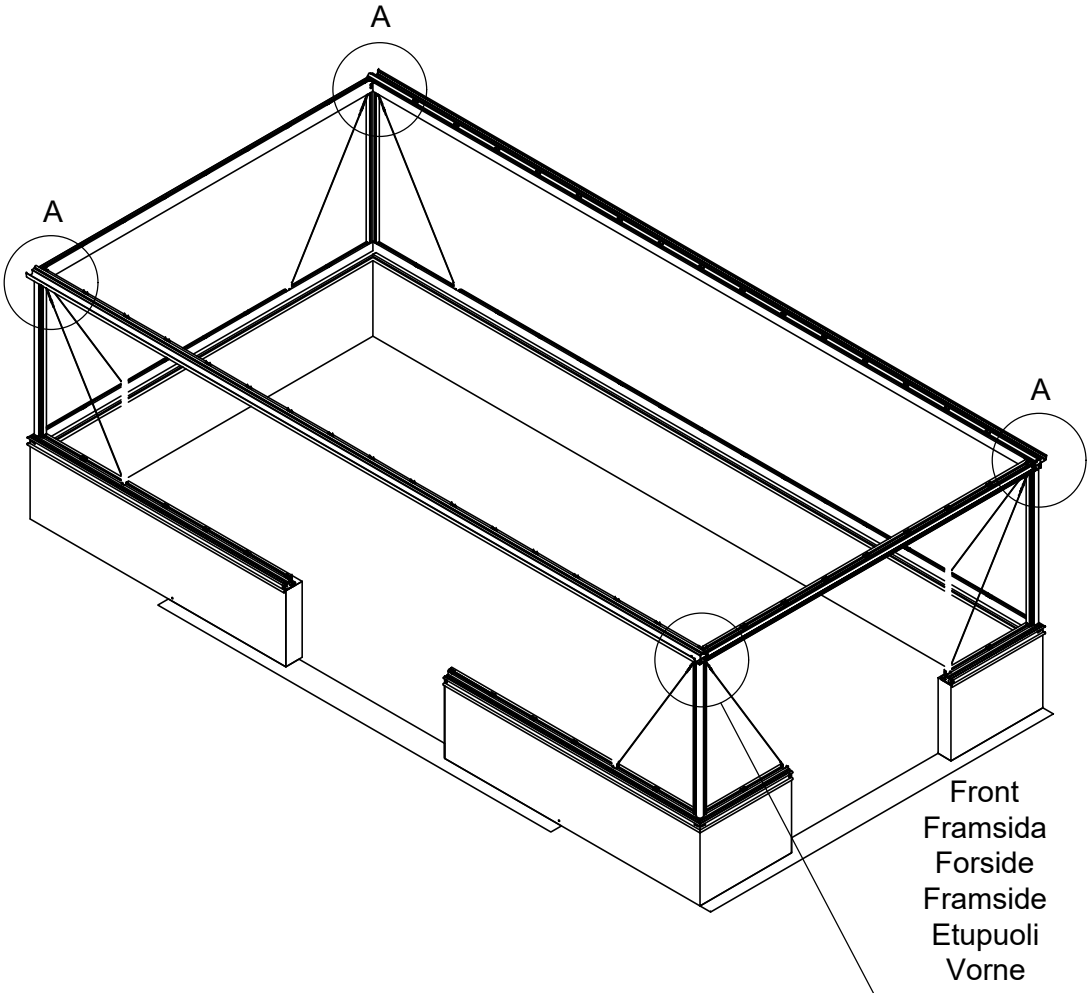

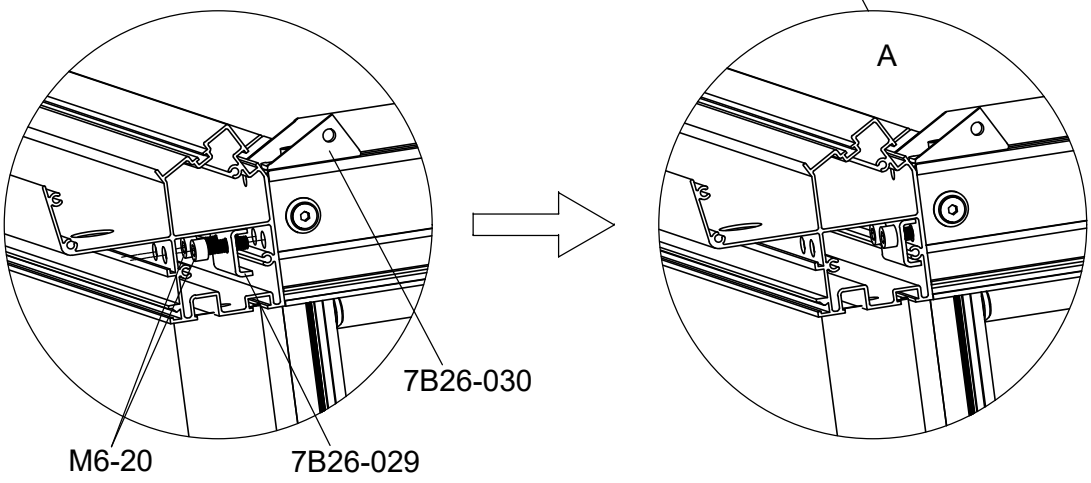

If you have chosen Side Windows, please assemble them from this step.
Please refer to the Side Window Instructions Page "7W1G-V3S 6/16 - 16/16".

Om du har valt sidofönster ska du montera dem från och med det här steget.
Se sidan med instruktioner för sidofönster "7W1G-V3S 6/16 - 16/16".

Hvis du har valgt sidevinduer, skal du montere dem fra dette trin og fremefter.
Se side 7W1G-V3S 6/16 - 16/16 i vejledningen til sidevinduer.

Hvis du har valgt Sidevinduer, vennligst sett dem sammen fra dette trinnet.
Vennligst se sidevindusinstruksjonene "7W1G-V3S 6/16 - 16/16".

Jos olet valinnut sivuikkunat, kokoa ne tästä vaiheesta alkaen.
Katso sivuikkunoiden ohjeet sivulta "7W1G-V3S 6/16 - 16/16".

Wenn Sie sich für Seitenfenster entschieden haben, montieren Sie diese bitte ab diesem Schritt.
Bitte beachten Sie die Anleitung für die Seitenfenster auf der Seite "7W1G-V3S 6/16 - 16/16".

Green Room®
BY WILLAB GARDEN

SH7W1G-V3S

If the Side Window is assembled on a new greenroom, please start with Page 6/16.
If the Side Window is added to an existing greenroom, please start with Page 1/16.

Vid montage på ett nytt Green Room, börja på sidan 6/16.
Vid eftermontage på ett befintligt Green Room börjar du på sidan 1/16.

Hvis sidevinduet monteres på et nyt Green Room, skal du starte på side 6/16.
Ved eftermontering på et eksisterende Green Room, skal du starte på side 1/16.

Hvis sidevinduet er montert på et nytt Green Room, start på side 6/16.
Ved ettermontering til et eksisterende Green Room, start på side 1/16.

Jos sivuikkuna asennetaan uuteen Green Room, aloita sivulta 6/16.
Jos sivuikkuna lisätään olemassa olevaan Green Room, aloita sivulta 1/16.

Wenn das Seitenfenster in einem neuen Green Room, montiert wird, beginnen Sie bitte mit Seite 6/16.
Wenn das Seitenfenster in einen bestehenden Green Room, eingebaut wird, beginnen Sie bitte mit Seite 1/16.

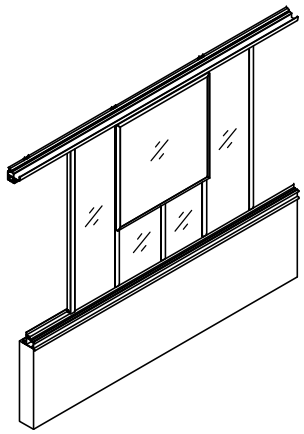

Part	NO.	QTY.					Length(MM)
		3051	3052	3053	3058	3059	
	40A-Y30	8	8	8	8	8	1235
	Si6-16	12	14	14	14	14	PCS
	J05	12	14	14	14	14	PCS

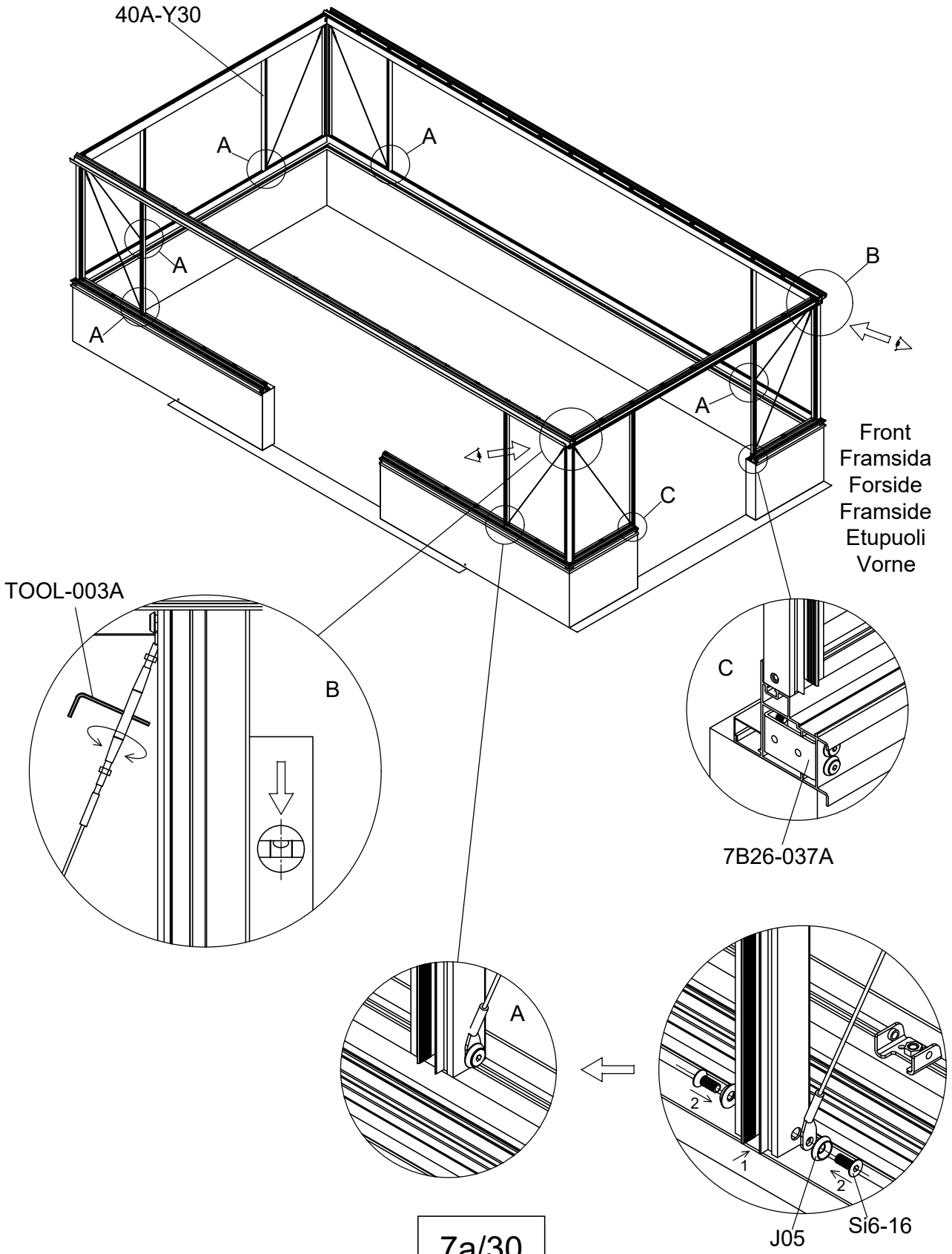

Part	NO.	QTY.															Length (MM)
		3051			3052			3053			3058			3059			
		3051	3140P-S	3140P-S-2	3052	3140P-S	3140P-S-2	3053	3140P-S	3140P-S-2	3058	3140P-S	3140P-S-2	3059	3140P-S	3140P-S-2	
	40A-Y30	2	12	0	5	13	0	6	14	2	9	14	3	10	14	6	1235
	Si6-16	20	48	0	30	52	0	34	56	8	46	56	12	50	56	24	PCS
	J05	20	48	0	30	52	0	34	56	8	46	56	12	50	56	24	PCS

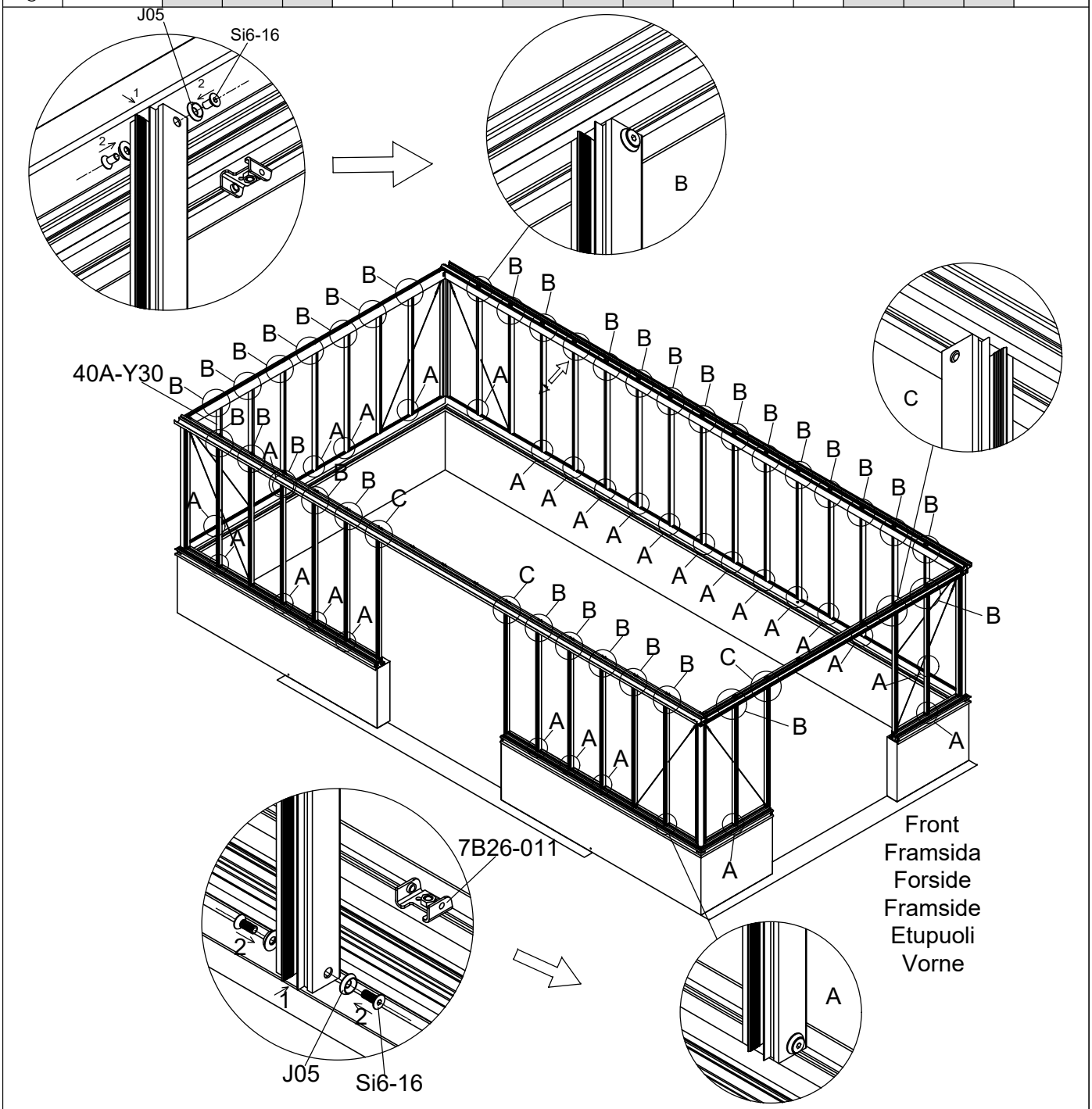

3051	3052	3053	3058	3059
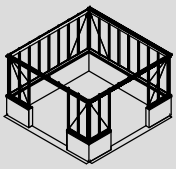	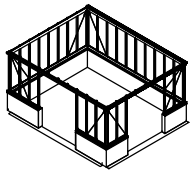	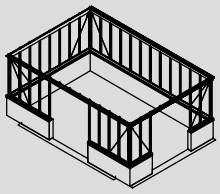	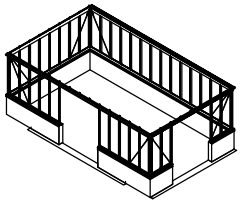	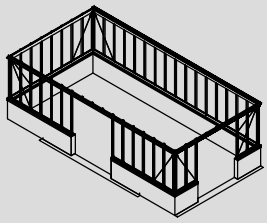

Part	NO.	QTY.	Length(MM)
	40X-Y31R	2	418
	40X-Y31L	2	418
	40X-Y32	2	859
	Si6-16	12	PCS
	J05	12	PCS

Part	NO.	QTY.	Length(MM)	CTN NO.
	40X-Y31A-R	2	201	3140P-S
	40X-Y31A-L	2	201	3140P-S
	50X-Y31R	2	633	3140P-S
	50X-Y31L	2	633	3140P-S
	Si6-16	16	PCS	3140P-S
	J05	16	PCS	3140P-S

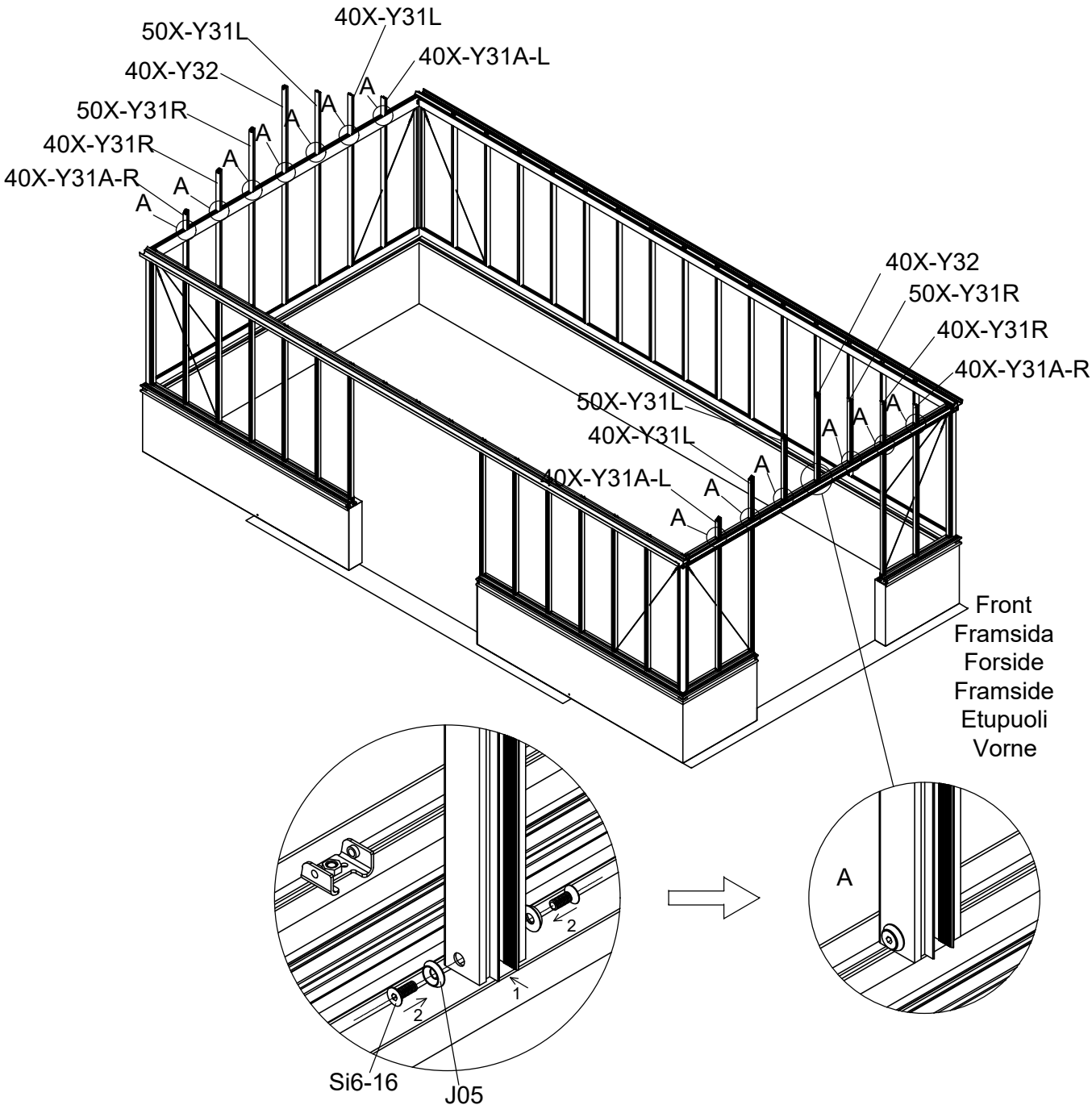

Part	Product	NO.	Length (MM)	QTY.	Code
	3051	40X-Y63-4	3118	1	A005
	3052	40X-Y63-5	3869		
	3053	40X-Y63-6	4620		
	3058	40X-Y63-7	5371		
	3059	40X-Y63-8	6122		

Part	NO.	QTY.										Length (MM)
		3051		3052		3053		3058		3059		
		3140P -S	3140P -S-2	3140P -S	3140P -S-2	3140P -S	3140P -S-2	3140P -S	3140P -S-2	3140P -S	3140P -S-2	
	7B26-011	6	0	6	0	6	2	6	2	6	4	PCS
	Ma6-12	6	0	6	0	6	2	6	2	6	4	PCS
	M6	6	0	6	0	6	2	6	2	6	4	PCS

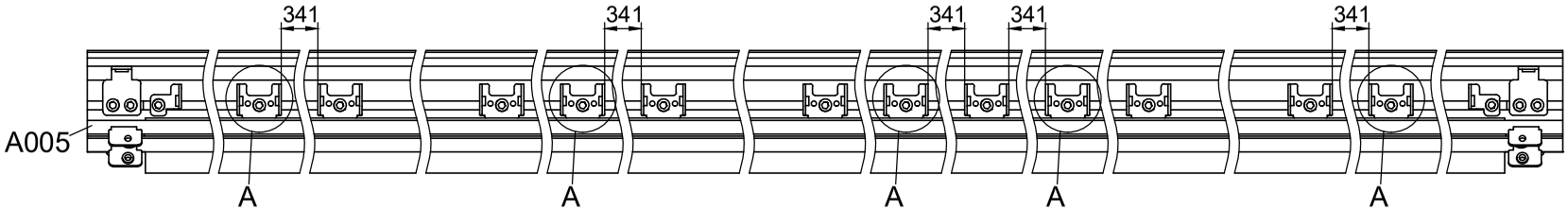

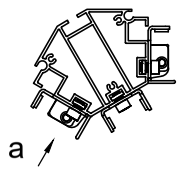

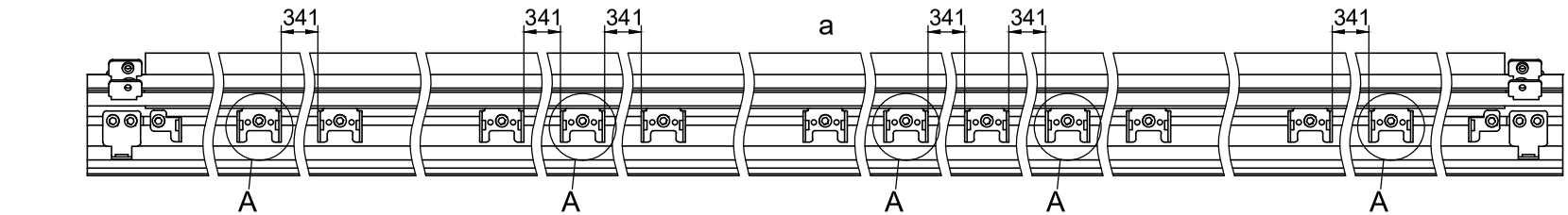

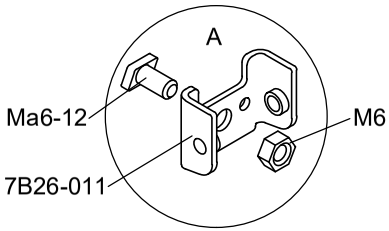

Part	NO.	QTY.	Length(MM)
	M6-8	4	PCS

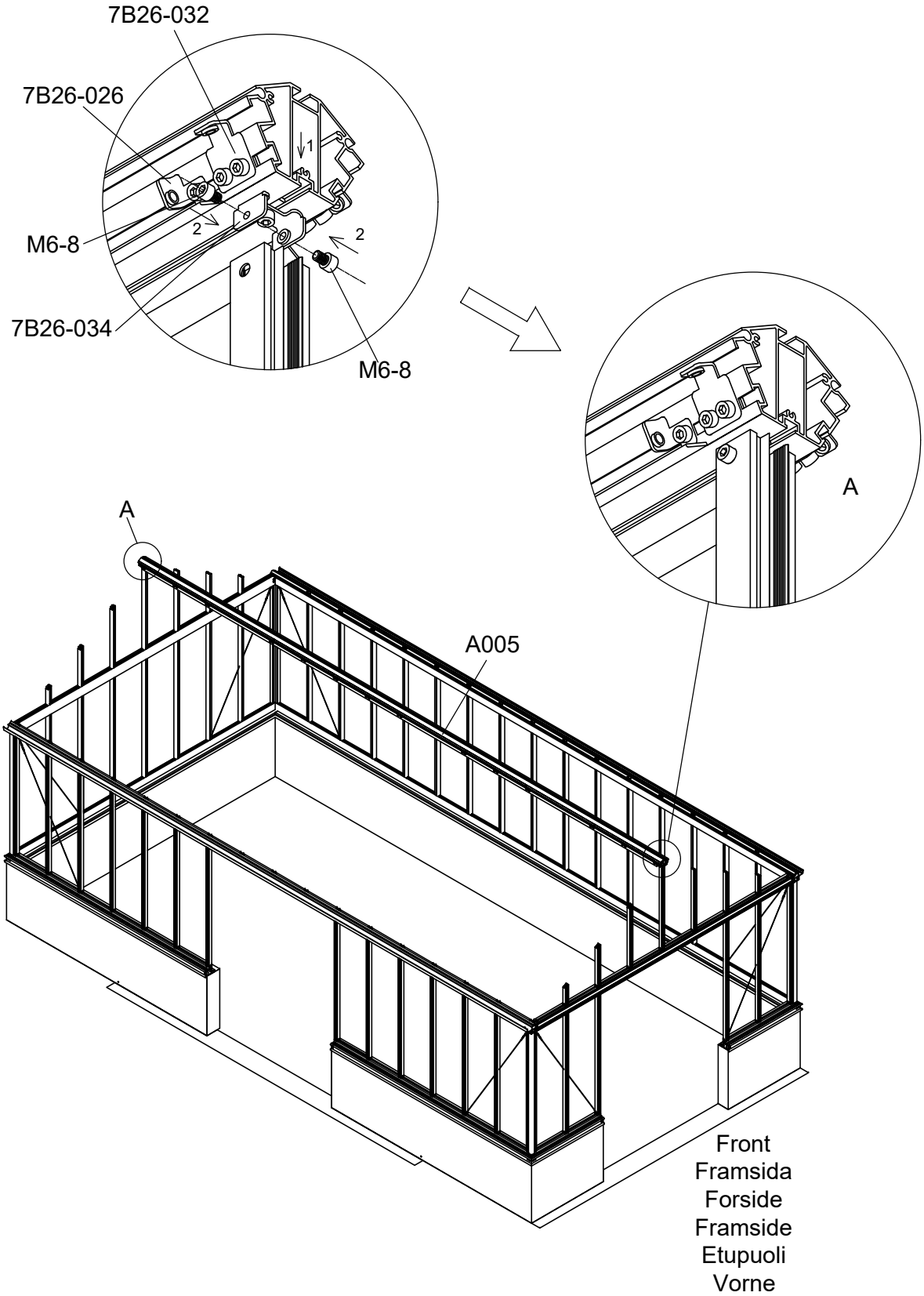

Part	NO.	QTY.					Length (MM)	Code
		3051	3052	3053	3058	3059		
	L17	4	4	4	0	0	2240	A019
	L24	0	0	0	4	4	2789	

Part	NO.	QTY.	Length(MM)	CTN NO.
	40X-Y21	2	1755	
	40X-Y22	2	1755	
	Si6-16	8	PCS	
	J05	8	PCS	
	S6-10	16	PCS	
	7B26-033	4	PCS	
	S6-10	32	PCS	3140P-S

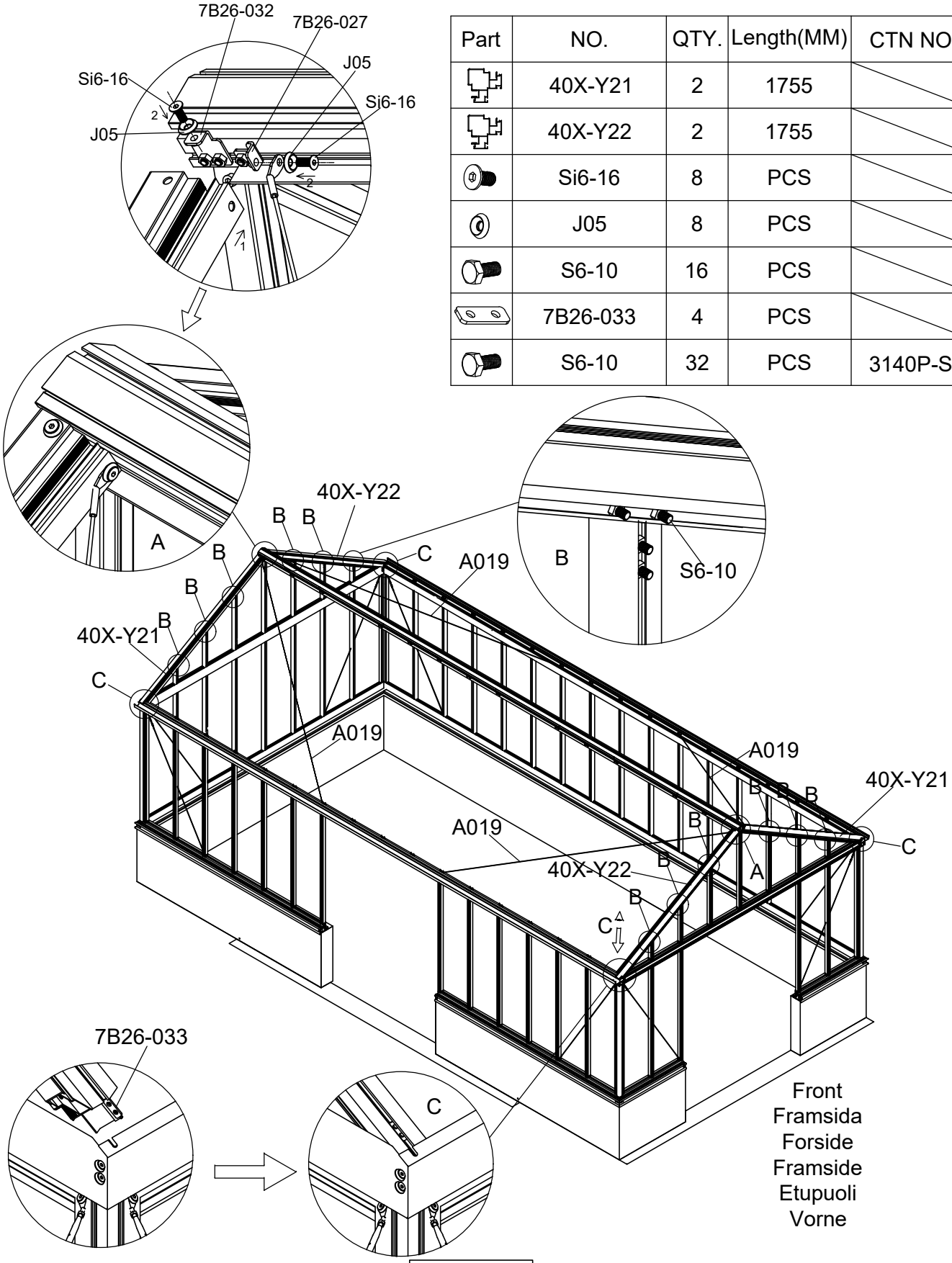

Part	NO.	QTY.	Length(MM)	CTN NO.
	7B26-005	8	PCS	3140P-S
	Mi6	32	PCS	3140P-S

Part	NO.	QTY.	Length(MM)
	7B26-005	4	PCS
	Mi6	16	PCS
	J05	4	PCS
	Si6-12	4	PCS
	M6-8	4	PCS

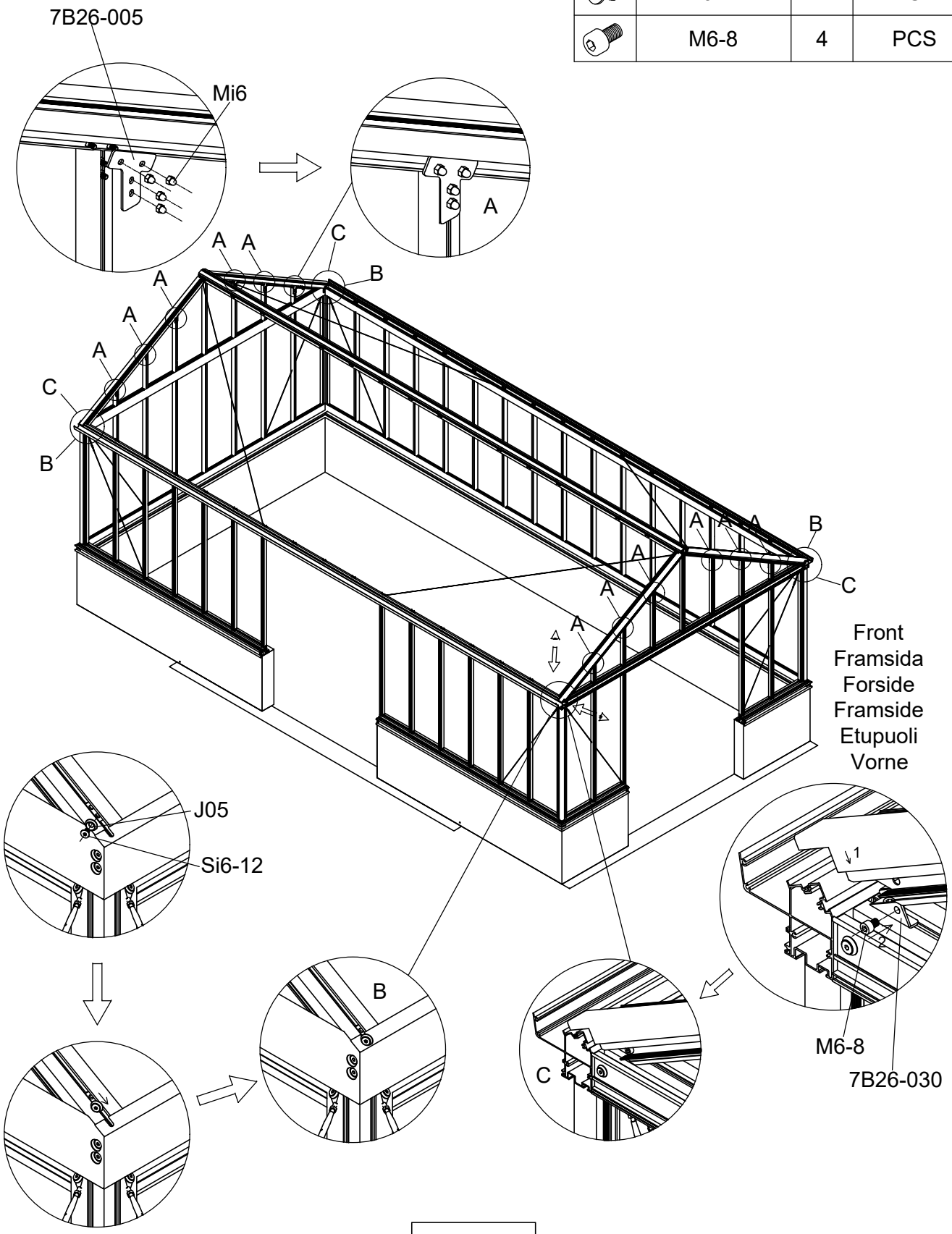

Part	NO.	QTY.									Length (MM)	CTN NO.
		3051			3052			3053				
		3051	3140P-S	3140P-S-2	3052	3140P-S	3140P-S-2	3053	3140P-S	3140P-S-2		
	40X-Y33R	2	0	0	4	0	0	4	0	0	1716	A015
	40X-Y33L	2	0	0	4	0	0	4	0	0	1716	A016
	Si5-16	8	4	0	16	4	4	16	4	4	PCS	
	J01	8	4	0	16	4	4	16	4	4	PCS	
	40X-Y34C	0	2	0	0	2	2	0	2	2	713	
	40X-Y33-C	0	2	0	0	2	2	0	2	2	839	

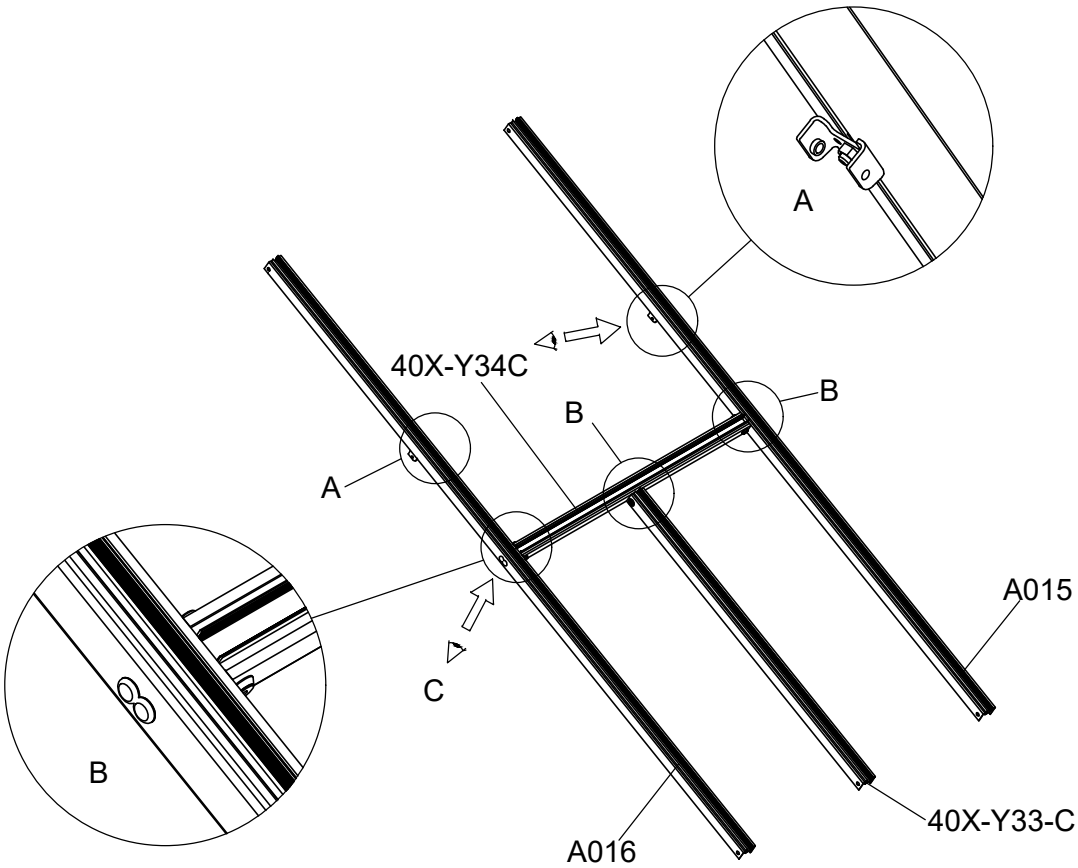

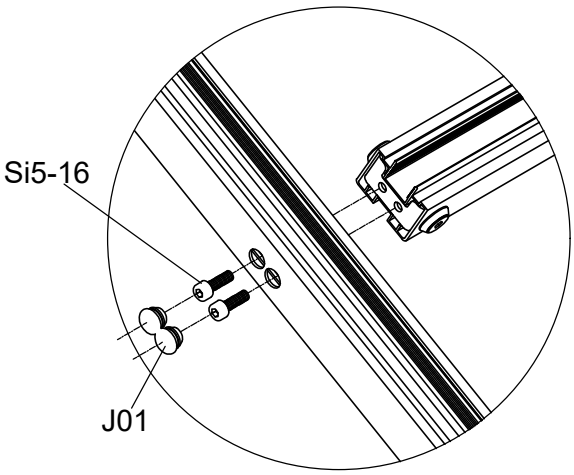

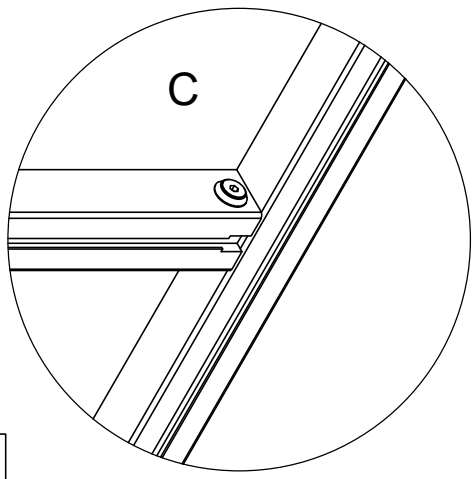

Part	NO.	QTY.						Length (MM)	CTN NO.
		3058			3059				
		3058	3140P-S	3140P-S-2	3059	3140P-S	3140P-S-2		
	40X-Y33HR	6	0	0	6	0	0	1716	A015
	40X-Y33HL	6	0	0	6	0	0	1716	A016
	Si5-16	24	4	8	24	4	8	PCS	
	J01	24	4	8	24	4	8	PCS	
	40X-Y34C	0	2	4	0	2	4	713	
	40X-Y33-C	0	2	4	0	2	4	839	

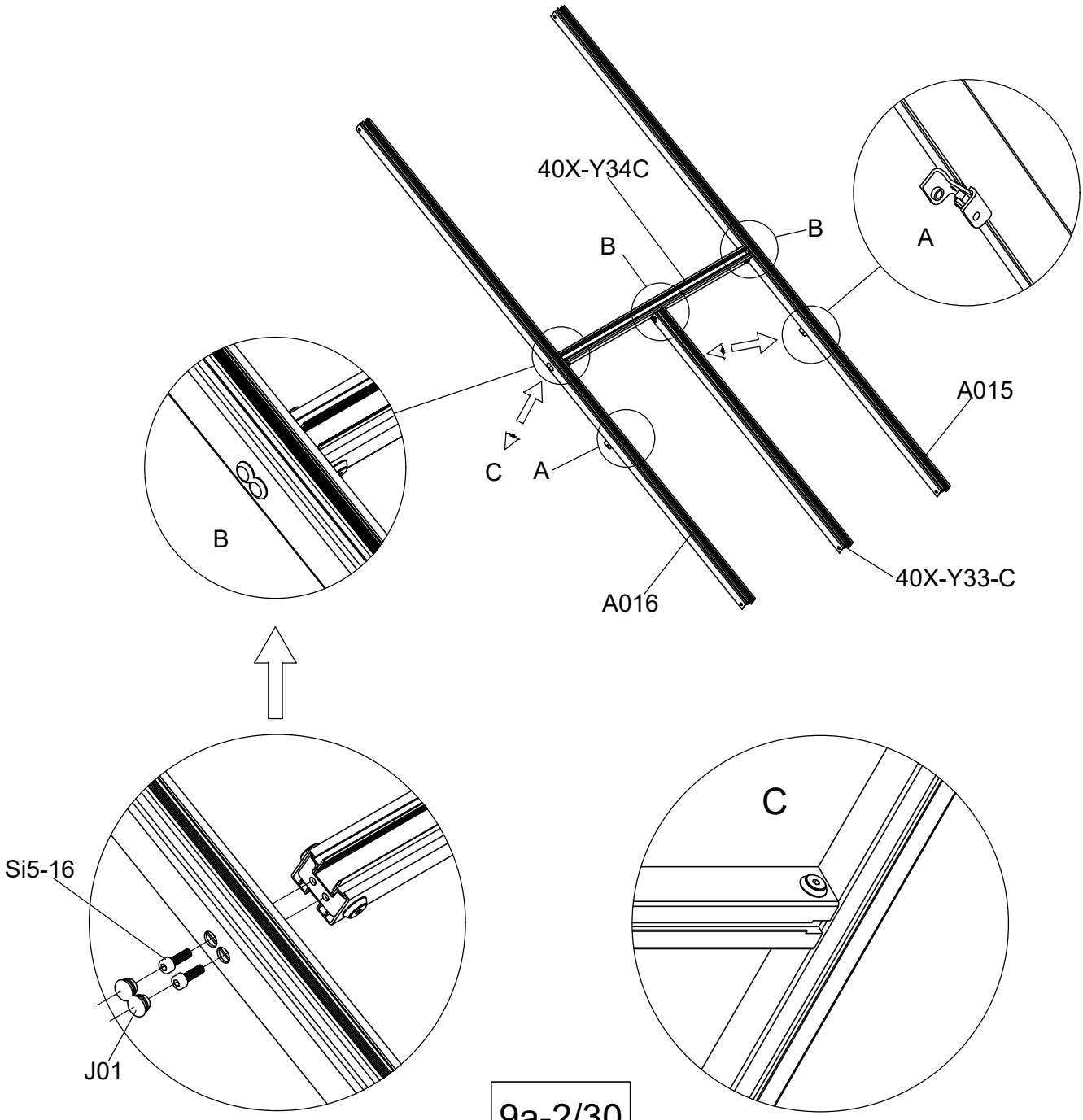

Part	NO.	QTY.															Length (MM)	CTN NO.
		3051			3052			3053			3058			3059				
		3051	3140P -S	3140P -S-2	3052	3140P -S	3140P -S-2	3053	3140P -S	3140P -S-2	3058	3140P -S	3140P -S-2	3059	3140P -S	3140P -S-2		
	40X-Y33-A	2	0	0	0	0	0	2	0	0	0	0	0	0	0	0	1716	A017
	40X-Y33H-A	0	0	0	0	0	0	0	0	0	0	0	0	2	0	0	1716	
	40X-Y33-B	0	6	0	0	6	0	0	6	2	0	6	2	0	6	4	1716	

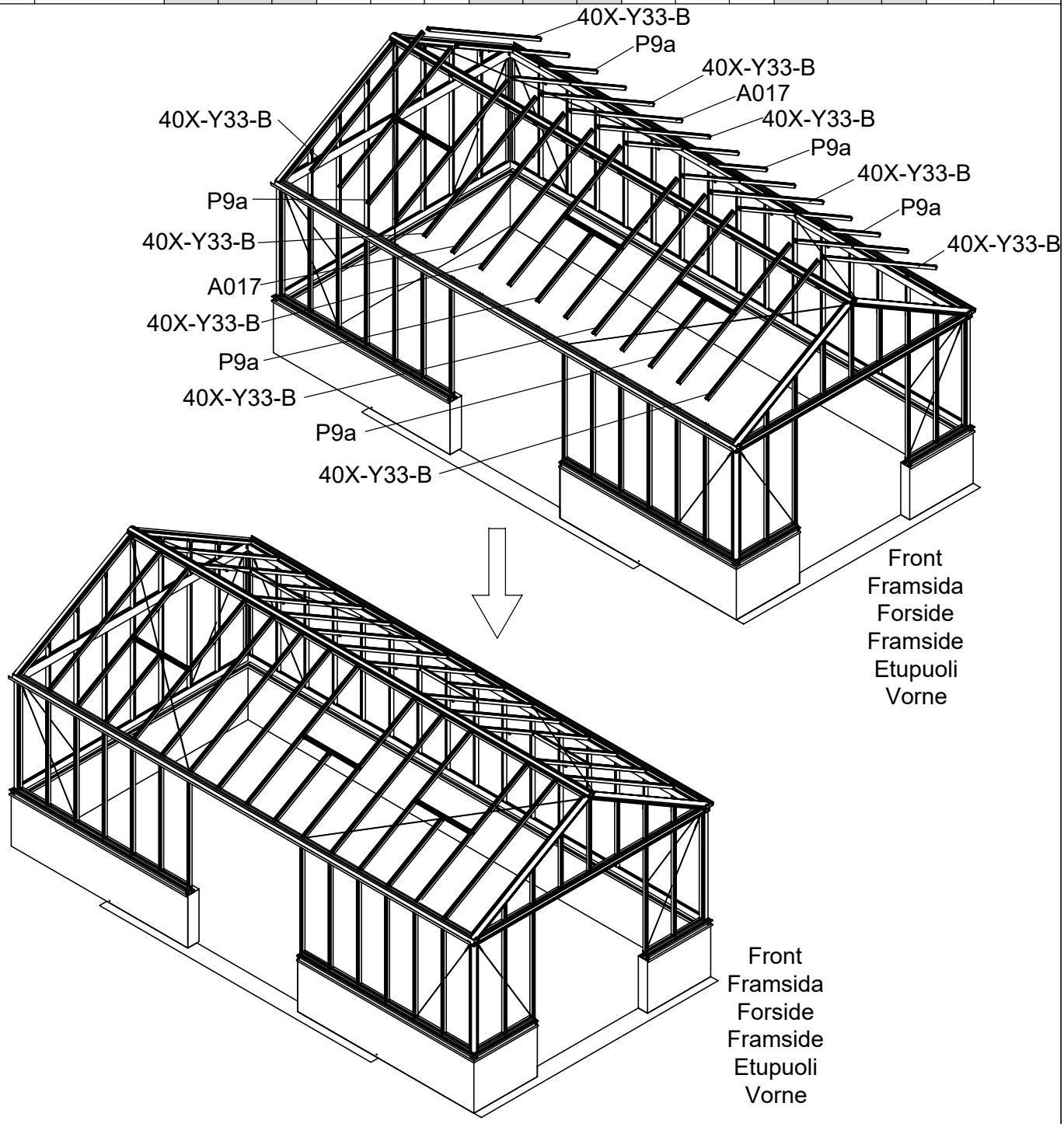

3051	3052	3053	3058	3059
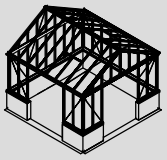	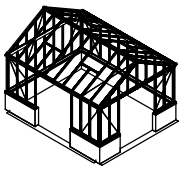	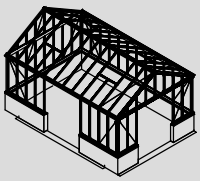	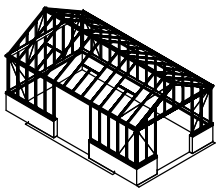	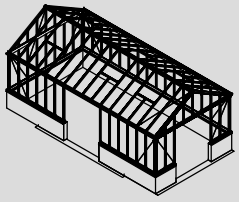

Part	NO.	QTY.															Length (MM)
		3051			3052			3053			3058			3059			
		3051	3140P-S	3140P-S-2	3052	3140P-S	3140P-S-2	3053	3140P-S	3140P-S-2	3058	3140P-S	3140P-S-2	3059	3140P-S	3140P-S-2	
	Si6-16	24	28	0	32	28	4	40	28	12	48	28	16	56	28	24	PCS
	J05	24	28	0	32	28	4	40	28	12	48	28	16	56	28	24	PCS

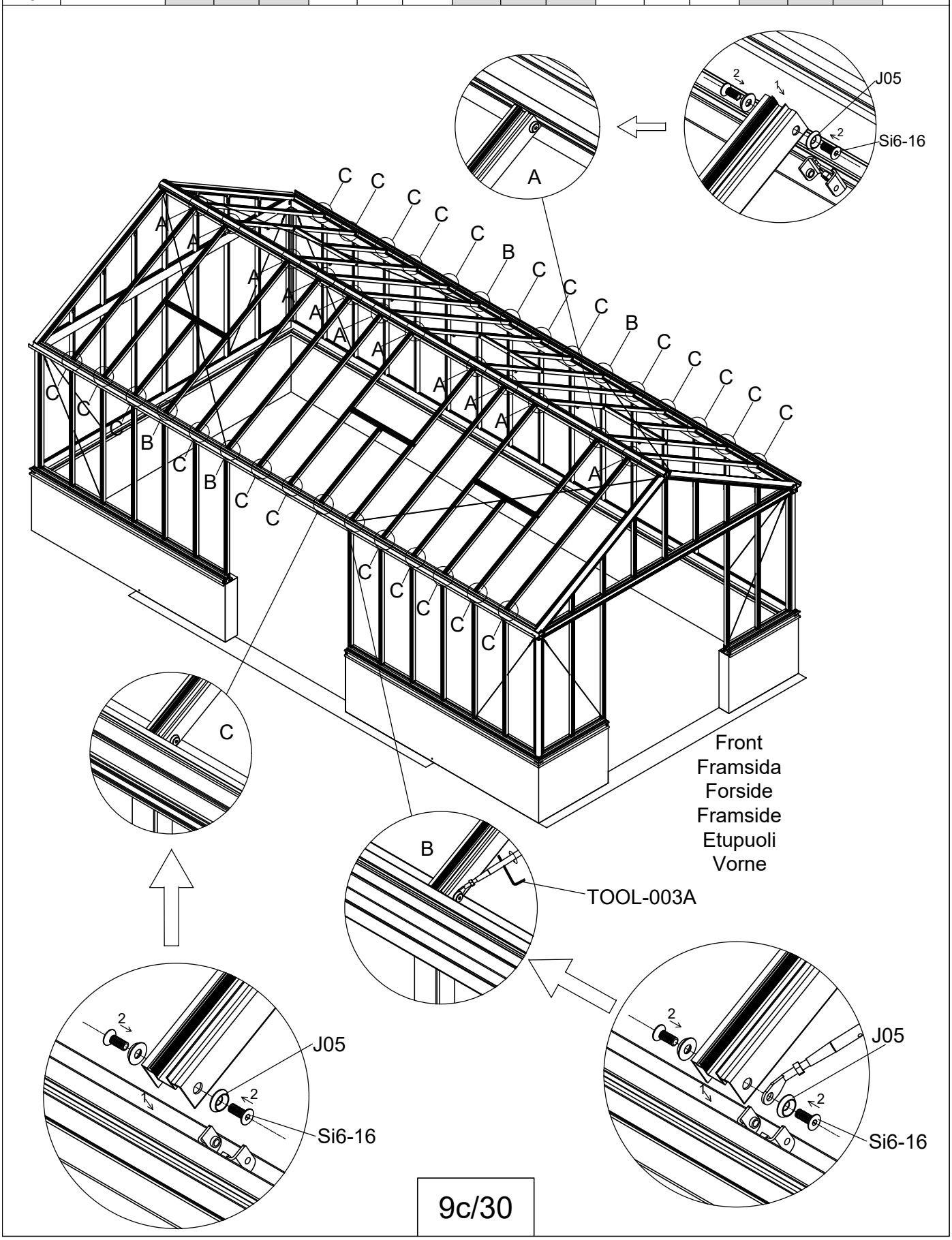

Part	NO.	QTY.			Length(MM)
		3051	3052	3053	
	40X-Y35	3	4	5	1000
	Si6-16	12	16	20	PCS
	J05	12	16	20	PCS

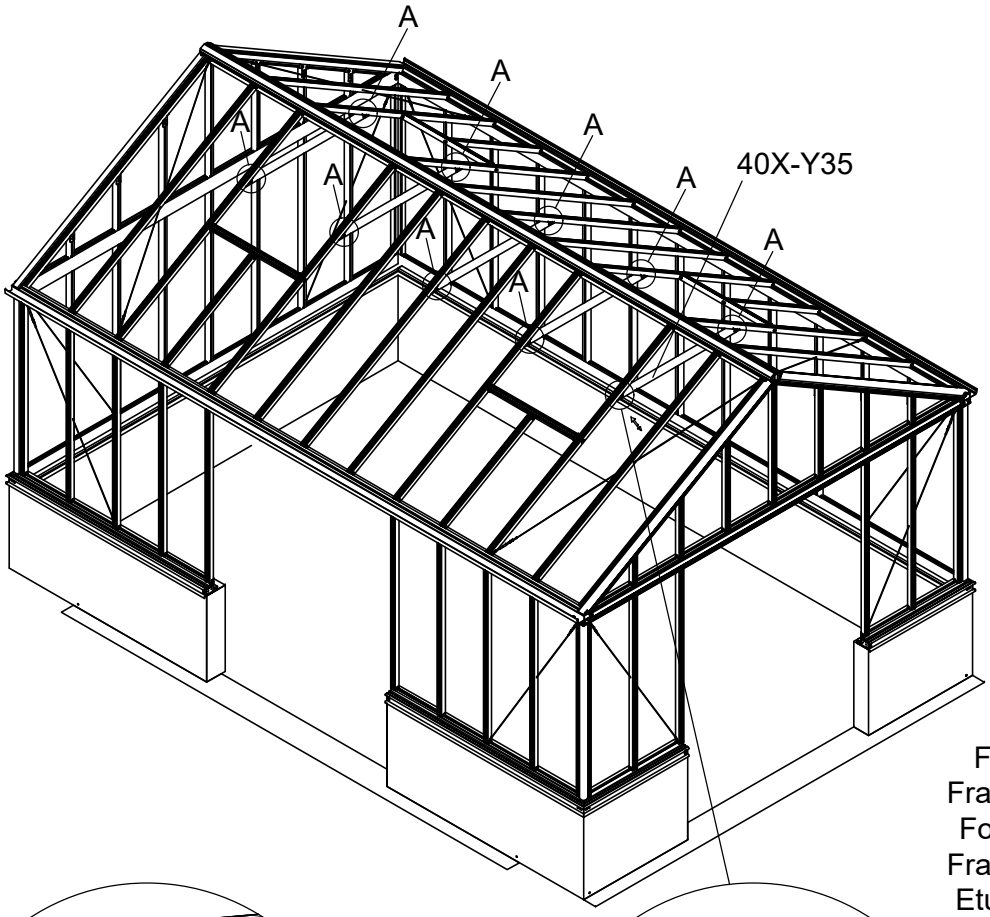

Front
Framsida
Forside
Framside
Etupuoli
Vorne

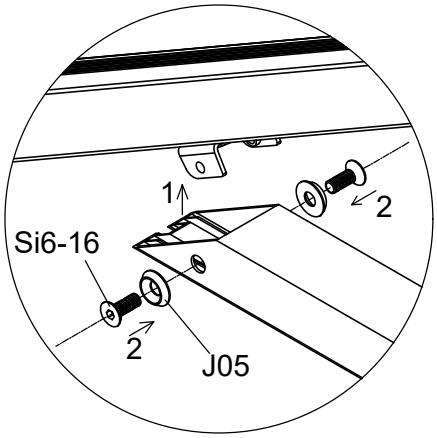

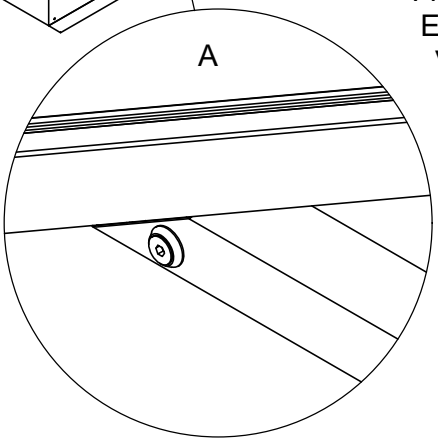

3051	3052	3053
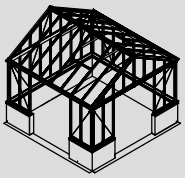	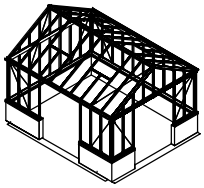	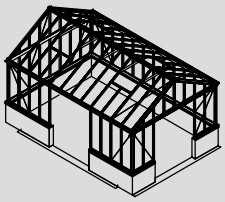

Part	NO.	QTY.		Length(MM)
		3058	3059	
	40X-Y35-1960	6	7	1960
	Si6-16	24	28	PCS
	J05	24	28	PCS

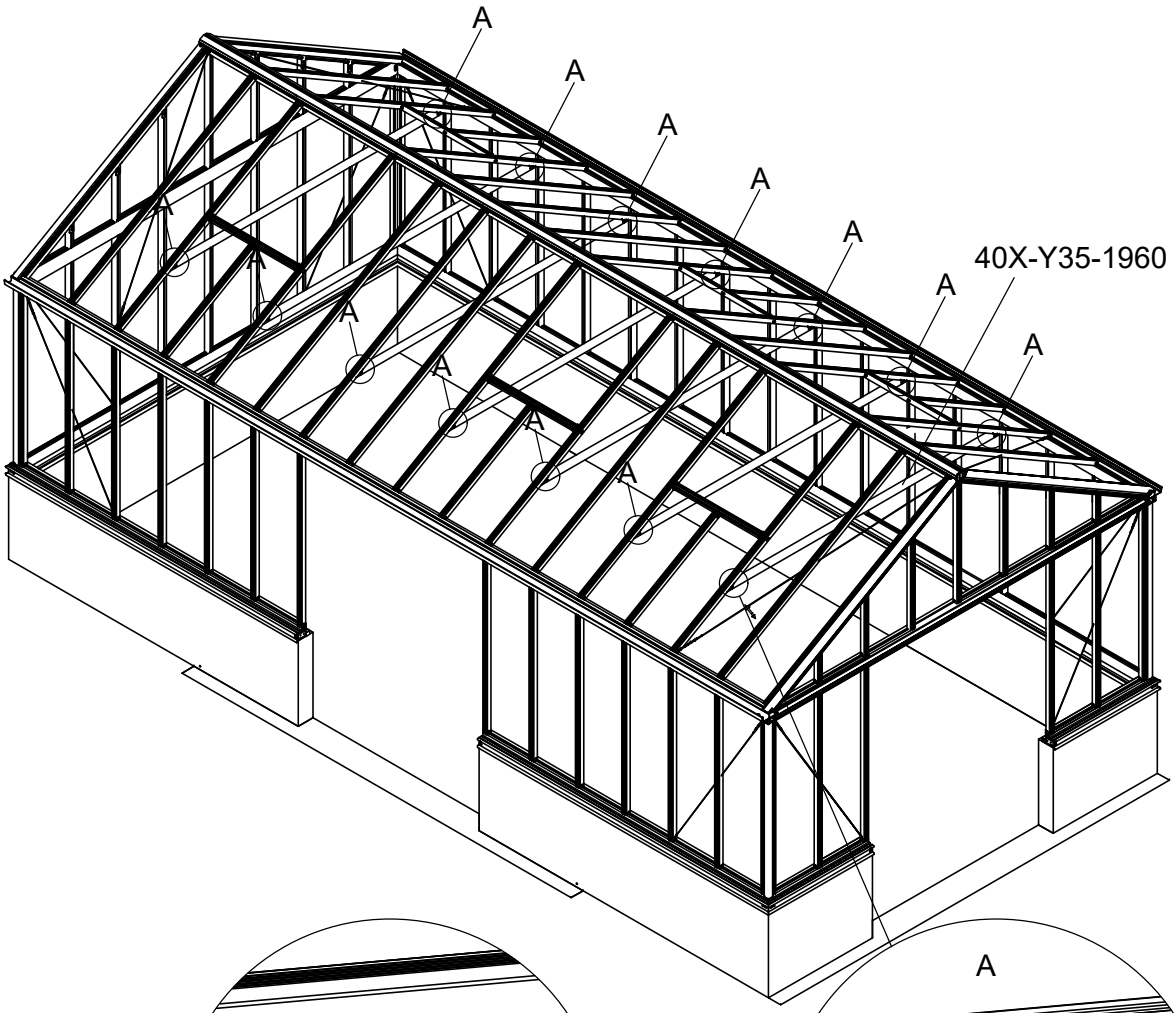

Front
Framsida
Forside
Framside
Etupuoli
Vorne

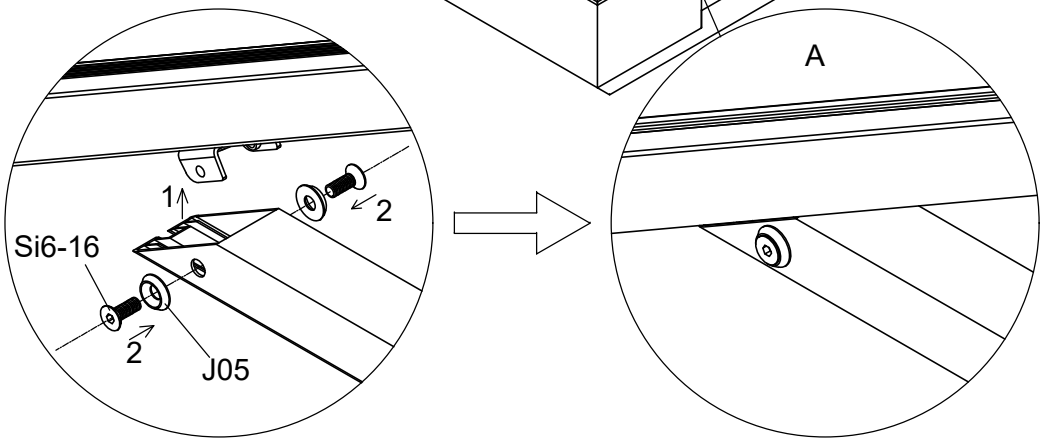

3058	3059
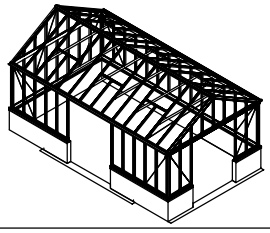	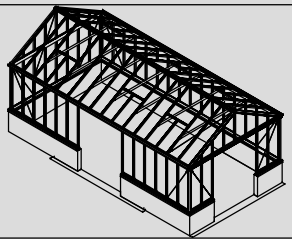

Part	NO.	QTY.					Length(MM)
		3051	3052	3053	3058	3059	
	354×1262	8	10	12	14	16	1262

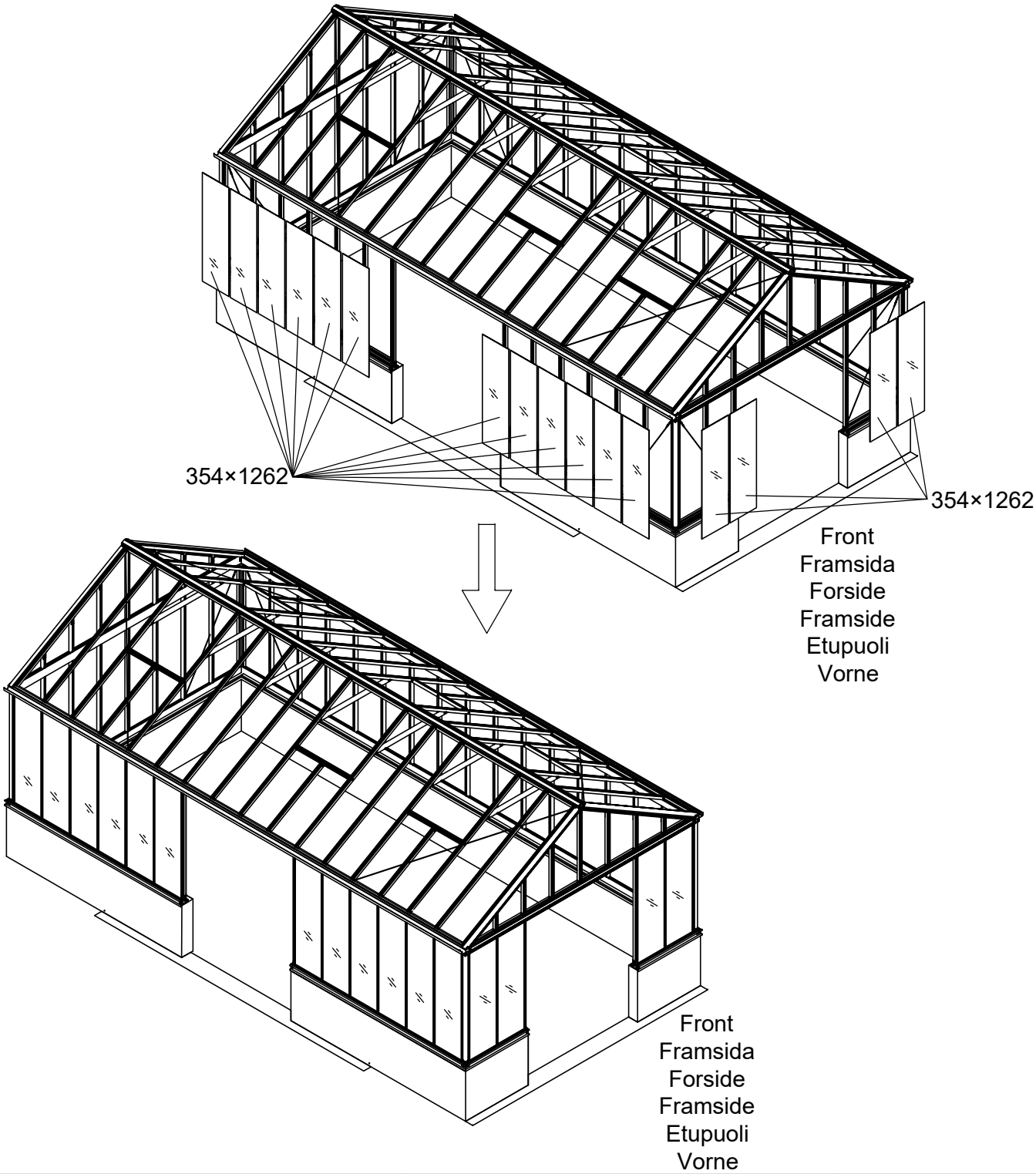

3051	3052	3053	3058	3059
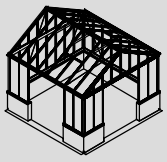	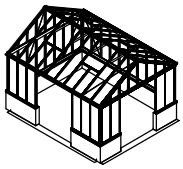	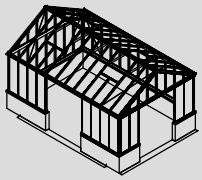	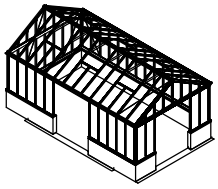	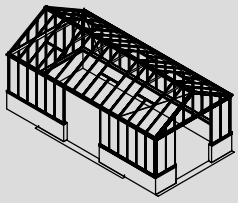

Part	NO.	QTY.					Length(MM)
		3051	3052	3053	3058	3059	
	354×1262	16	18	20	22	24	1262

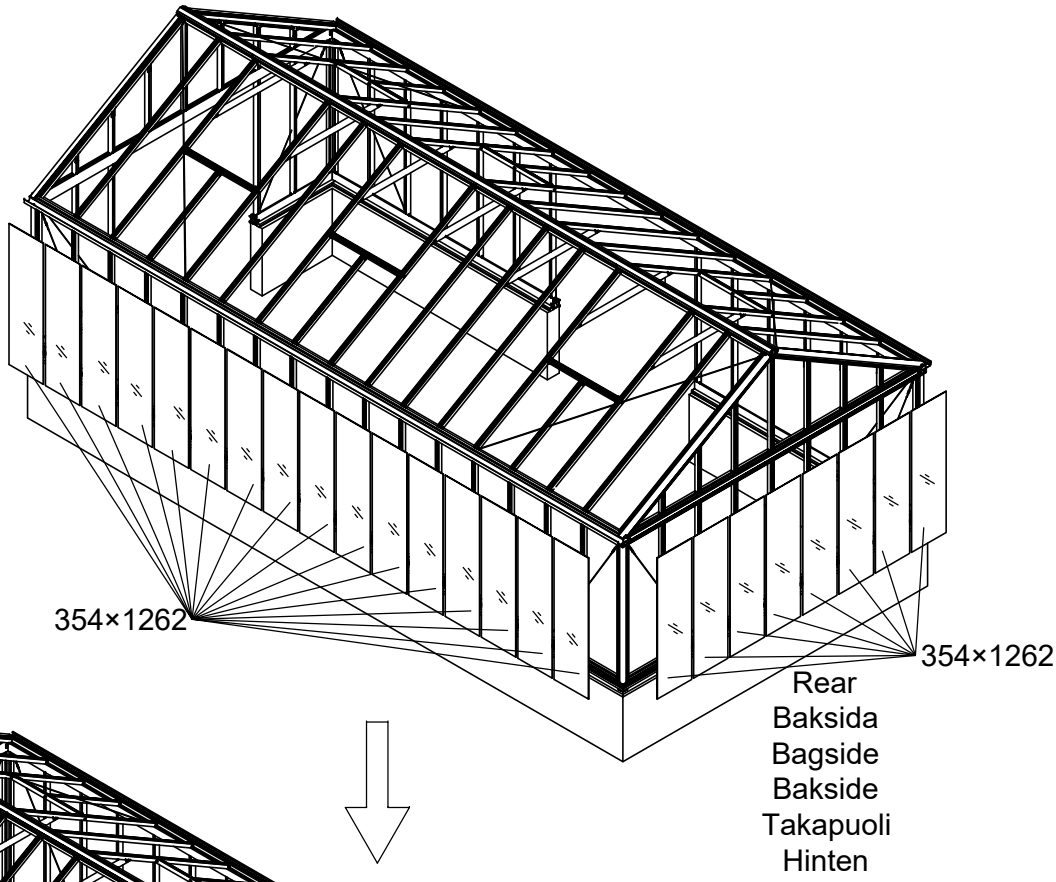

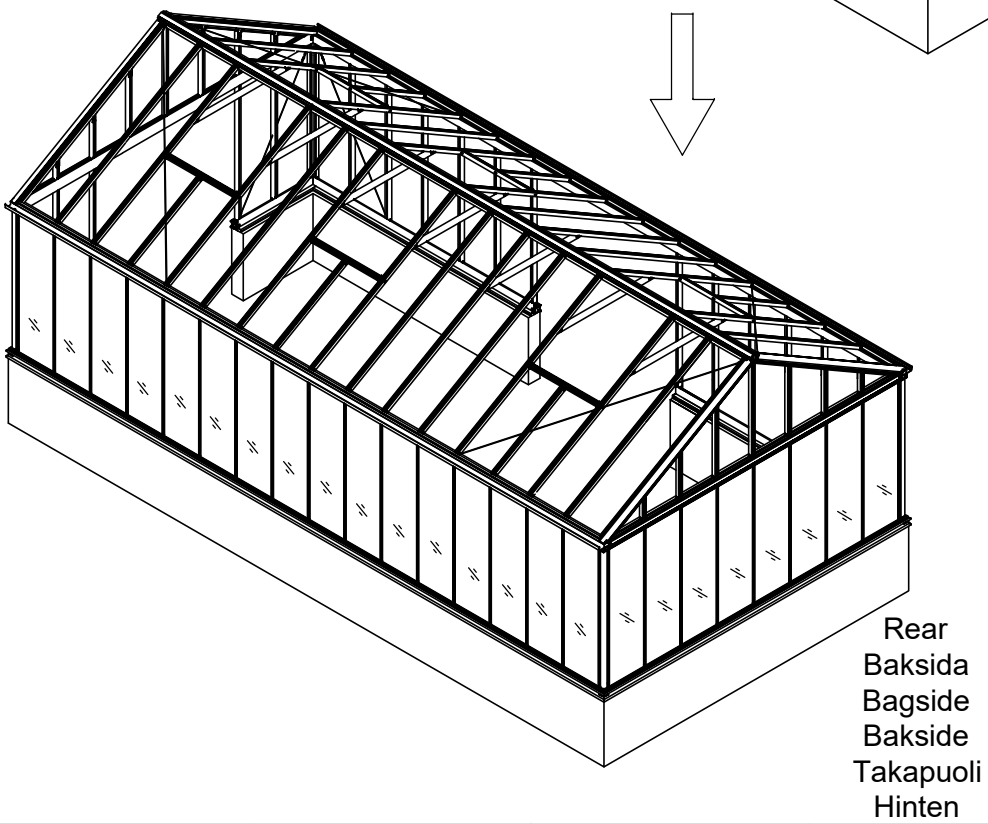

3051	3052	3053	3058	3059
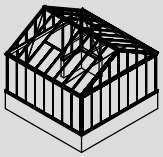	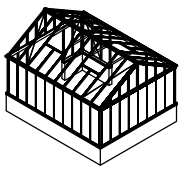	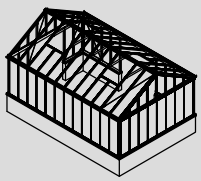	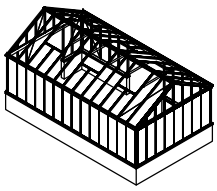	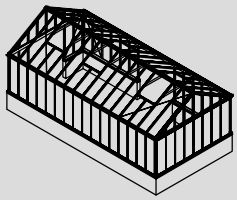

Part	Product	NO.	Length (MM)	QTY.	CTN NO.	Code
	3051	40X-Y14	3149	1	3043P-S-BASE4	A006
	3052	40X-Y15-5	3900	1	3043P-S-BASE5	
	3053	40X-Y15-6	4651	1	3043P-S-BASE6	
	3058	40X-Y15-7	5402	1	3043P-S-BASE7	
	3059	40X-Y15-8	6153	1	3043P-S-BASE8	
	3051	40A-Y15-R	842	1	3043PA-S-4	A012
	3052	50A-Y15-R	1218	1	3043PA-S-5	
	3053	40A-S15-6R	1593	1	3043PA-S-6	
	3058	40A-S15-7R	1969	1	3043PA-S-7	
	3059	40A-S15-8R	2344	1	3043PA-S-8	
	3051	40A-Y15-L	842	1	3043PA-S-4	A013
	3052	50A-Y15-L	1218	1	3043PA-S-5	
	3053	40A-S15-6L	1593	1	3043PA-S-6	
	3058	40A-S15-7L	1969	1	3043PA-S-7	
	3059	40A-S15-8L	2344	1	3043PA-S-8	

Part	NO.	Length(MM)	QTY.	CTN NO.
	40X-Y14	3149	1	3043PA-S-4G
	40A-Y15-R	842	1	3043PA-S-4
	40A-Y15-L	842	1	3043PA-S-4

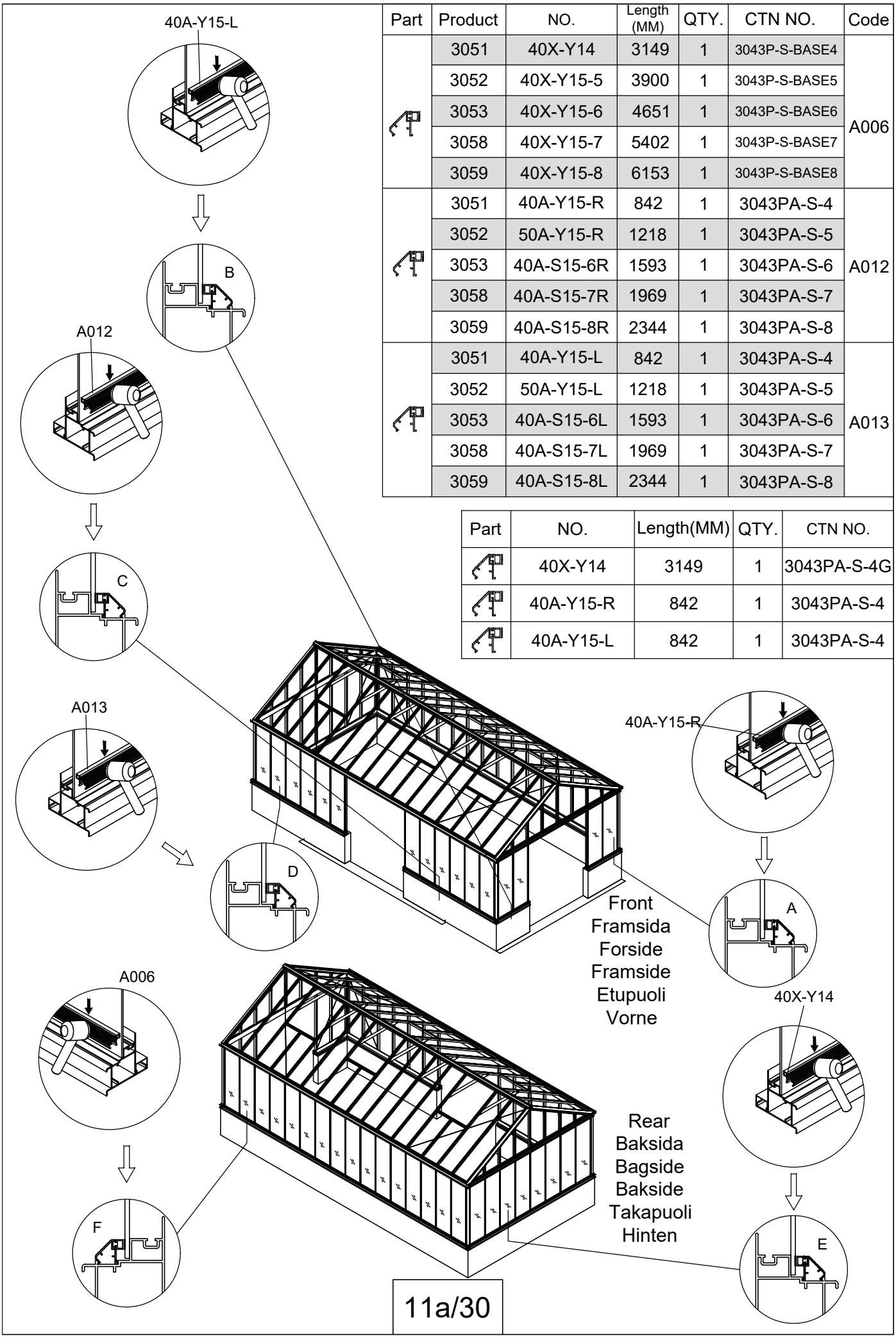

Part	NO.	QTY.															Length (MM)
		3051			3052			3053			3058			3059			
		3051	3140P -S	3140P -S-2	3052	3140P -S	3140P -S-2	3053	3140P -S	3140P -S-2	3058	3140P -S	3140P -S-2	3059	3140P -S	3140P -S-2	
	40A-Y01	7	4	0	9	4	0	9	6	0	11	6	0	11	6	2	1235
	40A-Y02	1	0	0	1	0	0	1	0	0	1	0	0	1	0	0	1235

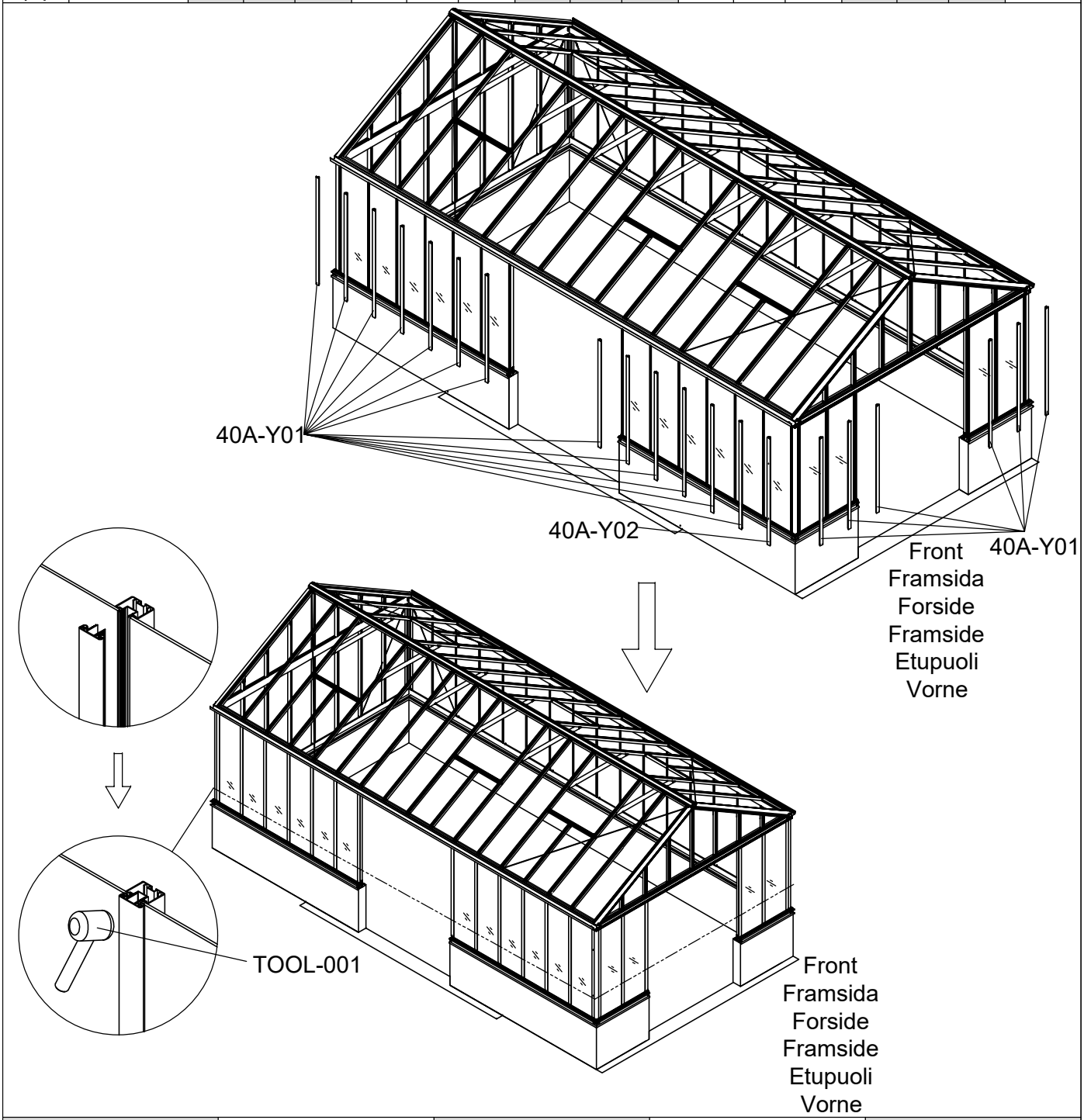

3051	3052	3053	3058	3059
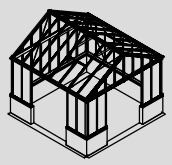	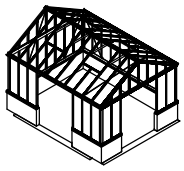	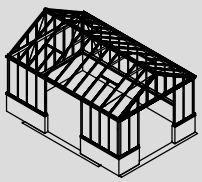	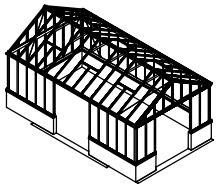	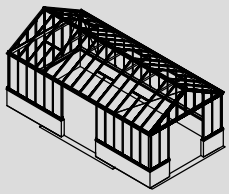

Part	NO.	QTY.															Length (MM)
		3051			3052			3053			3058			3059			
		3051	3140P -S	3140P -S-2	3052	3140P -S	3140P -S-2	3053	3140P -S	3140P -S-2	3058	3140P -S	3140P -S-2	3059	3140P -S	3140P -S-2	
	40A-Y01	9	8	0	10	9	0	11	8	2	12	8	3	13	8	4	1235
	40A-Y02	1	0	0	1	0	0	1	0	0	1	0	0	1	0	0	1235

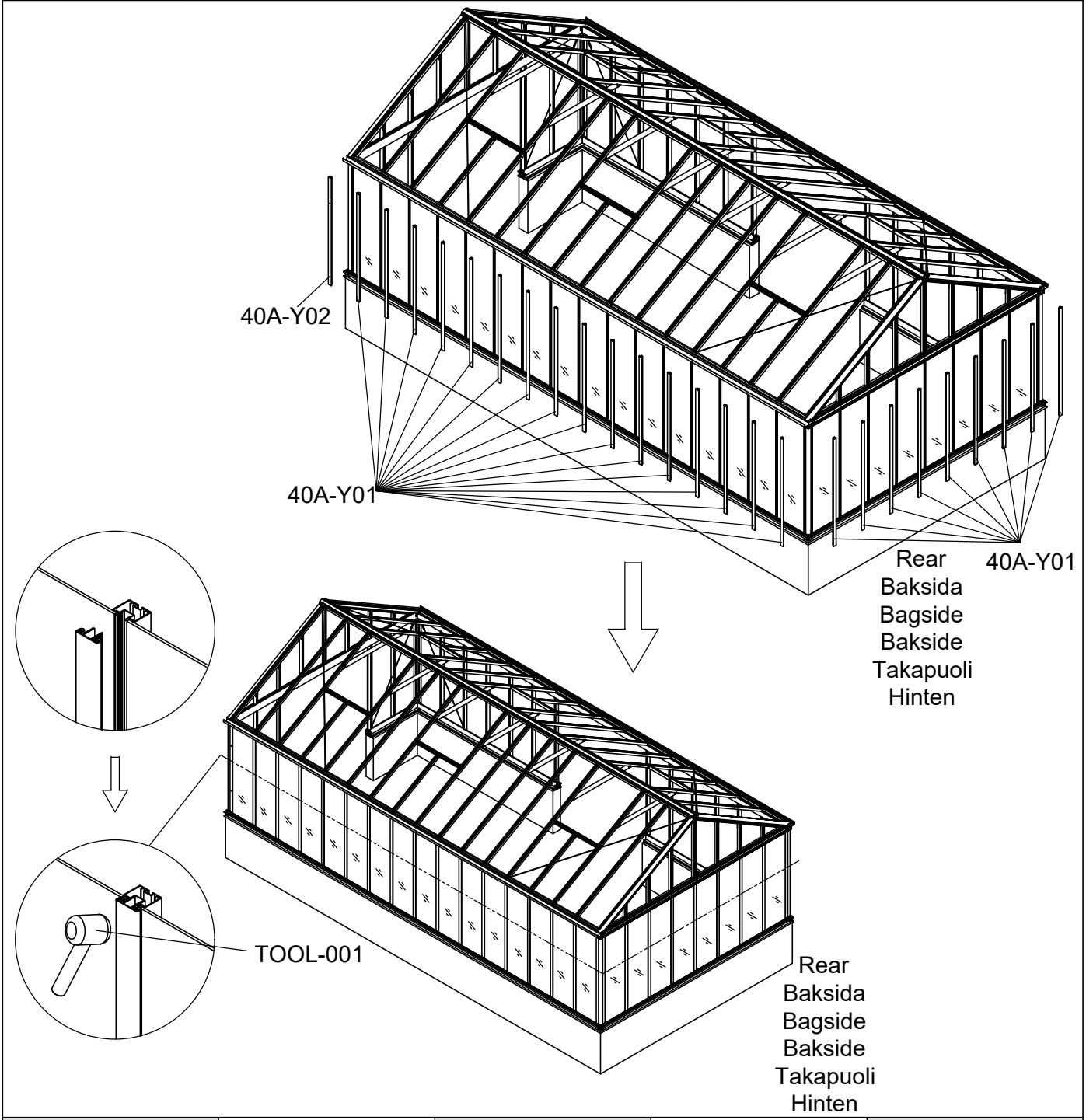

3051	3052	3053	3058	3059
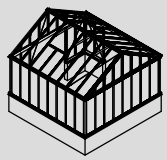	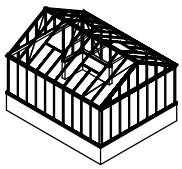	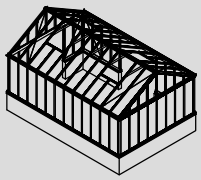	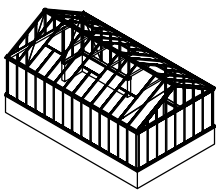	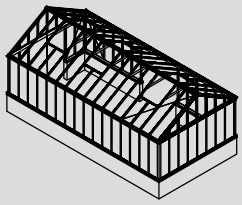

Part	NO.	QTY.					Length(MM)
		3051	3052	3053	3058	3059	
	7C26-007N	11.5M	13M	14.5M	16M	17.5M	

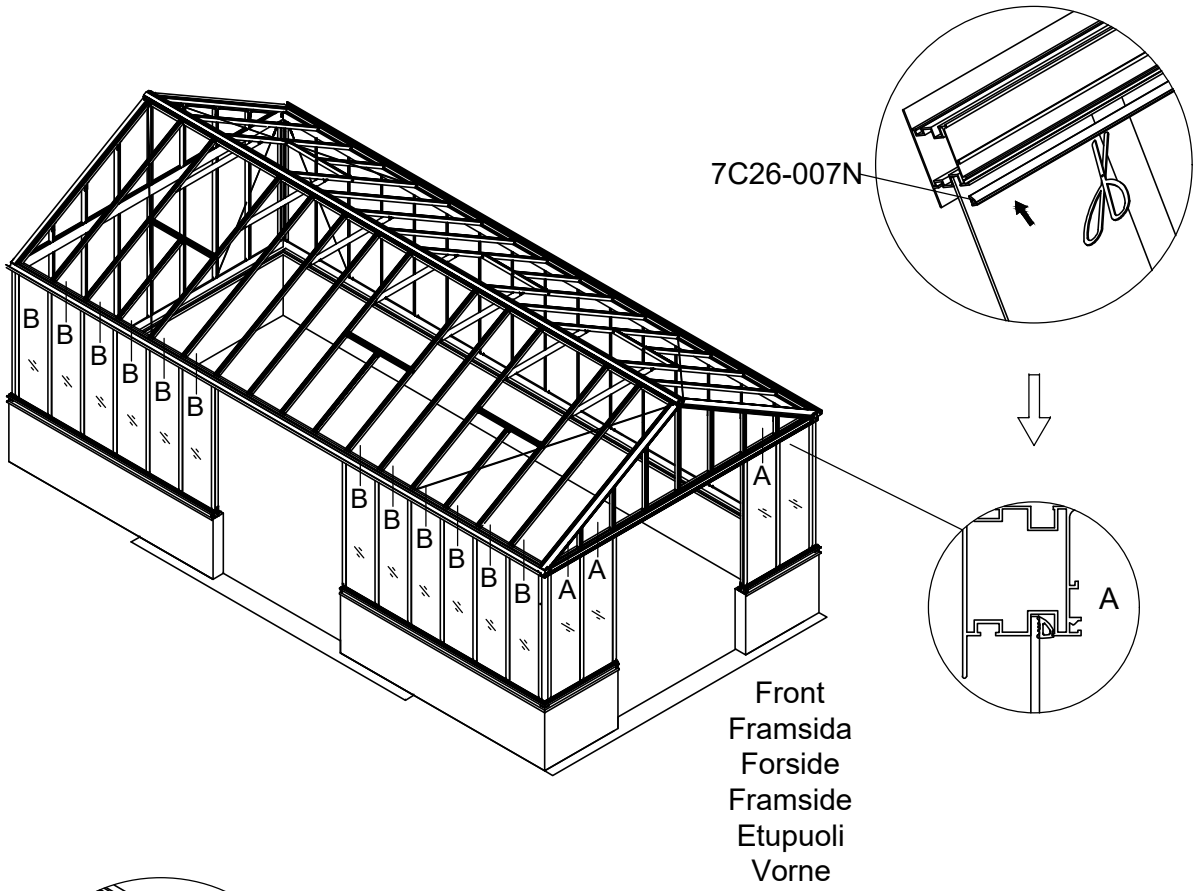

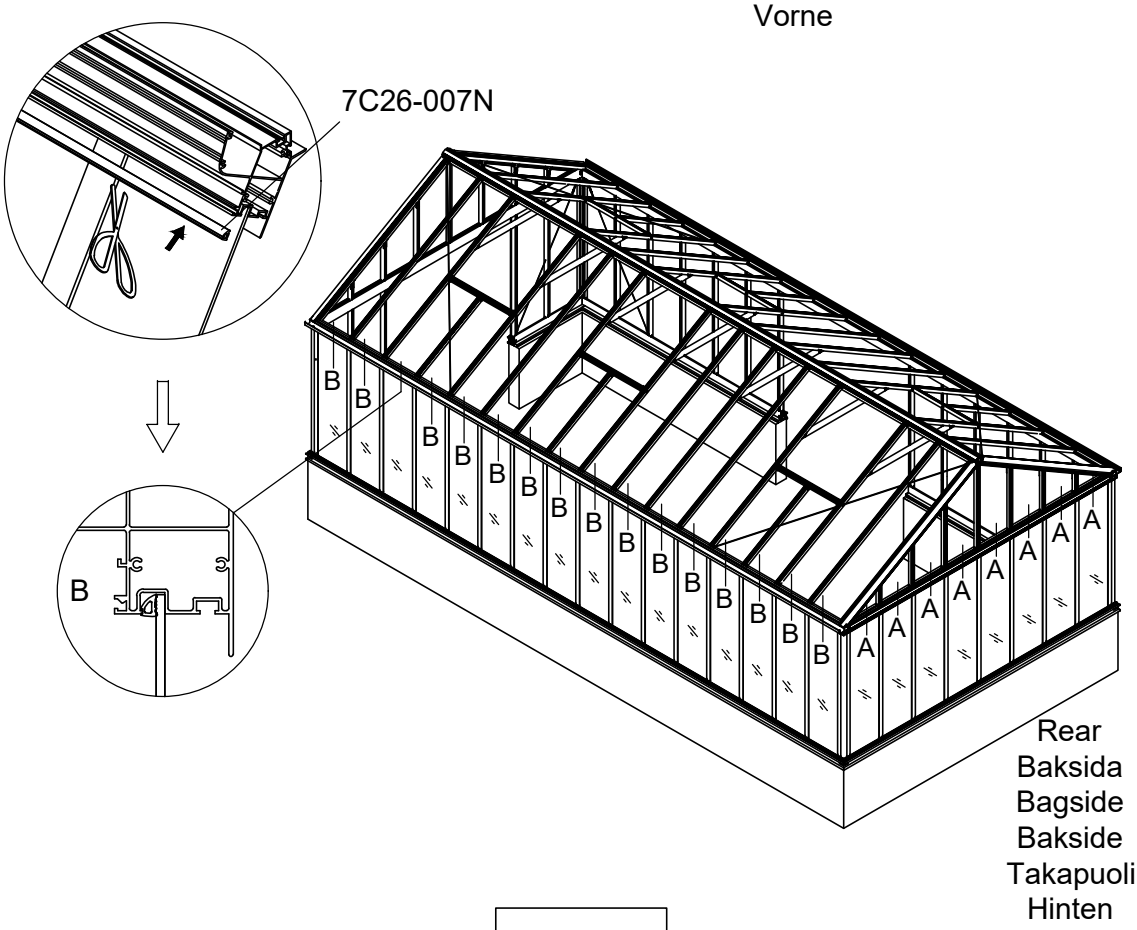

Part	NO.	QTY.	Length(MM)
	324×203	2	324
	354×420	2	420
	354×635	2	635
	354×852	2	852

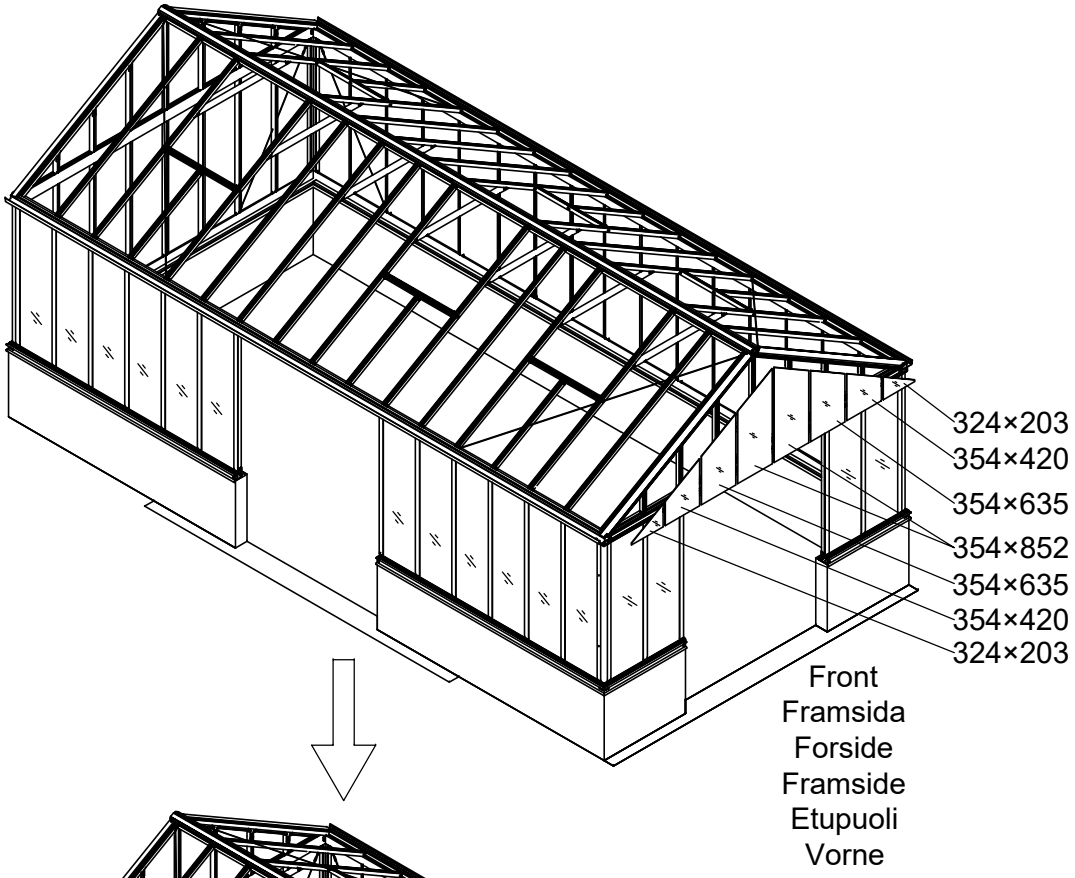

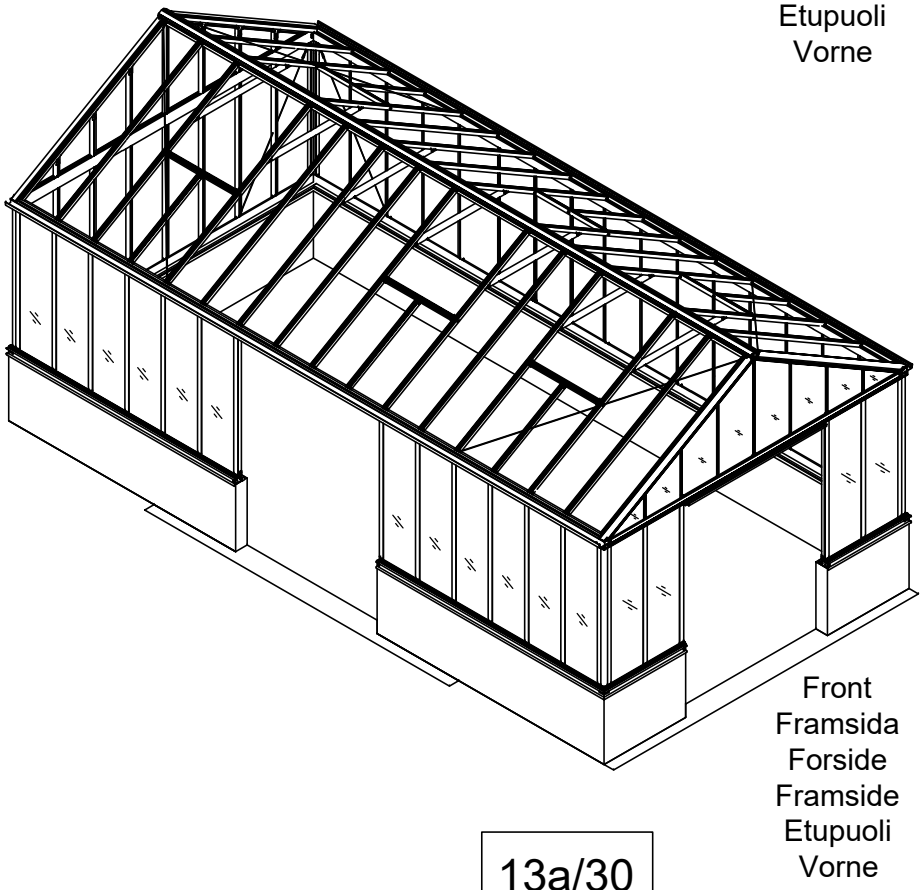

Part	NO.	QTY.	Length(MM)
	40X-Y03	1	859
	40X-Y04R	1	418
	40X-Y04L	1	418
	40X-Y05R	1	1715
	40X-Y05L	1	1715

Part	NO.	QTY.	Length(MM)	CTN NO.
	50X-Y04R	1	633	3140P-S
	50X-Y04L	1	633	3140P-S
	40X-Y04A-R	1	201	3140P-S
	40X-Y04A-L	1	201	3140P-S

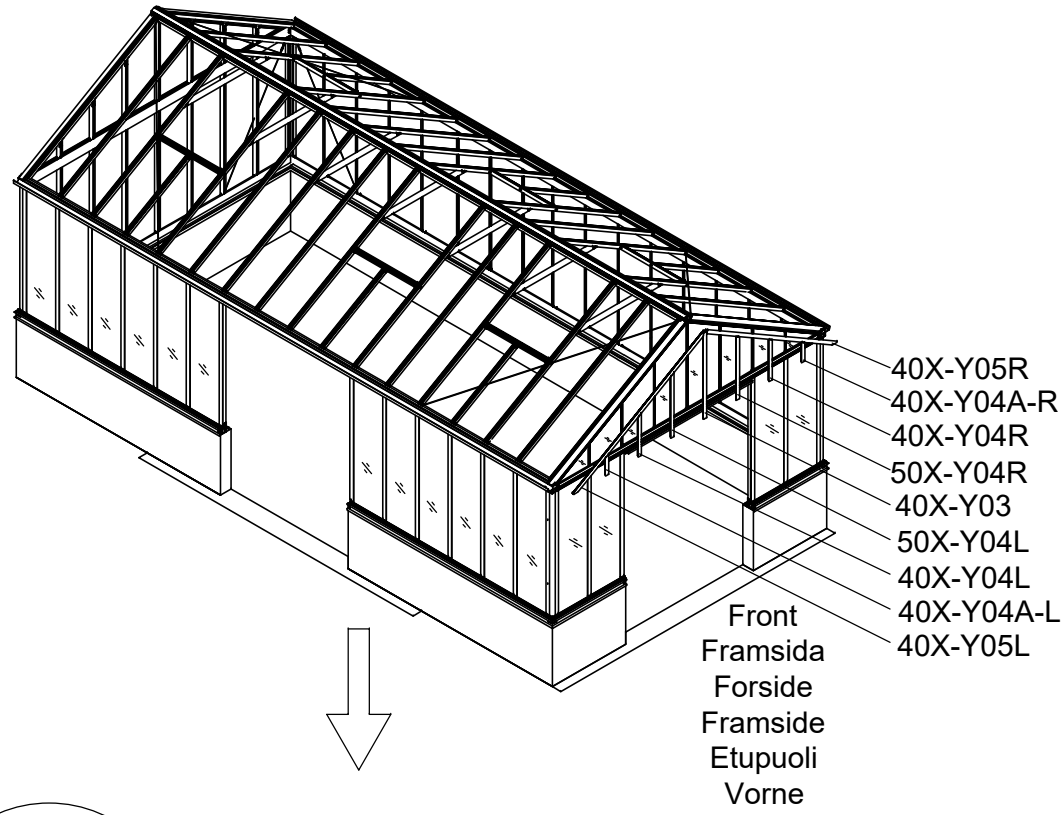

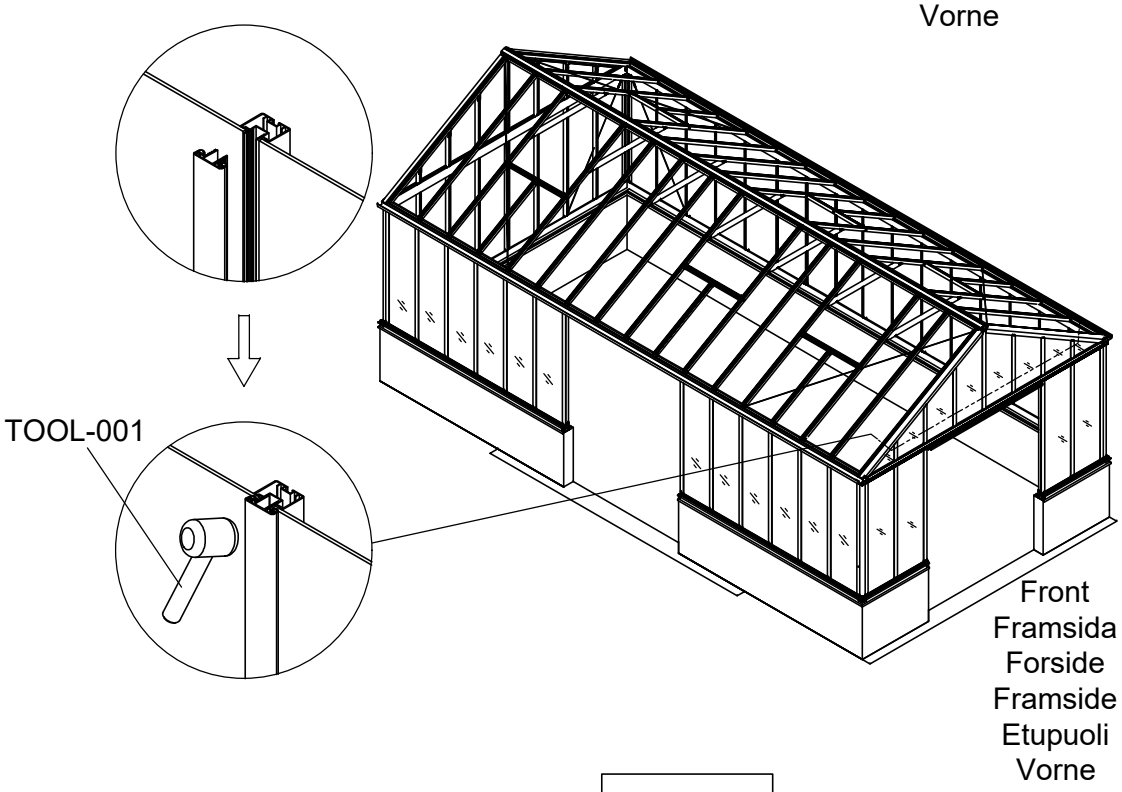

Part	NO.	QTY.	Length(MM)
	324×203	2	324
	354×420	2	420
	354×635	2	635
	354×852	2	852

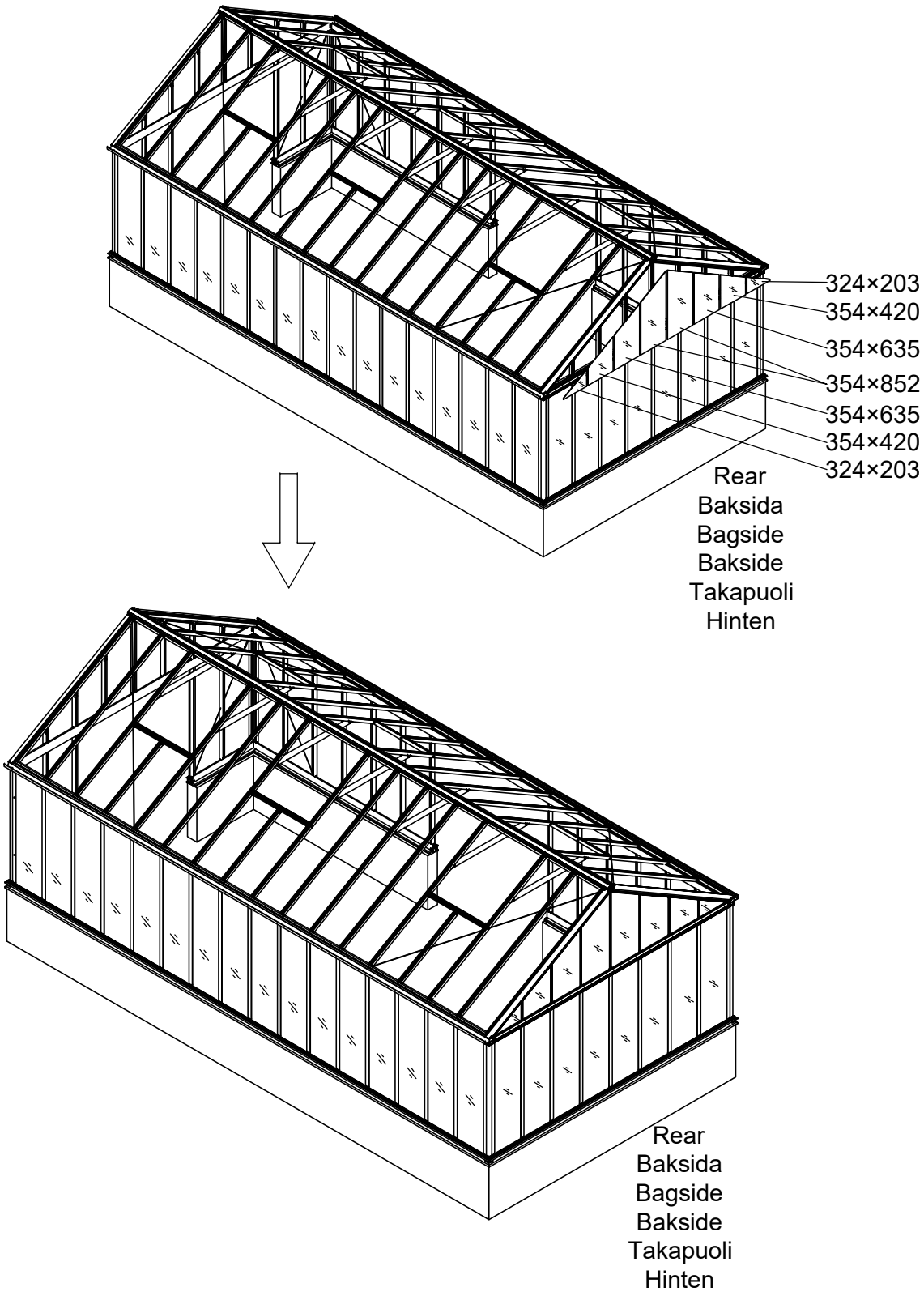

Part	NO.	QTY.	Length(MM)
	40X-Y03	1	859
	40X-Y04R	1	418
	40X-Y04L	1	418
	40X-Y05R	1	1715
	40X-Y05L	1	1715

Part	NO.	QTY.	Length(MM)	CTN NO.
	50X-Y04R	1	633	3140P-S
	50X-Y04L	1	633	3140P-S
	40X-Y04A-R	1	201	3140P-S
	40X-Y04A-L	1	201	3140P-S

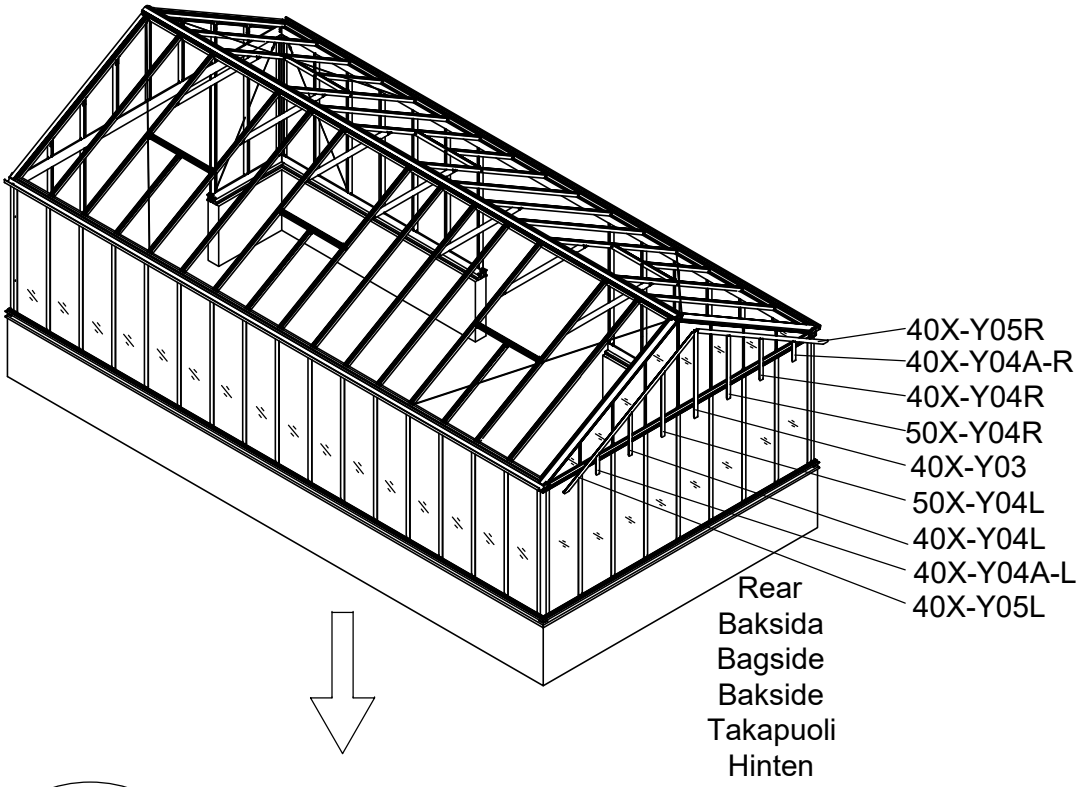

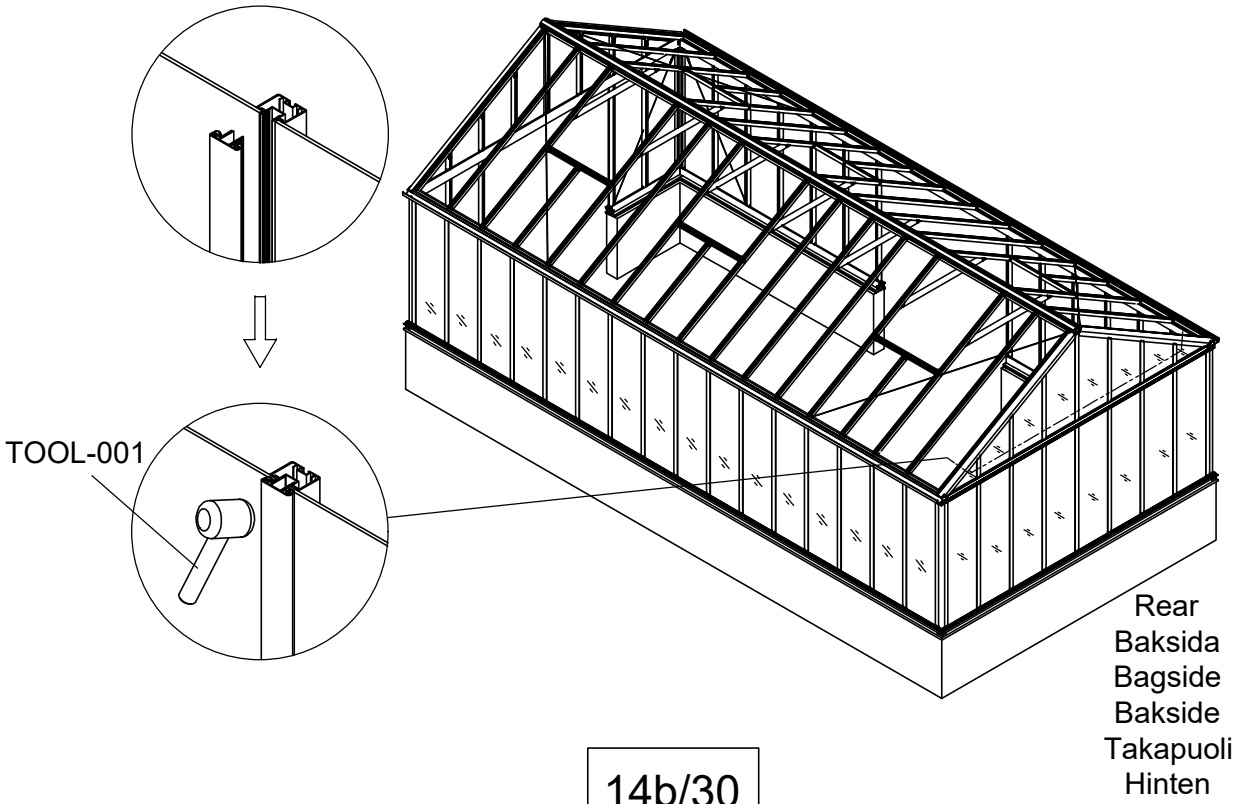

Part	NO.	QTY.					Length(MM)
		3051	3052	3053	3058	3059	
	354×1764	12	12	16	16	20	1764
	354×887	4	8	8	12	12	887

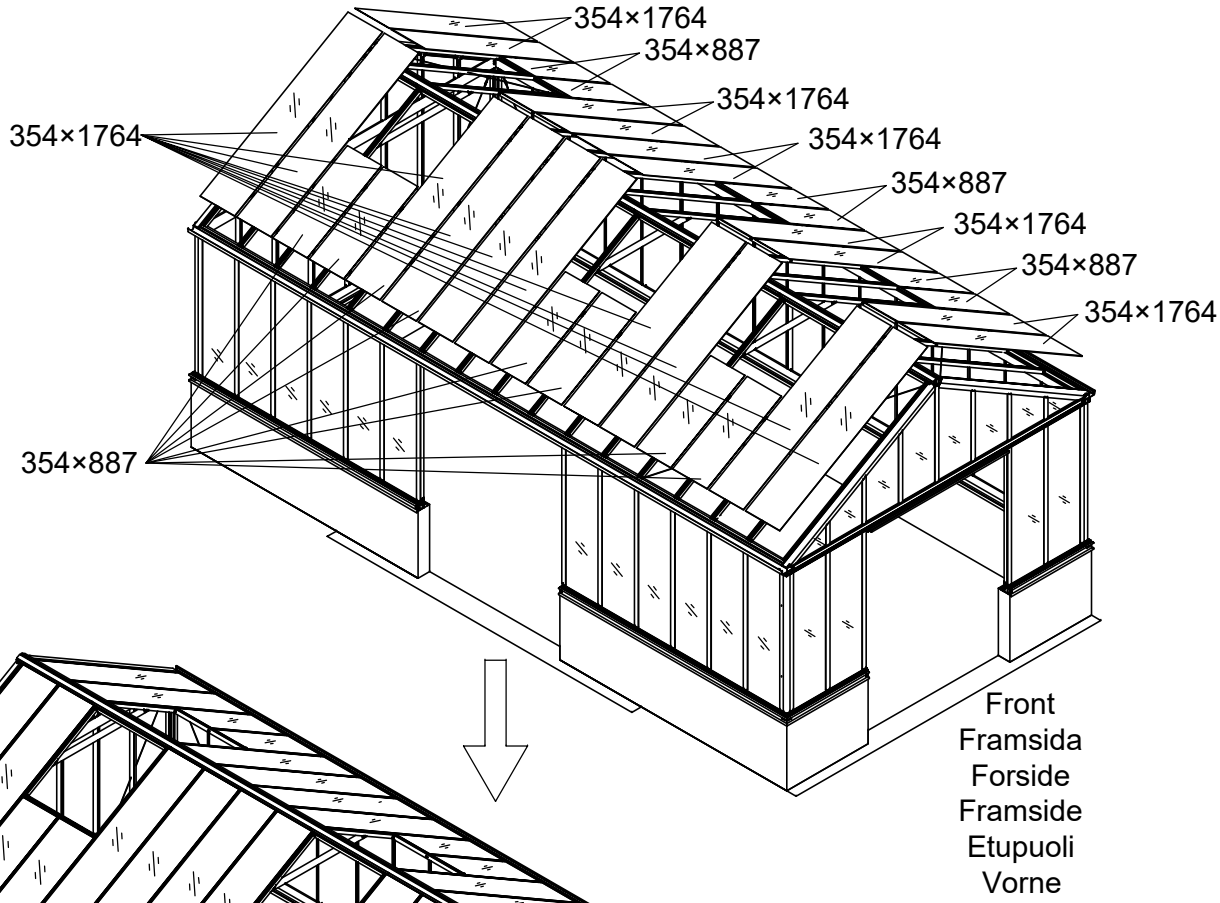

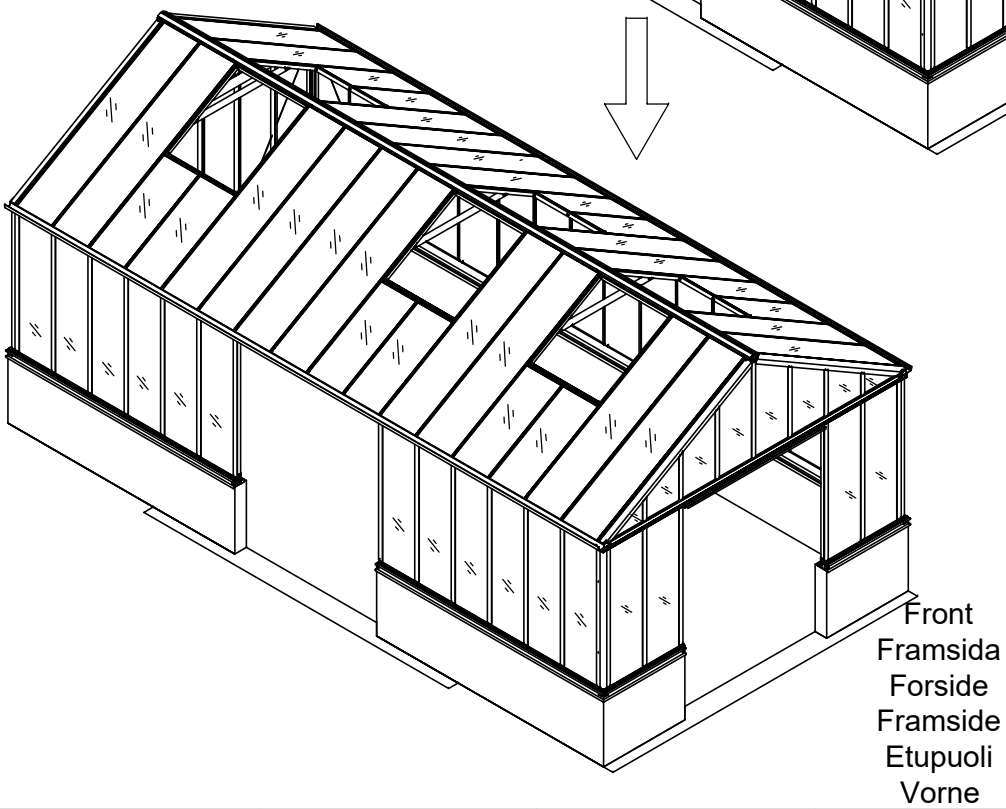

3051	3052	3053	3058	3059
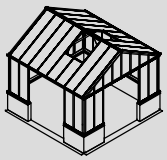	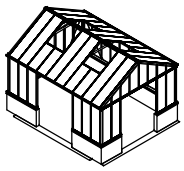	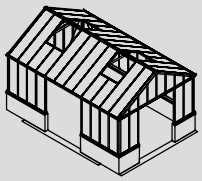	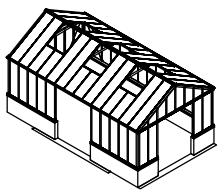	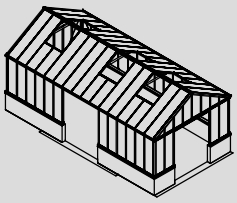

Part	NO.	QTY.															Length (MM)
		3051			3052			3053			3058			3059			
		3051	3140P-S	3140P-S-2	3052	3140P-S	3140P-S-2	3053	3140P-S	3140P-S-2	3058	3140P-S	3140P-S-2	3059	3140P-S	3140P-S-2	
	40X-Y06	10	6	0	12	6	0	14	6	2	16	6	2	18	6	4	1756
	40X-Y07	2	0	0	4	0	0	4	0	0	6	0	0	6	0	0	712
	40X-Y06A	0	2	0	0	2	2	0	2	2	0	2	4	0	2	4	878

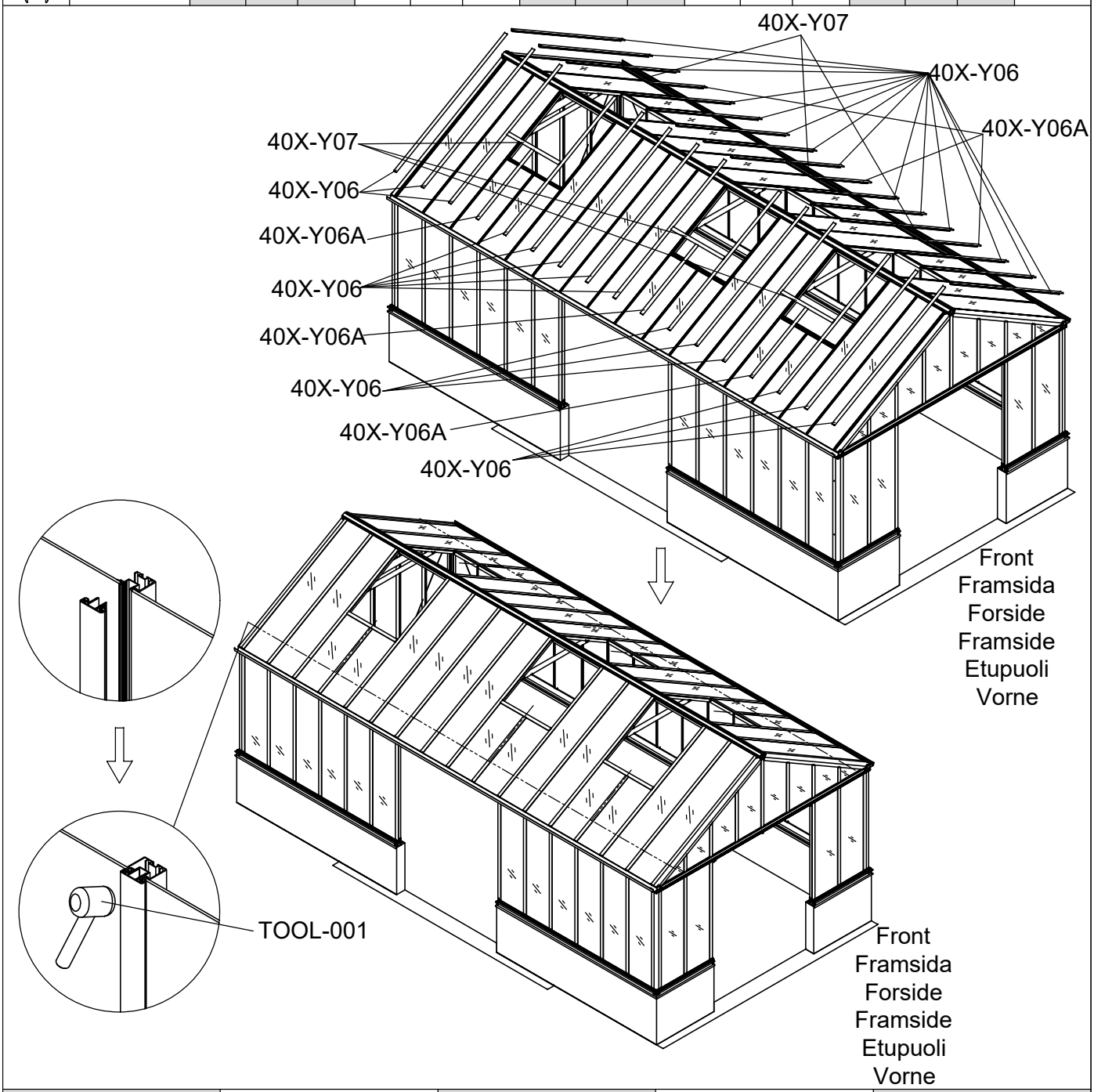

3051	3052	3053	3058	3059
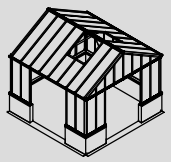	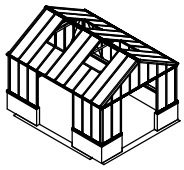	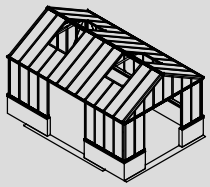	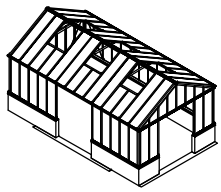	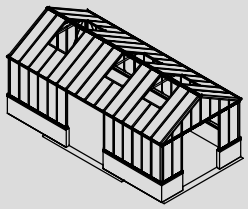

Part	NO.	QTY.					Length(MM)
		3051	3052	3053	3058	3059	
	7C26-009A	5M	5M	6.5M	6.5M	8M	
	7C26-007N	6M					

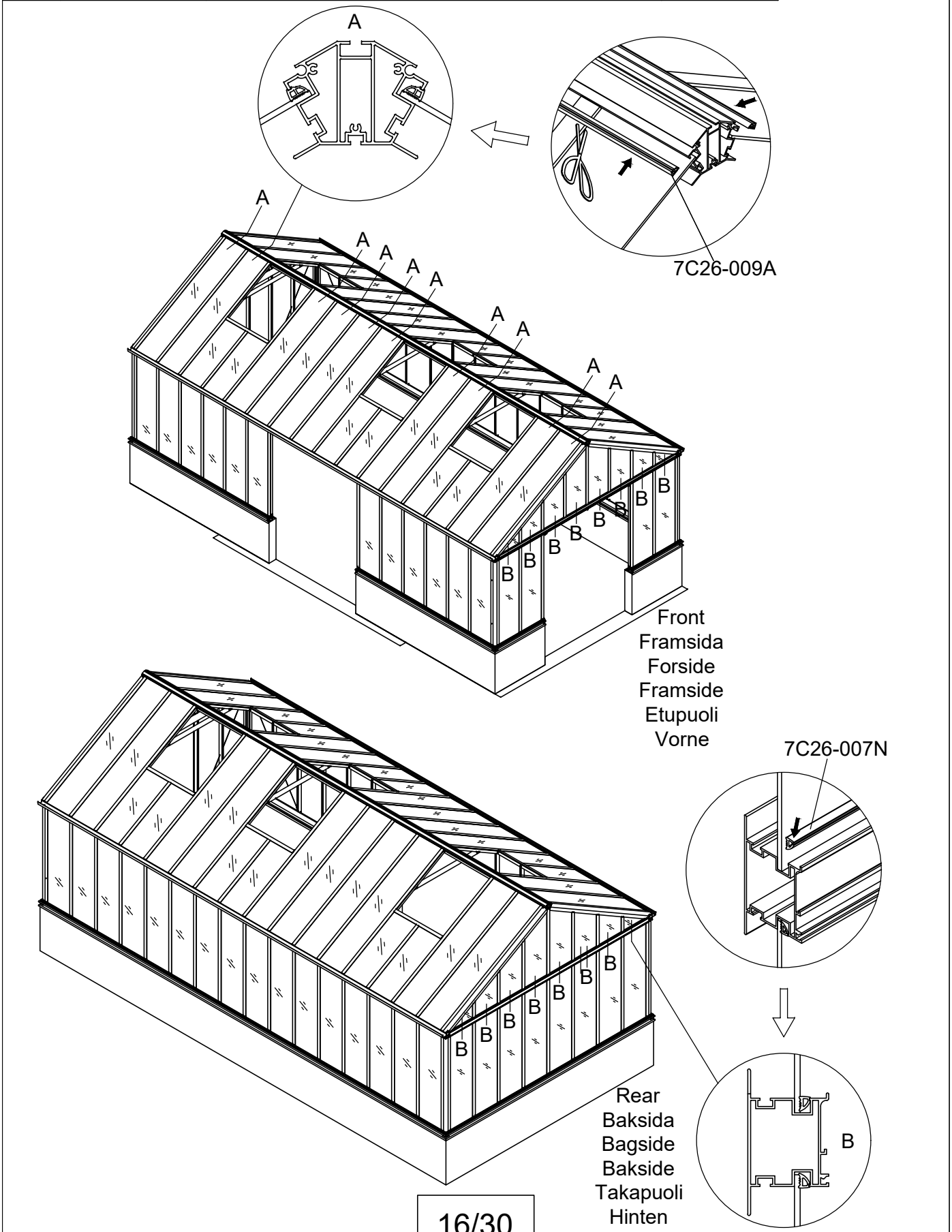

Part	Product	NO.	Length (MM)	QTY.	CTN NO.	Code
	3051	40X-Y62-4A	3883	1	3043P-S-BASE4	A007
	3052	40X-Y62-5A	3883	1	3043P-S-BASE5	
	3053	40X-Y62-6A	4634	1	3043P-S-BASE6	
	3058	40X-Y62-7A	5385	1	3043P-S-BASE7	
	3059	40X-Y62-8A	6136	1	3043P-S-BASE8	
	3052	40X-Y62-5B	430	2	3043PA-S-5	A014
	3053	40X-Y62-6B	806	2	3043PA-S-6	
	3058	40X-Y62-7B	1181	2	3043PA-S-7	
	3059	40X-Y62-8B	1557	2	3043PA-S-8	

Part	NO.	QTY.	Length(MM)	CTN NO.
	40X-Y60-AN	1	3023	3043PA-S-4G

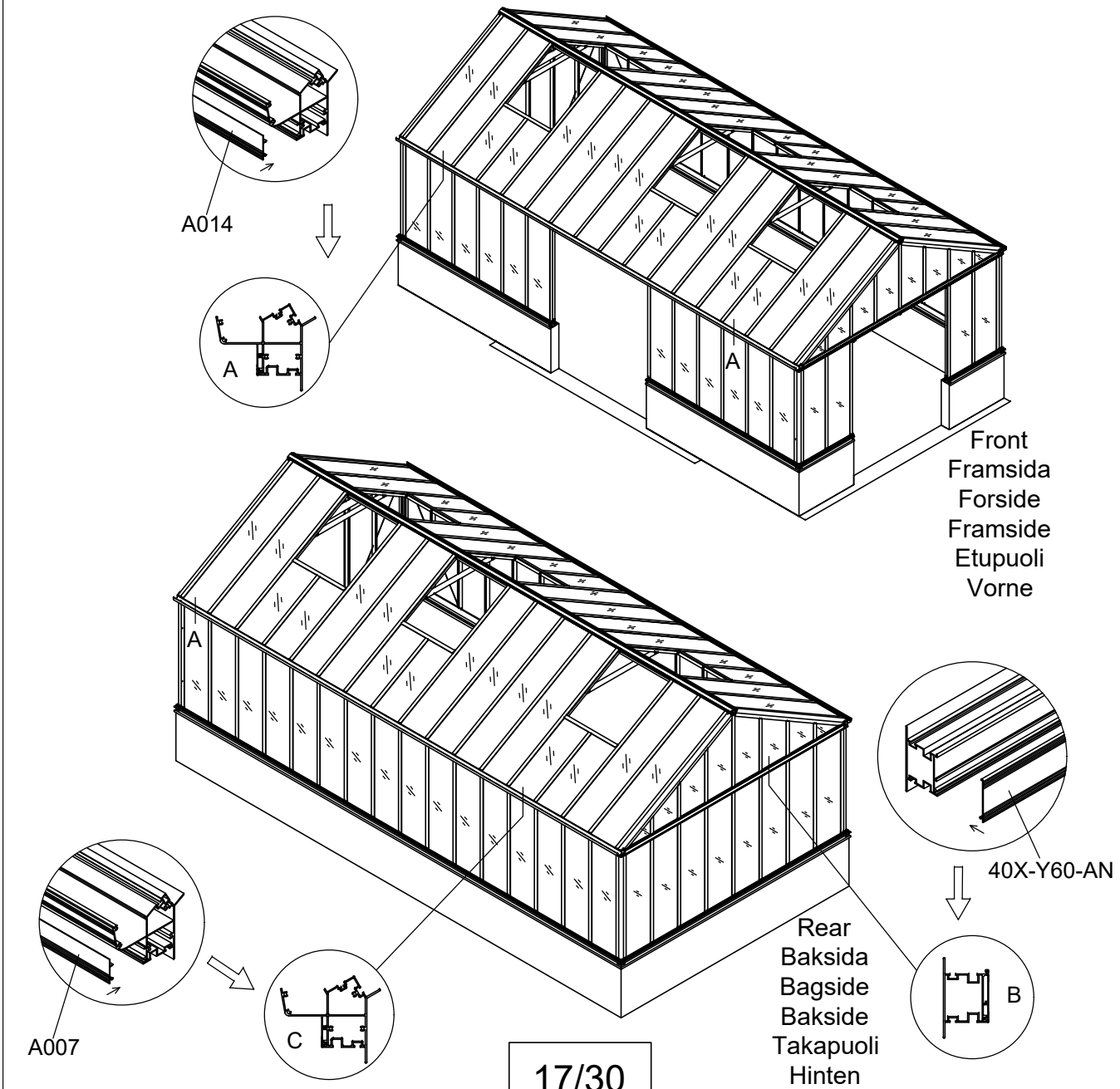

Part	NO.	QTY.	Length(MM)
	40A-Y90	2	1866
	40A-Y91R	1	1866
	40A-Y91L	1	1866
	40A-Y92R	1	769
	40A-Y92L	1	769
	40A-Y93	2	769
	W03	8	30
	W04	16	PCS

Part	NO.	QTY.	Length(MM)	CTN NO.
	40A-Y90	2	1866	3040P-D
	40A-Y91R	1	1866	3040P-D
	40A-Y91L	1	1866	3040P-D
	40A-Y92R	1	769	3040P-D
	40A-Y92L	1	769	3040P-D
	40A-Y93	2	769	3040P-D
	W03	8	30	3040P-D
	W04	16	PCS	3040P-D

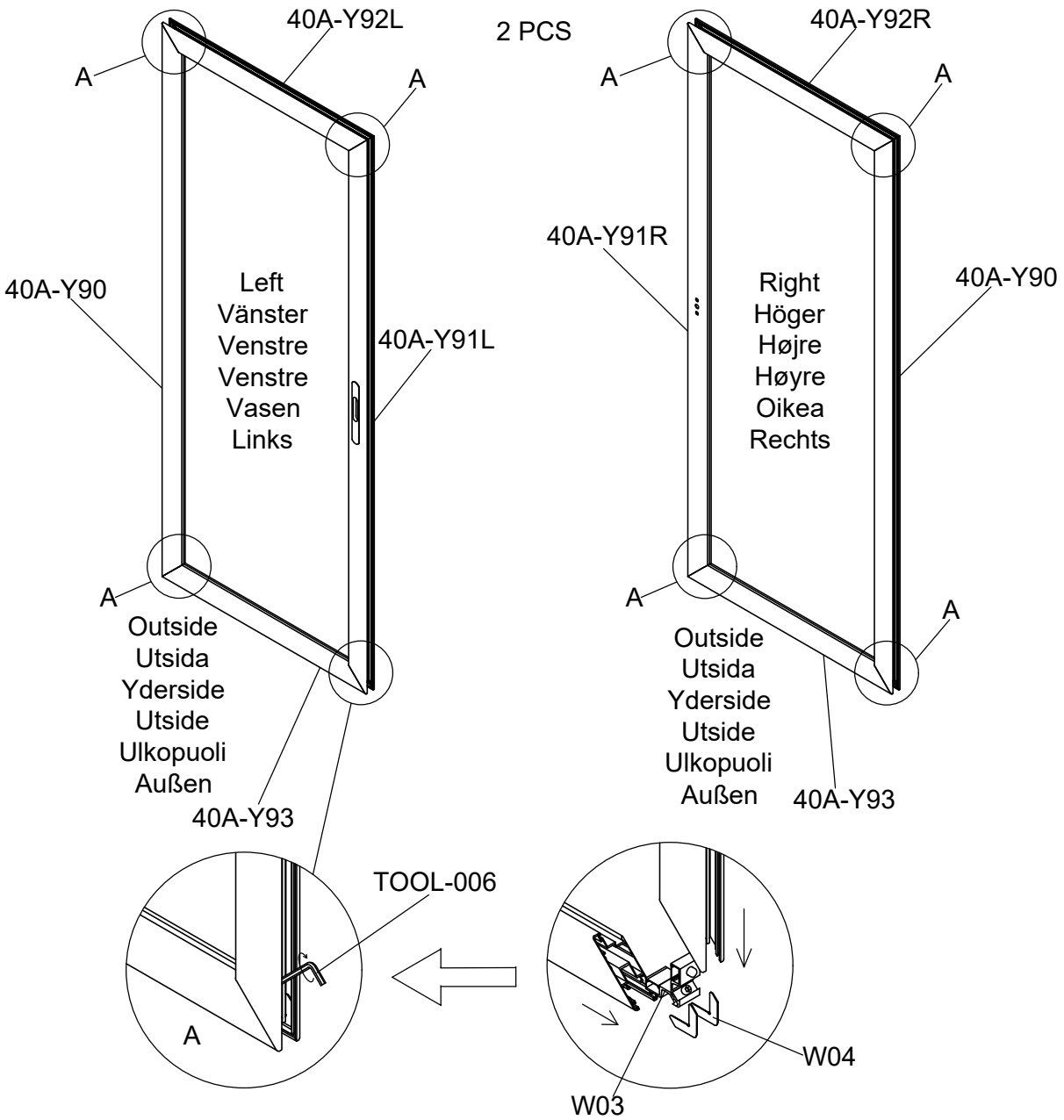

Part	NO.	QTY.	Length(MM)
	659×1756	2	1756
	40A-Y95	2	1765
	40A-Y96	2	668

Part	NO.	QTY.	Length(MM)	CTN NO.
	40A-Y95	2	1765	3040P-D
	40A-Y96	2	668	3040P-D

2 PCS

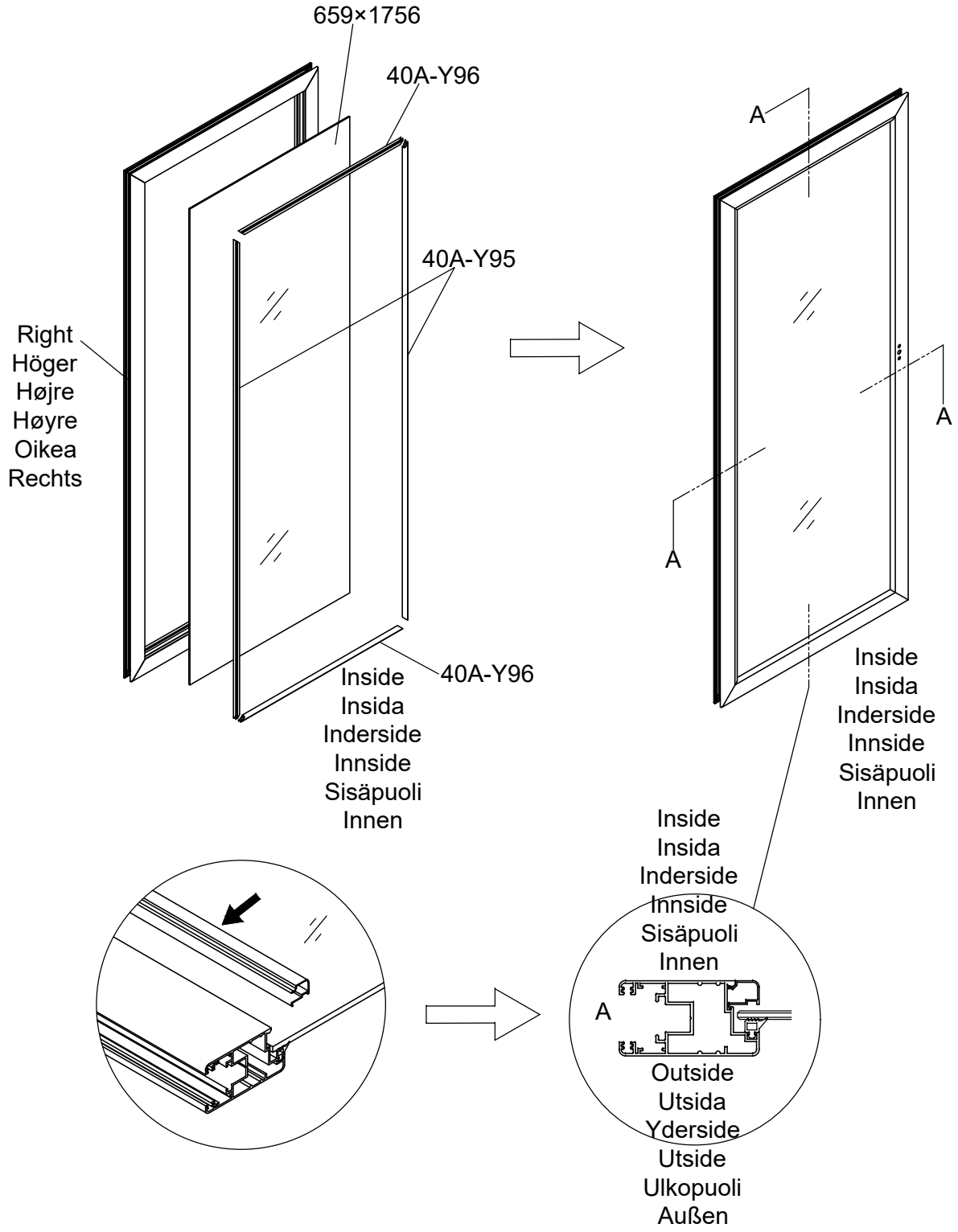

Part	NO.	QTY.	Length(MM)
	659×1756	2	1756
	40A-Y95	2	1765
	40A-Y96	2	668

Part	NO.	QTY.	Length(MM)	CTN NO.
	40A-Y95	2	1765	3040P-D
	40A-Y96	2	668	3040P-D

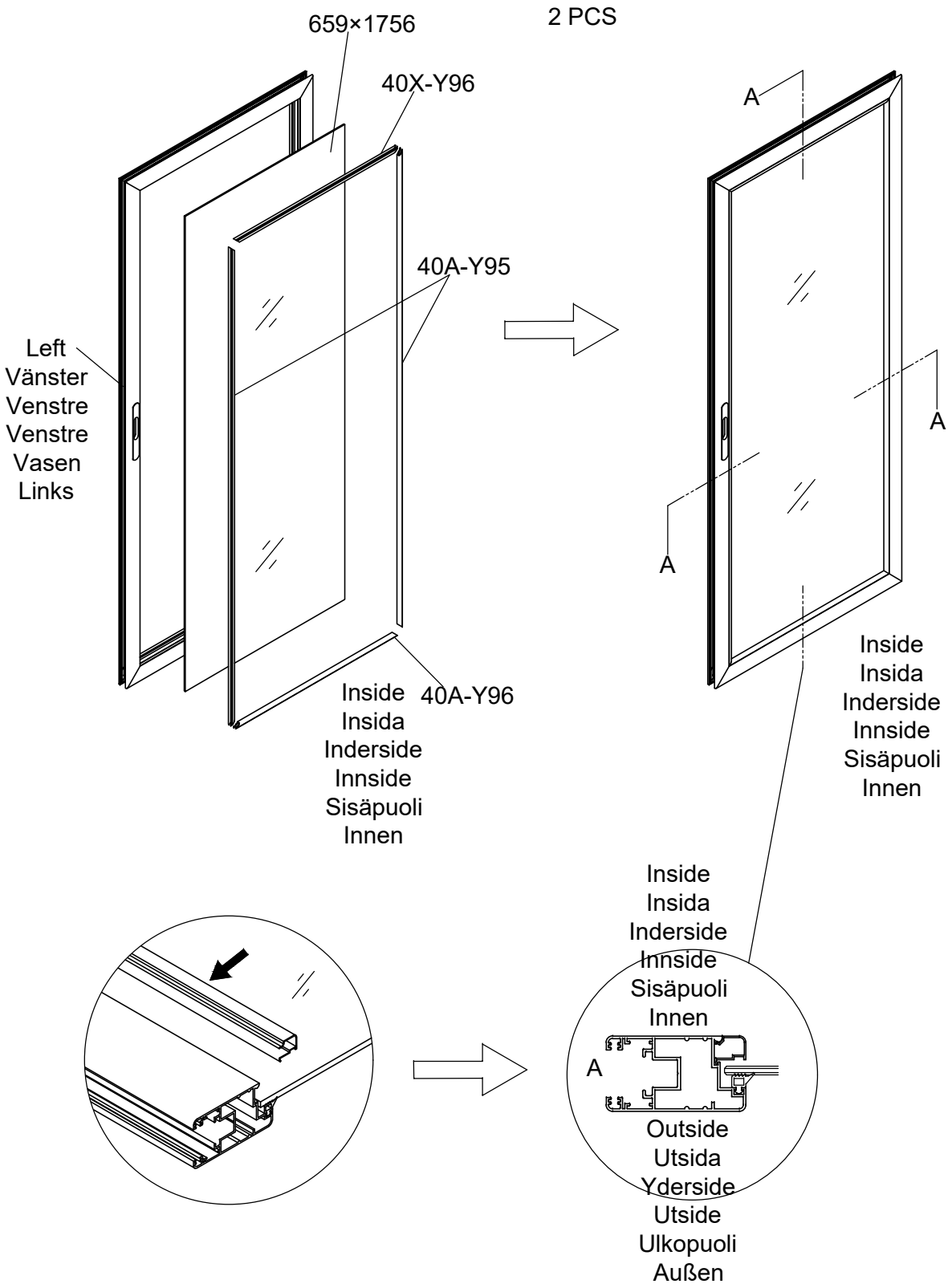

Part	NO.	QTY.	Length(MM)
	MCJT002	11M	

Part	NO.	QTY.	Length(MM)	CTN NO.
	MCJT002	11M		3040P-D

2 PCS

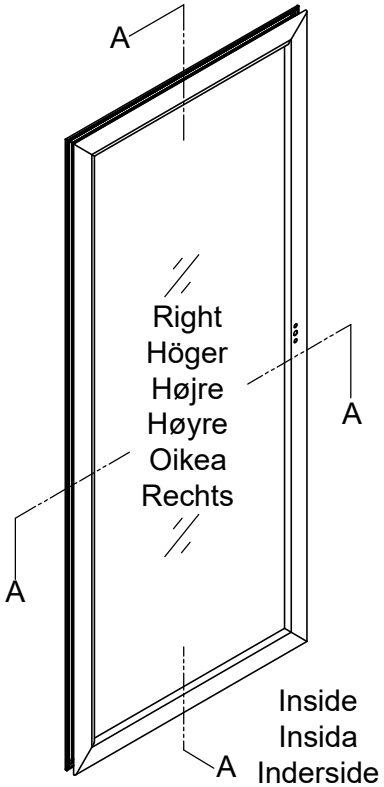

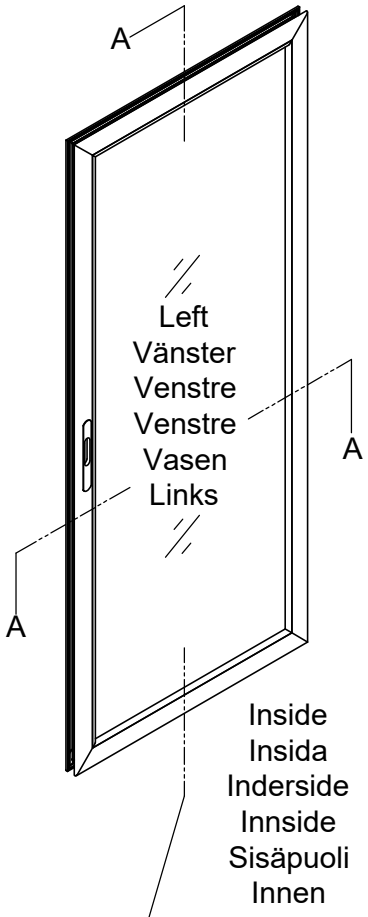

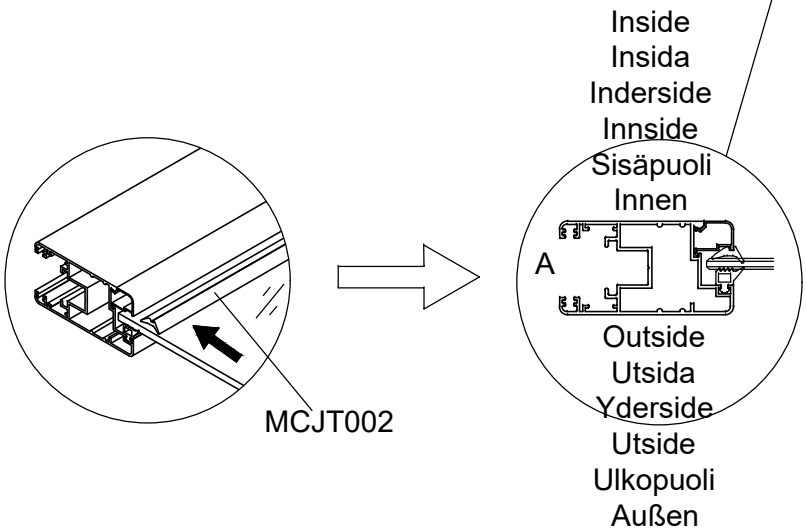

Part	NO.	QTY.	Length(MM)
	40A-Y97R	1	1860
	40A-Y97-A	1	1851
	Z4.2-13	4	PCS

Part	NO.	QTY.	Length(MM)	CTN NO.
	40A-Y97R	1	1860	3040P-D
	40A-Y97-A	1	1851	3040P-D
	Z4.2-13	4	PCS	3040P-D

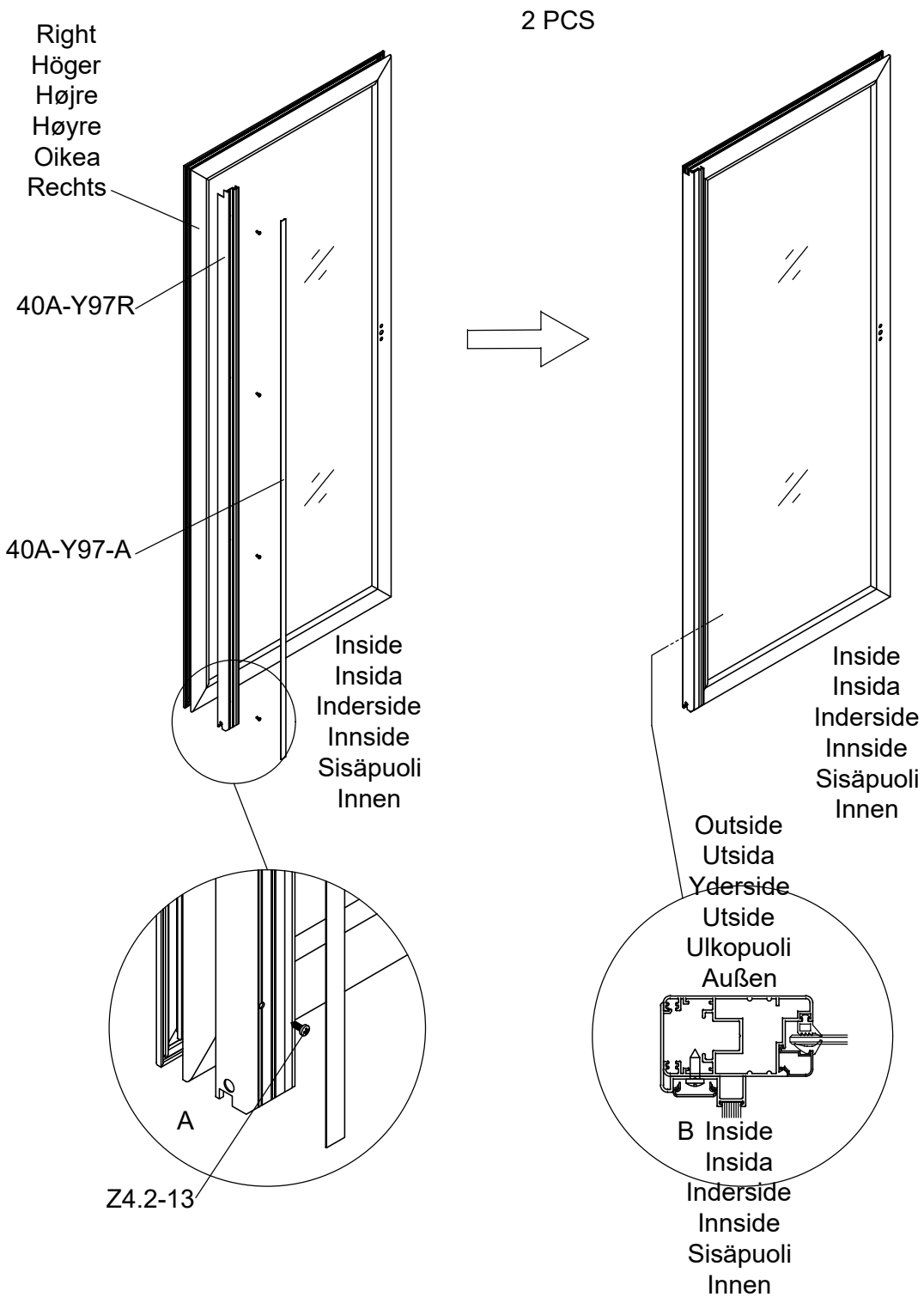

Part	NO.	QTY.	Length(MM)
	40A-Y97L	1	1860
	40A-Y97-A	1	1851
	Z4.2-13	4	PCS

Part	NO.	QTY.	Length(MM)	CTN NO.
	40A-Y97L	1	1860	3040P-D
	40A-Y97-A	1	1851	3040P-D
	Z4.2-13	4	PCS	3040P-D

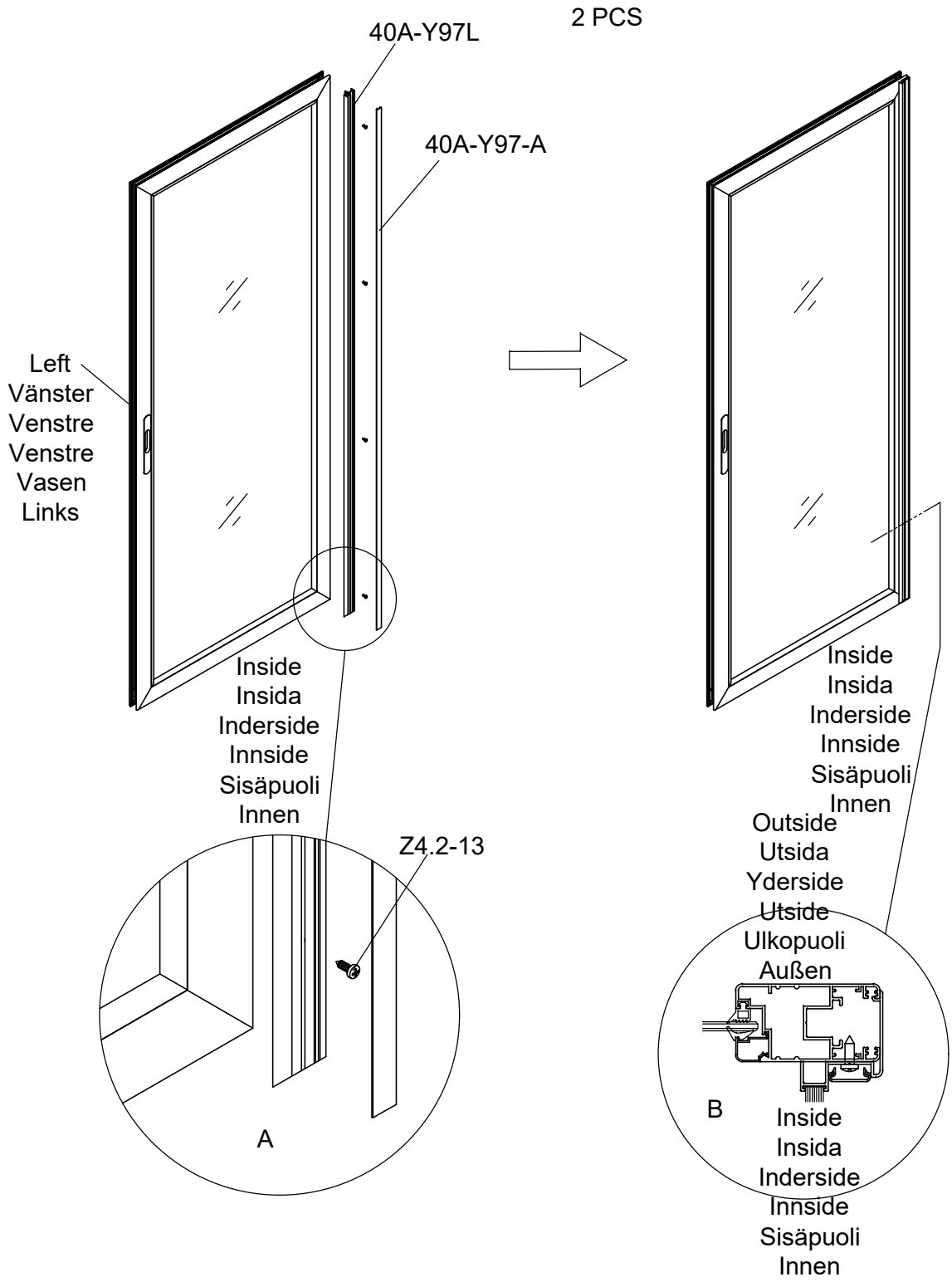

Part	NO.	QTY.	Length(MM)
	40A-Y94	1	1835
	NSST120	1.9M	
	T04	2	PCS
	Z4.2-38	3	PCS
	Z3.5-25	4	PCS

Part	NO.	QTY.	Length(MM)	CTN NO.
	40A-Y94	1	1835	3040P-D
	NSST120	1.9M		3040P-D
	T04	2	PCS	3040P-D
	Z4.2-38	3	PCS	3040P-D
	Z3.5-25	4	PCS	3040P-D

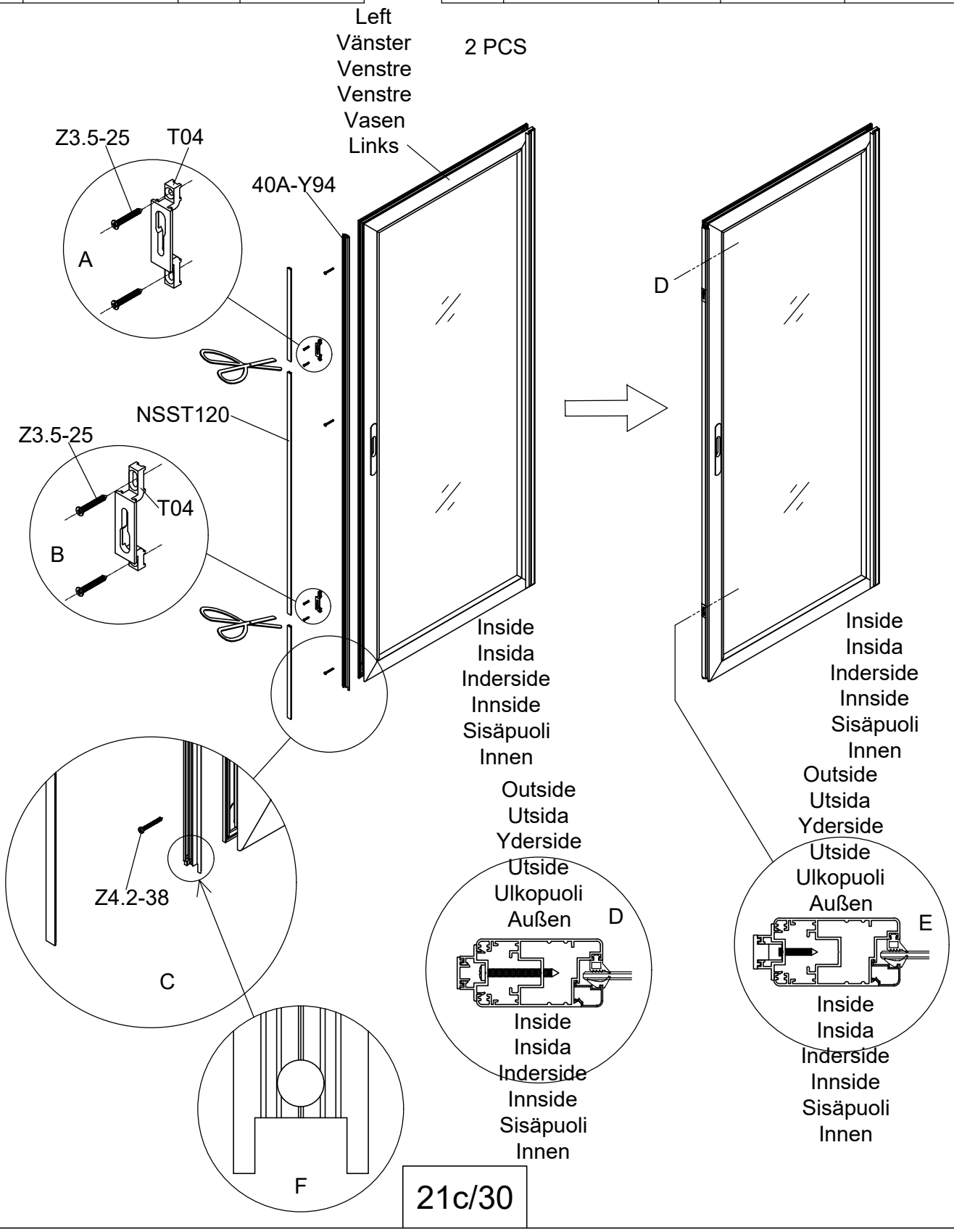

Part	NO.	QTY.	Length(MM)
	40A-Y98-R	1	1910
	40A-Y98-L	1	1910
	M6-35	2	PCS
	Si6-35	6	PCS
	J05	6	PCS

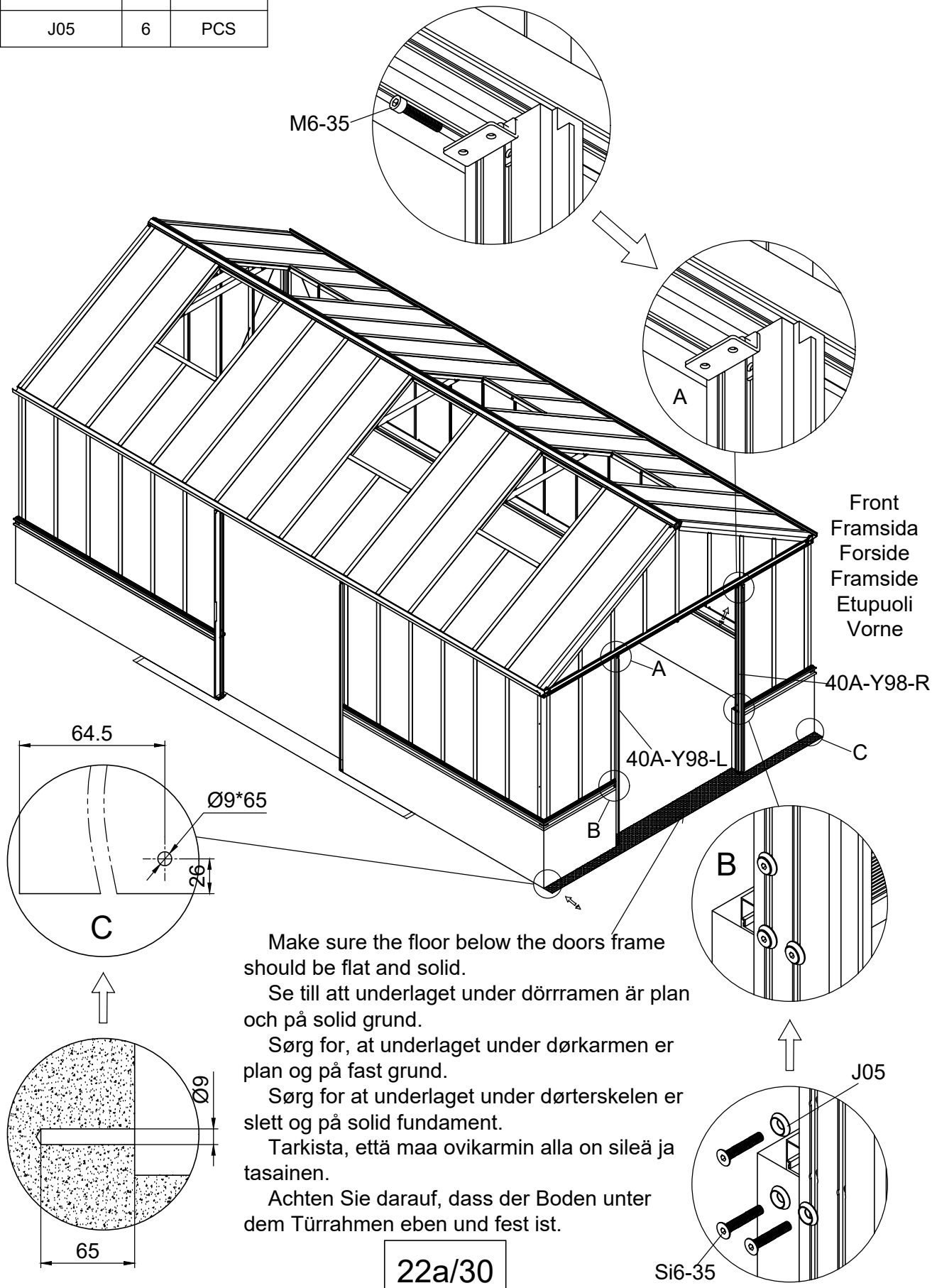

Make sure the floor below the doors frame should be flat and solid.

Se till att underlaget under dörrramen är plan och på solid grund.

Sørg for, at underlaget under dørkarmen er plan og på fast grund.

Sørg for at underlaget under dørterskelen er slett og på solid fundament.

Tarkista, että maa ovikarmin alla on sileä ja tasainen.

Achten Sie darauf, dass der Boden unter dem Türrahmen eben und fest ist.

Part	NO.	QTY.	Length(MM)	CTN NO.
	40A-Y98-R	1	1910	3040P-D
	40A-Y98-L	1	1910	3040P-D
	M6-35	2	PCS	3040P-D
	Si6-35	6	PCS	3040P-D
	J05	6	PCS	3040P-D

Code	Length(MM)				
	3051	3052	3053	3058	3059
L3	64.5	440	815.5	1191	1566.5

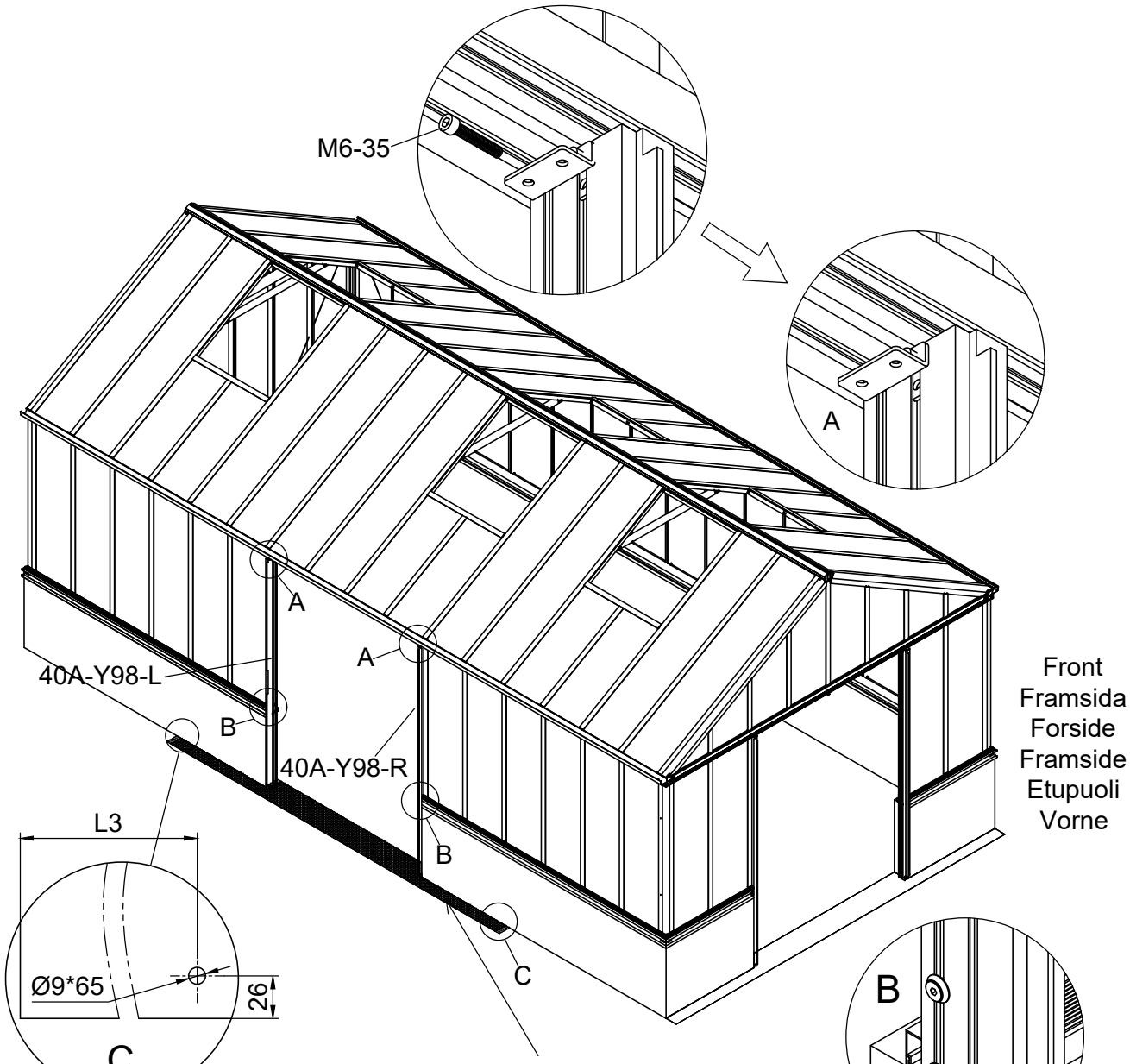

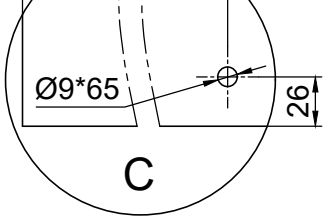

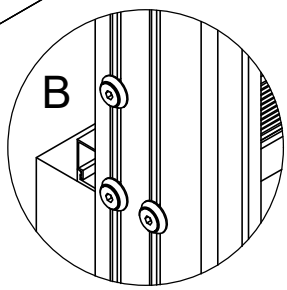

Make sure the floor below the doors frame should be flat and solid.

Se till att underlaget under dörrramen är plan och på solid grund.

Sørg for, at underlaget under dørkarmen er plan og på fast grund.

Sørg for at underlaget under dørterskelen er slett og på solid fundament.

Tarkista, että maa ovikarmin alla on sileä ja tasainen.

Achten Sie darauf, dass der Boden unter dem Türrahmen eben und fest ist.

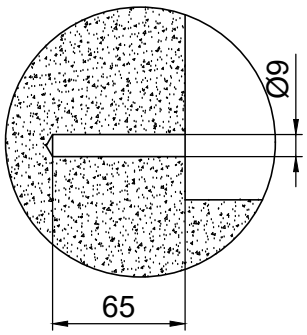

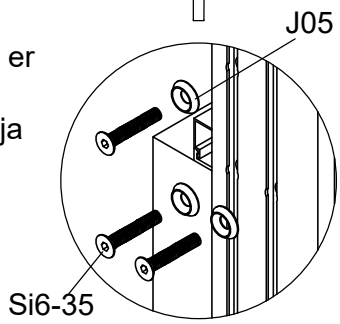

Part	NO.	QTY.	Length(MM)
	40A-Y99	1	1424
	40A-Y100	1	1424
	Si6-16	10	PCS
	J05	10	PCS
	PS6-60	2	PCS

Part	NO.	QTY.	Length(MM)	CTN NO.
	40A-Y99	1	1424	3040P-D
	40A-Y100	1	1424	3040P-D
	Si6-16	10	PCS	3040P-D
	J05	10	PCS	3040P-D
	PS6-60	2	PCS	3040P-D

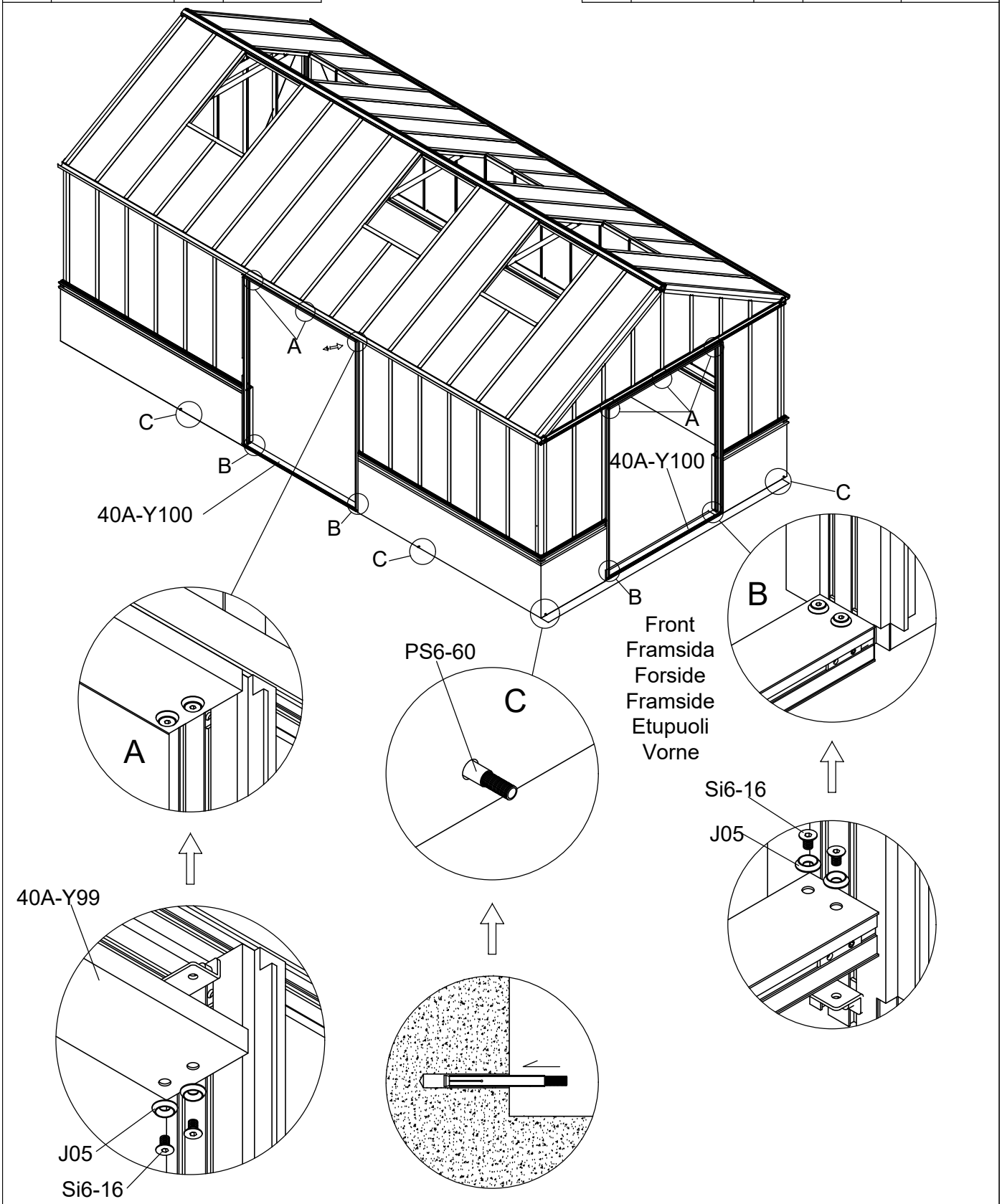

Part	NO.	QTY.	Length(MM)
	40A-Y64	1	3016
	40A-Y17N	1	3110
	7C28-004	5	PCS
	Z4.2-50	5	PCS
	Si6-25	3	PCS
	J05	3	PCS
	7C26-031	2	PCS

Part	NO.	QTY.	Length(MM)	CTN NO.
	40A-Y64	1	3016	3040P-D
	40A-Y17N	1	3110	3040P-D
	7C28-004	5	PCS	3040P-D
	Z4.2-50	5	PCS	3040P-D
	Si6-25	3	PCS	3040P-D
	J05	3	PCS	3040P-D
	7C26-031	2	PCS	3040P-D

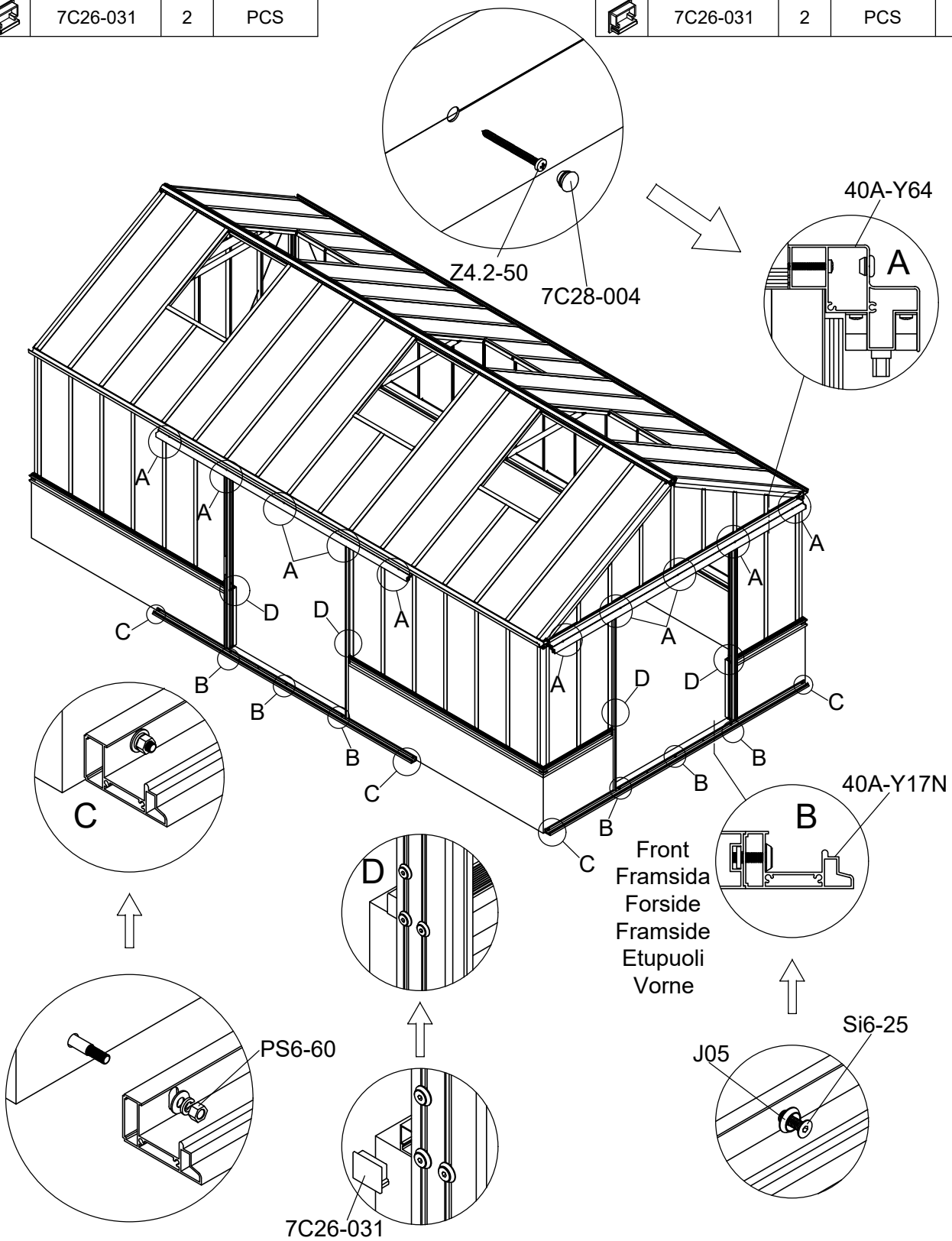

Part	NO.	QTY.	Length(MM)
	40A-Y98A-R	1	1855
	40A-Y98A-L	1	1855

Part	NO.	QTY.	Length(MM)	CTN NO.
	40A-Y98A-R	1	1855	3040P-D
	40A-Y98A-L	1	1855	3040P-D

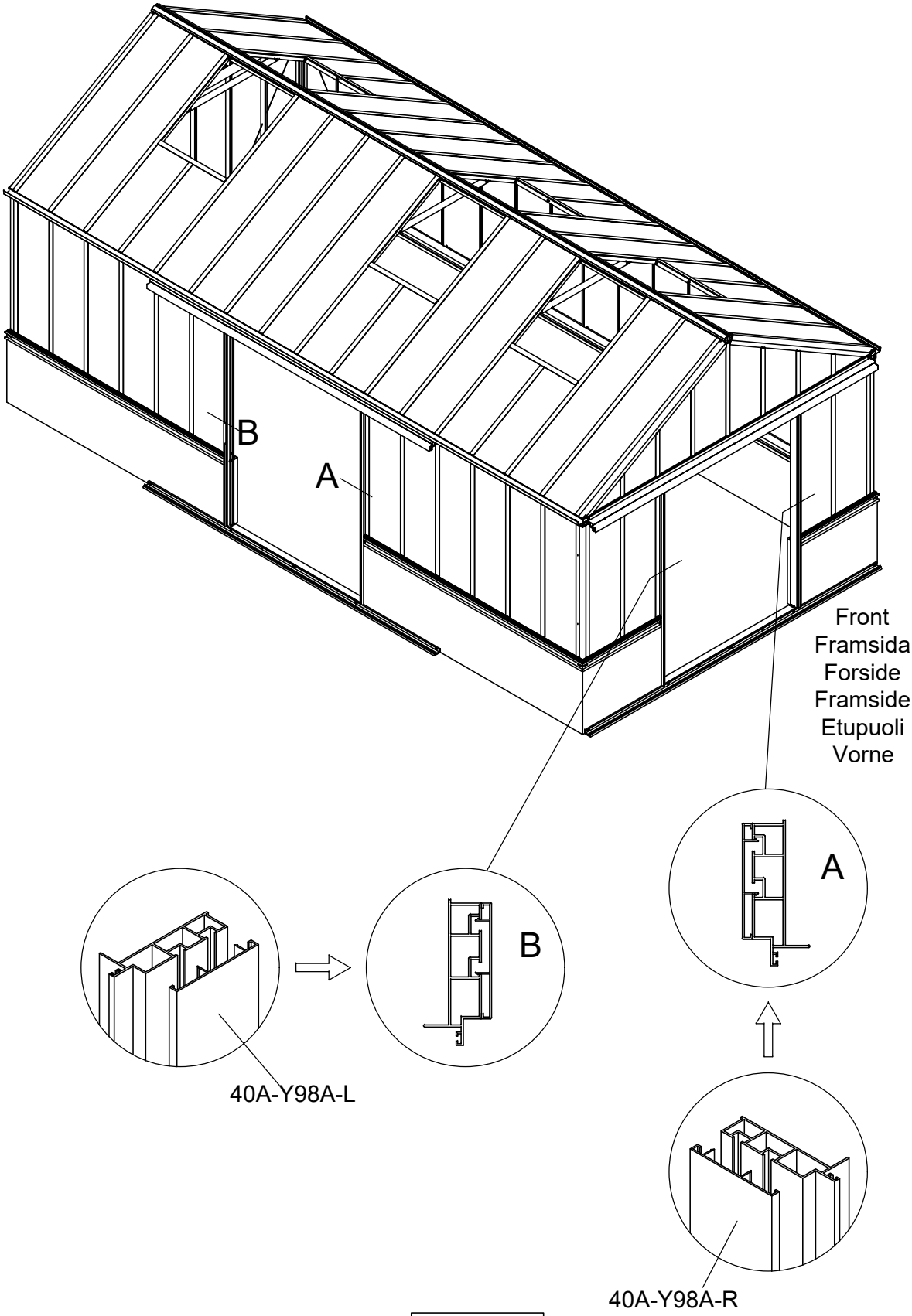

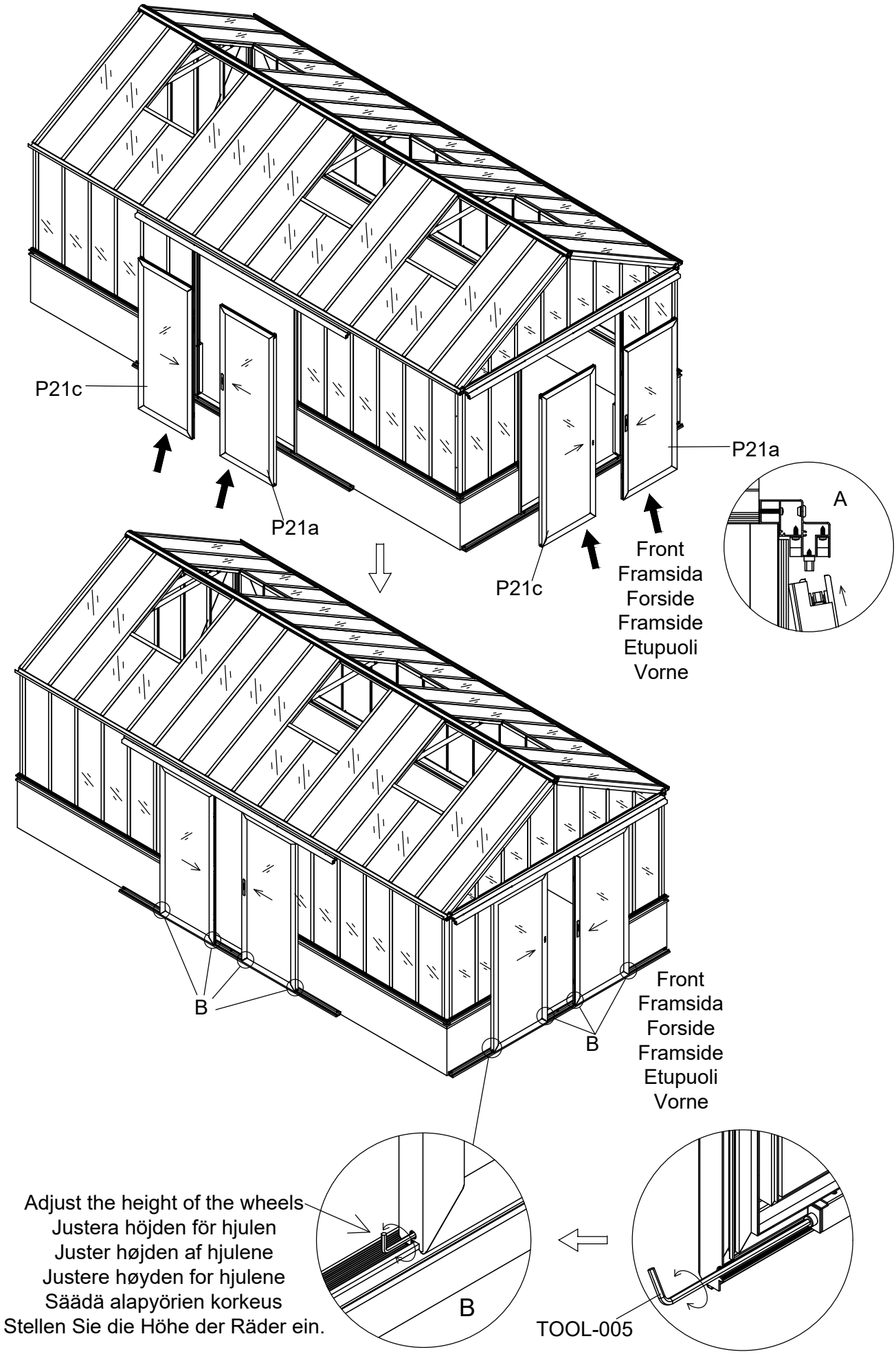
P21c
P21a
P21a
P21c
Front
Framsida
Forside
Framside
Etupuoli
Vorne
A
B
B
Front
Framsida
Forside
Framside
Etupuoli
Vorne
Adjust the height of the wheels
Justera höjden för hjulen
Juster højden af hjulene
Justere høyden for hjulene
Säädä alapyörien korkeus
Stellen Sie die Höhe der Räder ein.
B
TOOL-005

Part	NO.	QTY.	Length(MM)
	T01N	1	PCS
	T01A	1	PCS
	J02	2	PCS
	7B26-039	2	PCS
	7B26-038	2	PCS
	M4-40	2	PCS
	Mi4-17	2	PCS
	Z3.5-25	4	PCS
	Z4.2-13	8	PCS

Part	NO.	QTY.	Length(MM)	CTN NO.
	T01N	1	PCS	3040P-D
	T01A	1	PCS	3040P-D
	J02	2	PCS	3040P-D
	7B26-039	2	PCS	3040P-D
	7B26-038	2	PCS	3040P-D
	M4-40	2	PCS	3040P-D
	Mi4-17	2	PCS	3040P-D
	Z3.5-25	4	PCS	3040P-D
	Z4.2-13	8	PCS	3040P-D

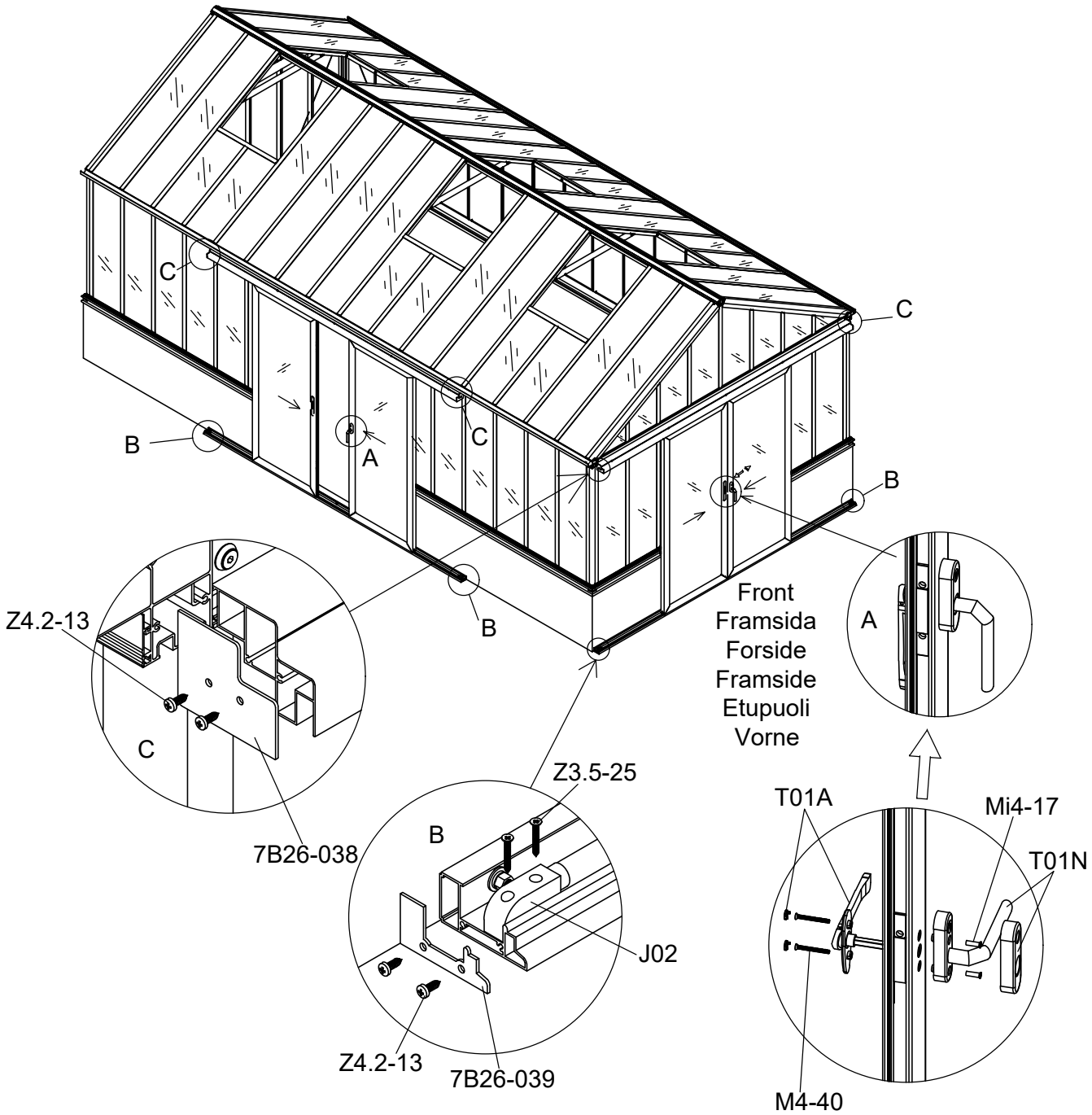

Part	NO.	QTY.					Length(MM)	CTN NO.
		3051	3052	3053	3058	3059		
	40X-Y80E-A	2	4	4	6	6	801	
	40X-Y81E	4	8	8	12	12	882	
	W06	8	16	16	24	24	46	
	W04	8	16	16	24	24	PCS	
	782×863	2	4	4	6	6	863	
	MCJT002	4	8	8	12	12	12	
	40X-Y82E-A	2	2	2	2	2	801	3149P-S
	40X-Y82E-A	0	2	2	4	4	801	3149P-S-2

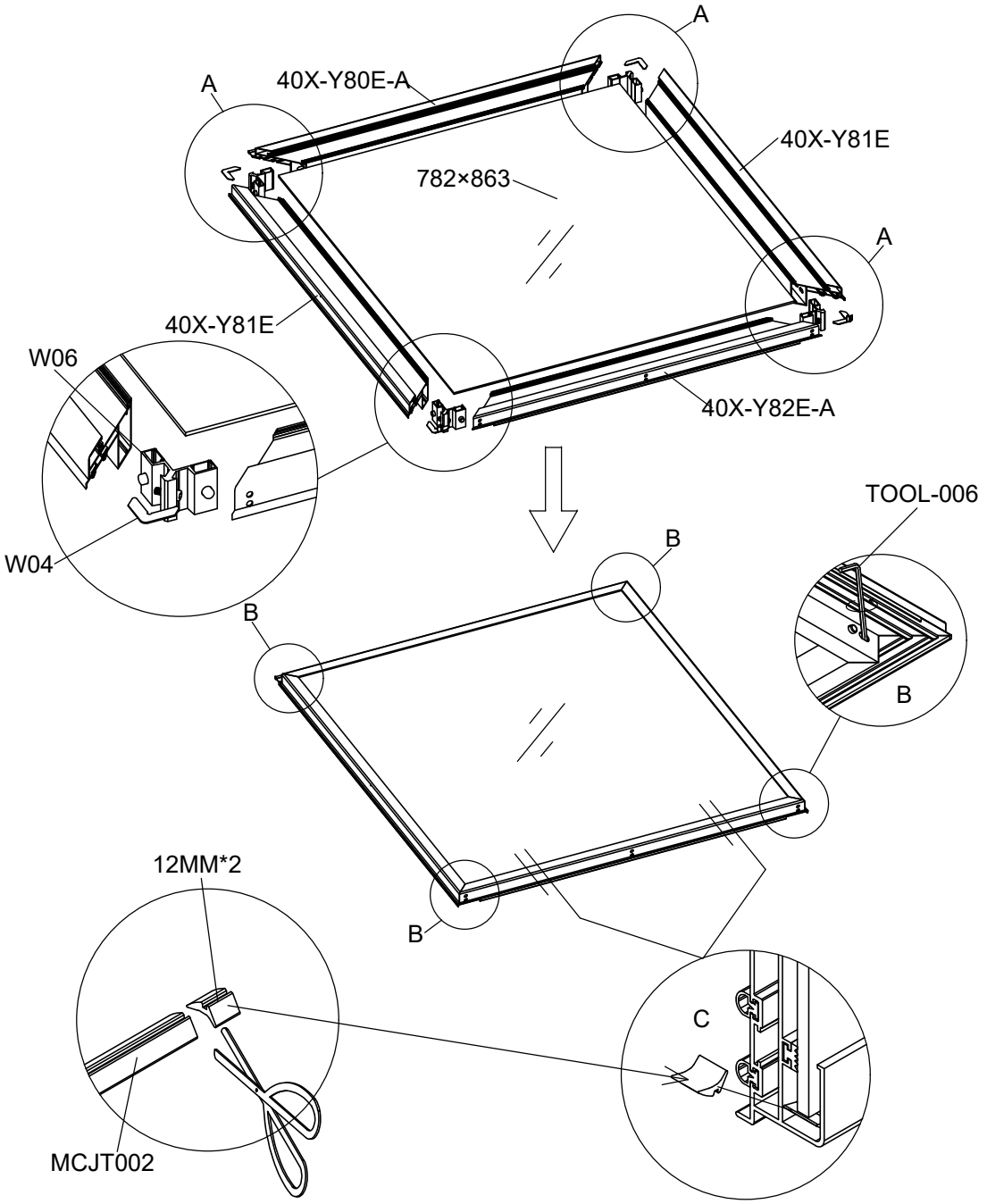

Part	NO.	QTY.					Length(MM)
		3051	3052	3053	3058	3059	
	MCJT002	7M	14M	14M	21M	21M	
	J09	16	32	32	48	48	PCS

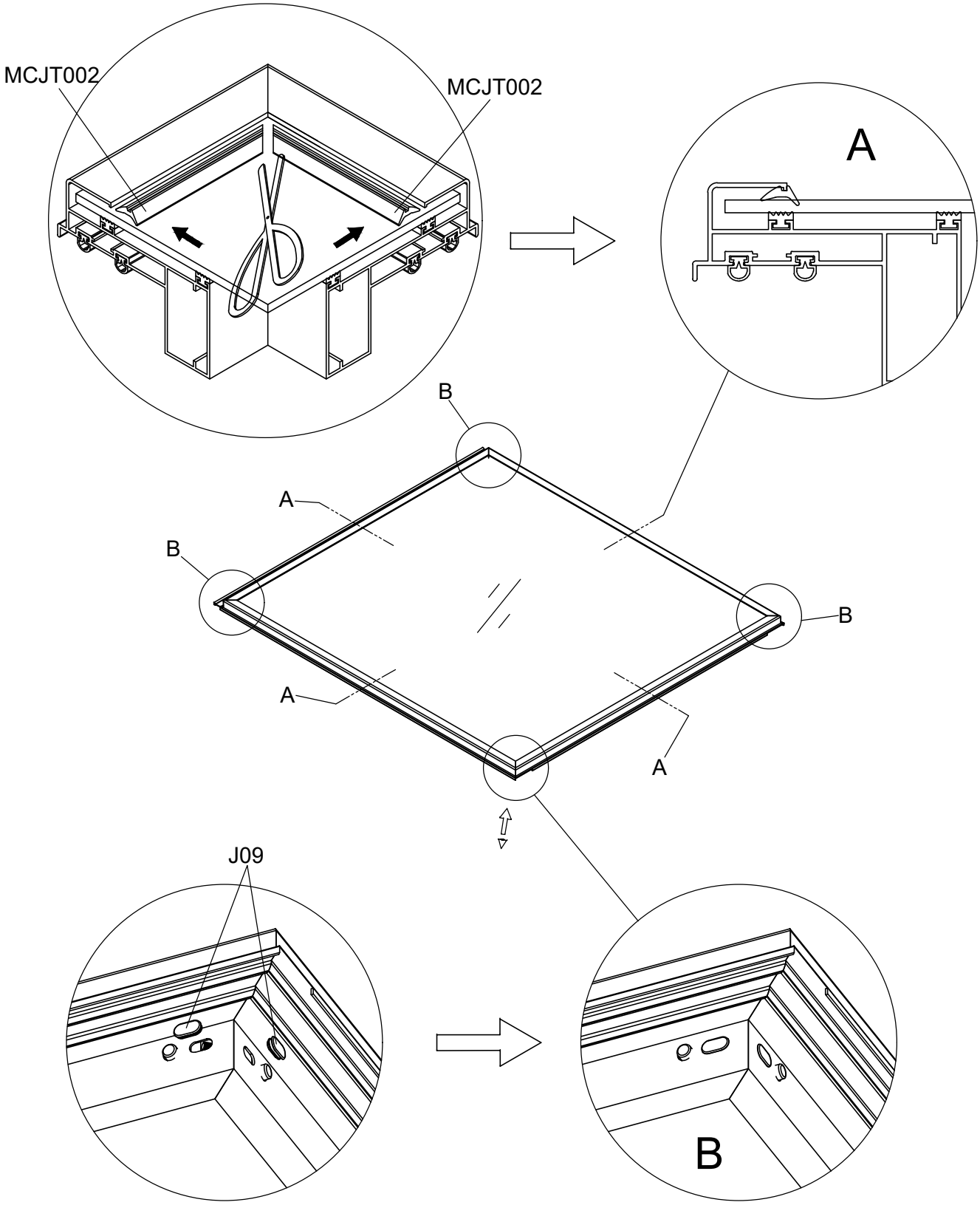

Part	NO.	QTY.					Length(MM)
		3051	3052	3053	3058	3059	
	T07	4	8	8	8	8	PCS

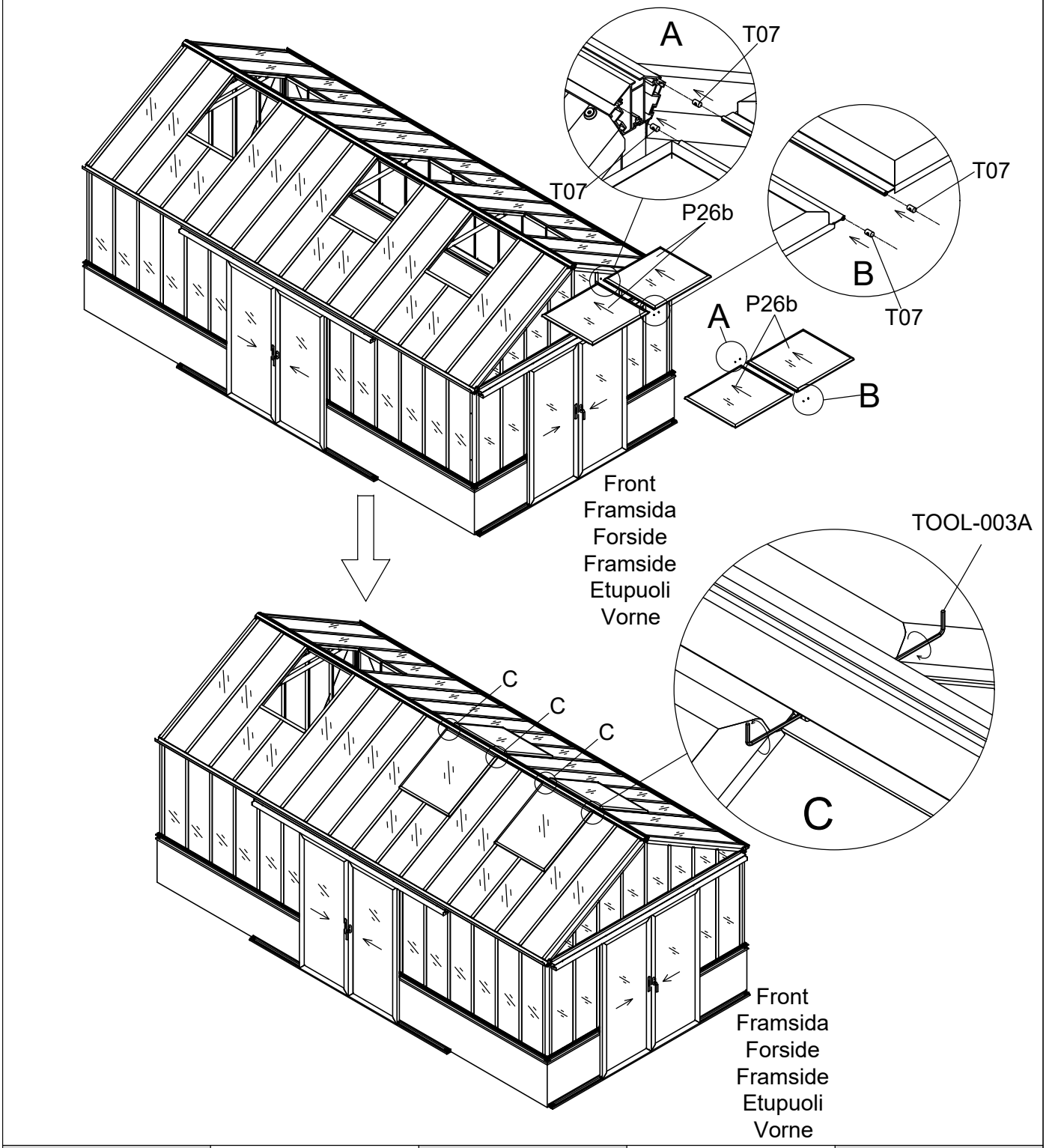

3051	3052	3053	3058	3059
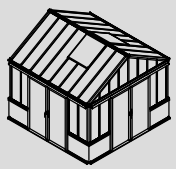	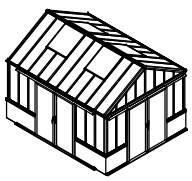	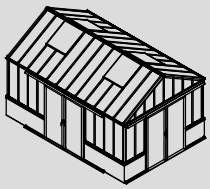	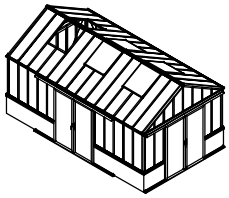	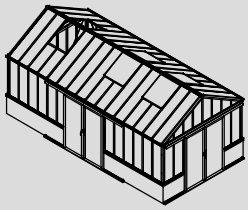

3058	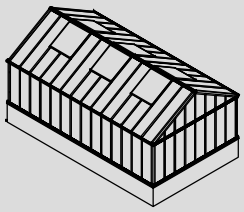
3059	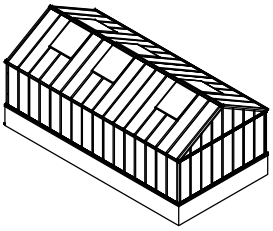

Part	NO.	QTY.		Length(MM)
		3058	3059	
	T07	4	4	PCS

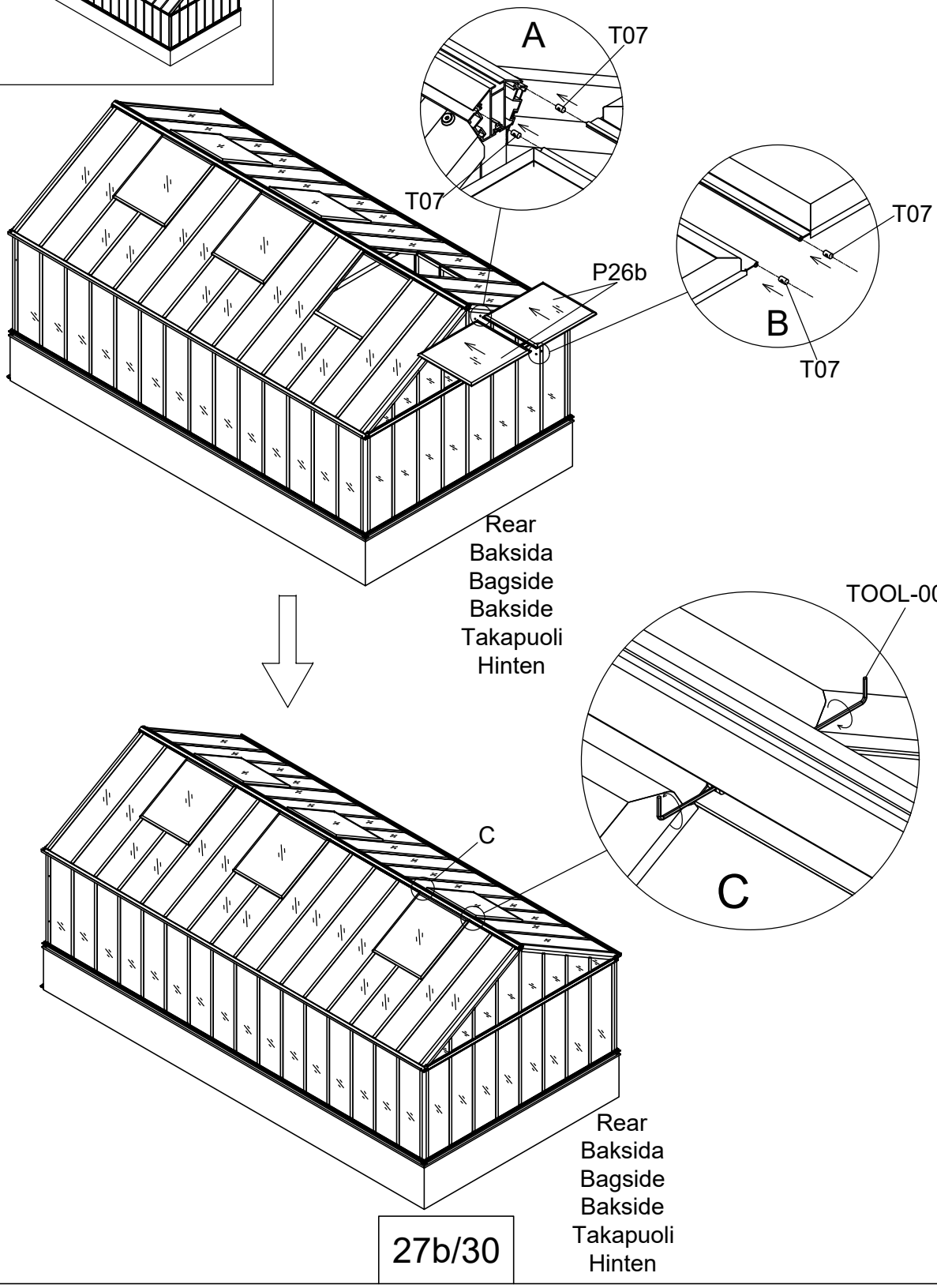

Part	NO.	QTY.	Length(MM)
	7C33-S02	2	PCS

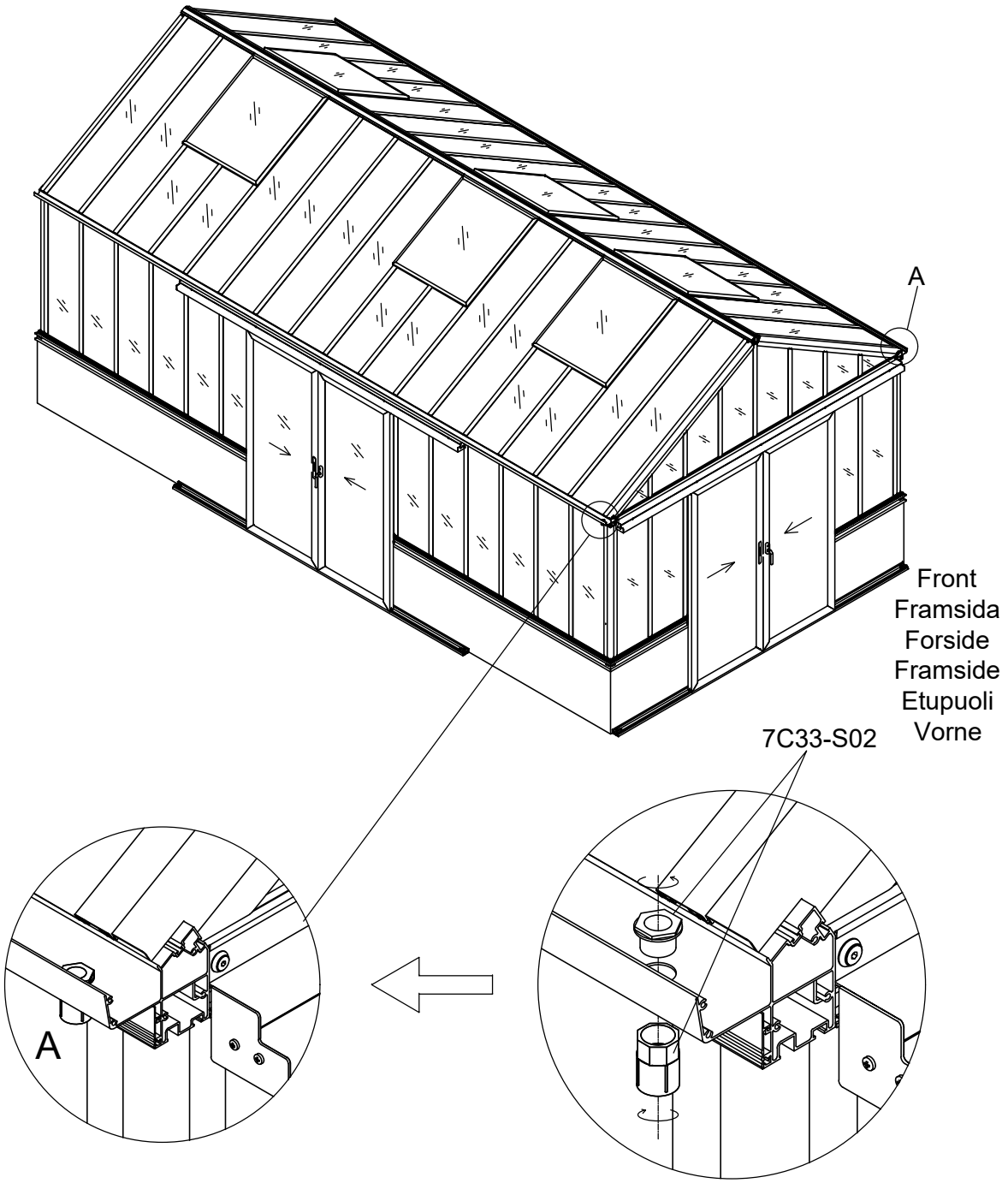

Part	NO.	QTY.	Length(MM)
	7C26-S01A	2	1900
	7C33-S03	4	PCS
	Z4.8-25	4	PCS
	7C33-S04	2	PCS
	J07-A	2	PCS
	J07-B	2	PCS

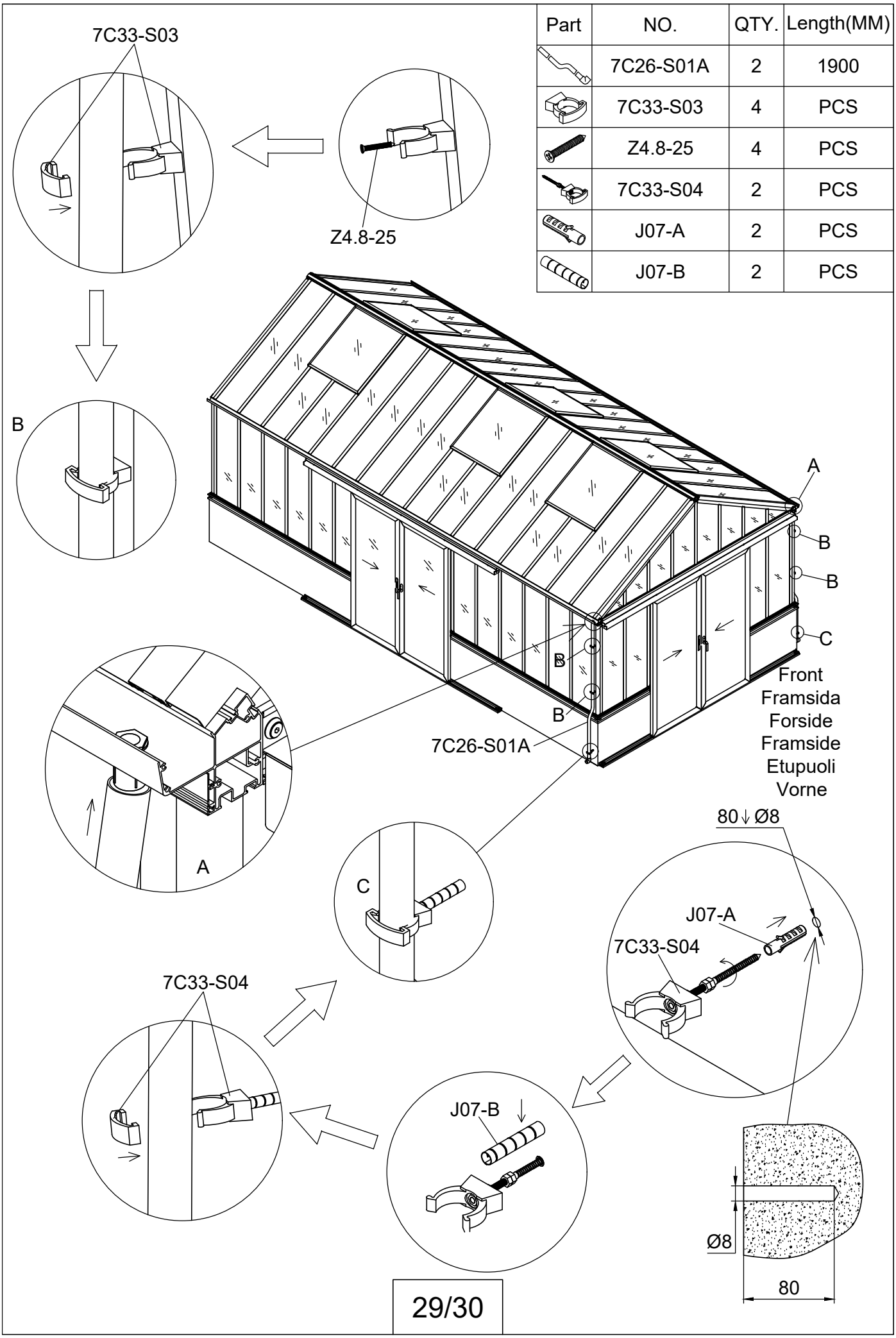

Part	NO.	QTY.	Length(MM)
	7B26-009C	2	PCS
	T10	4	PCS
	T10A	4	PCS
	Za4.2-13	6	PCS
	Z4.2-13	20	PCS

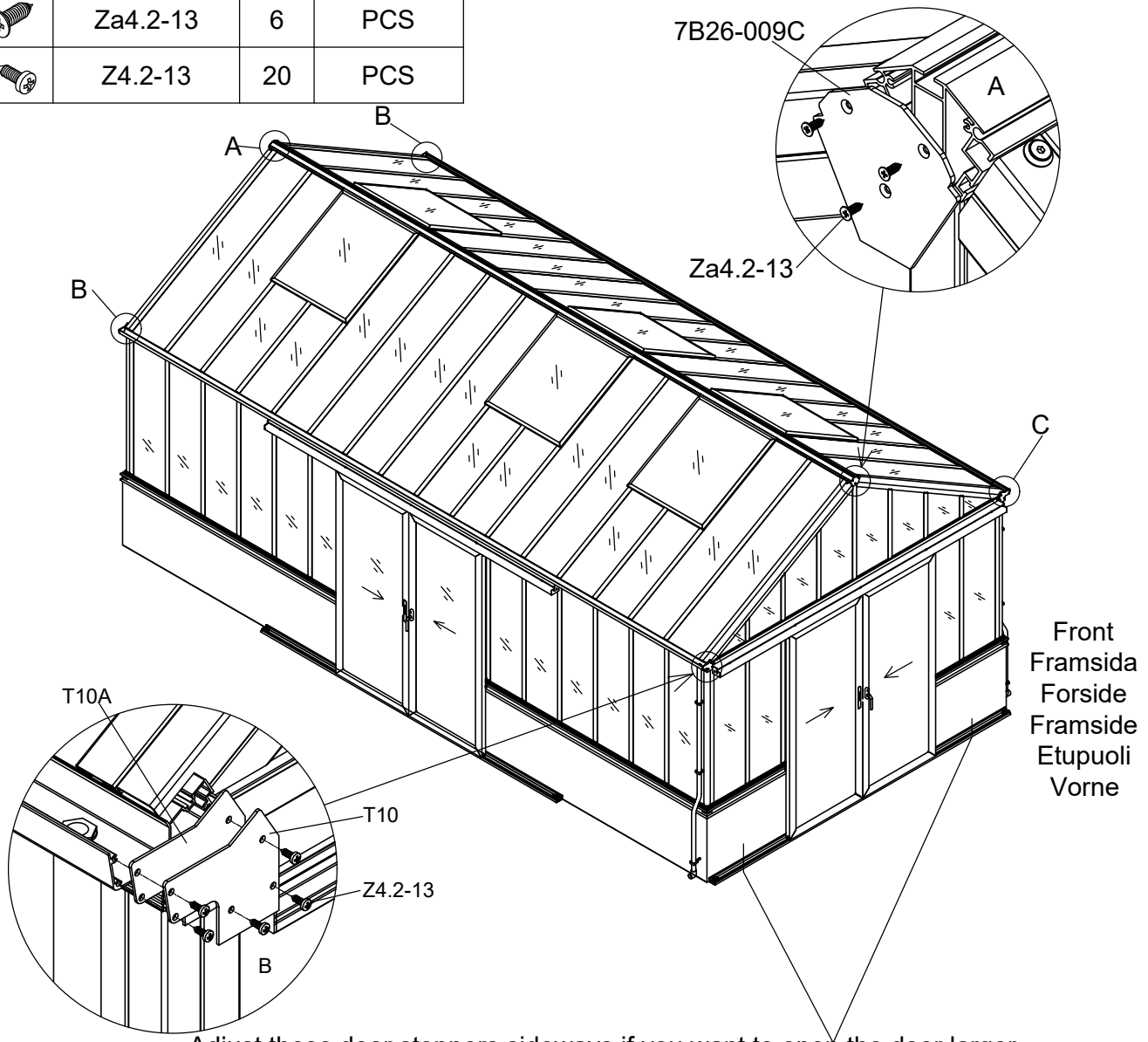

Adjust these door stoppers sideways if you want to open the door larger.
Justera avstånden av dörrstoppen i sidled om ni vill kunna öppna dörrarna ännu mer.
Justere dørstoppene sidelæns, for at give større åbning af døren.
Juster avstanden av dørstopperen sideveis om du vil kunne åpne døren ennå mer.
Säädä liukuovien stoppareiden etäisyys sivusuunnassa, mikäli haluat ovien avautuvan enemmän.
Stellen Sie den Türstopper seitlich ein, wenn Sie die Tür größer öffnen möchten.

3051	3052	3053	3058	3059
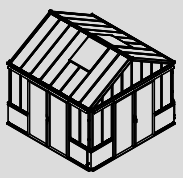	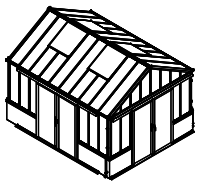	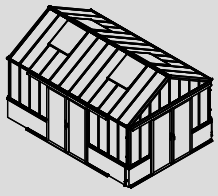	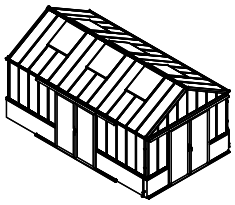	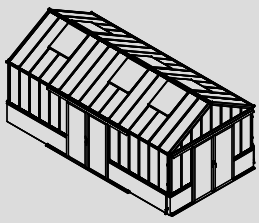

Part	Product	NO.	Length(MM)	CTN NO.	Code
	3051	40A-Y11-4	3173	3043P-S-BASE4	A001
	3052	40A-Y11-5	3924	3043P-S-BASE5	
	3053	40A-Y11-6	4675	3043P-S-BASE6	
	3058	40A-Y11-7	5426	3043P-S-BASE7	
	3059	40A-Y11-8	6177	3043P-S-BASE8	
	3051	40A-Y13R	854	3043PA-S-4	A008
	3052	50A-Y13R	1230	3043PA-S-5	
	3053	40A-S11-6R	1605	3043PA-S-6	
	3058	40A-S11-7R	1981	3043PA-S-7	
	3059	40A-S11-8R	2356	3043PA-S-8	
	3051	40A-Y13L	854	3043PA-S-4	A009
	3052	50A-Y13L	1230	3043PA-S-5	
	3053	40A-S11-6L	1605	3043PA-S-6	
	3058	40A-S11-7L	1981	3043PA-S-7	
	3059	40A-S11-8L	2356	3043PA-S-8	

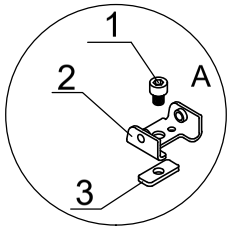

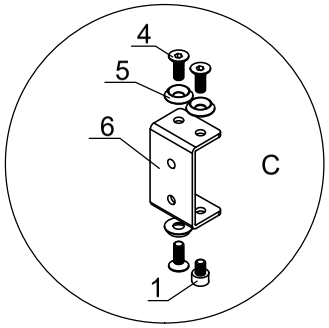

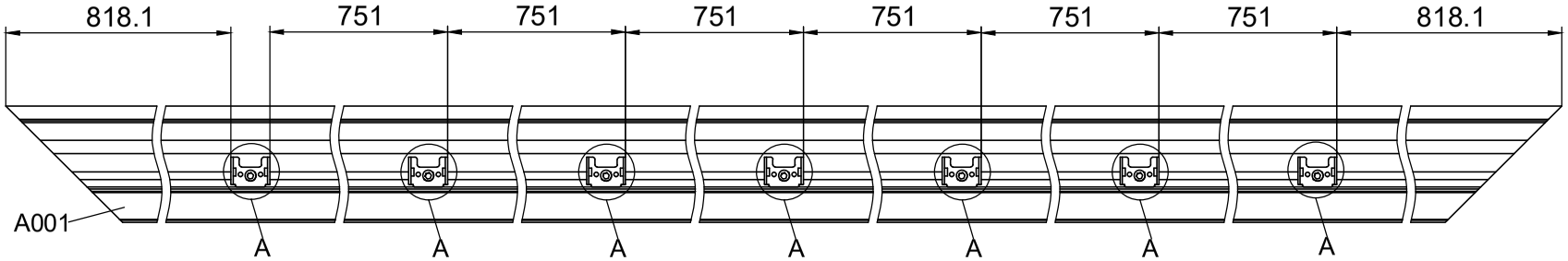

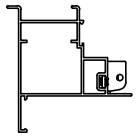

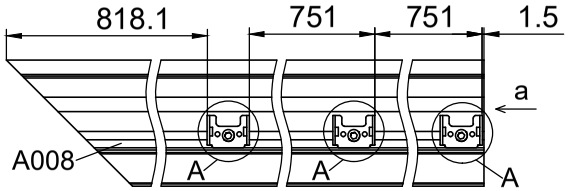

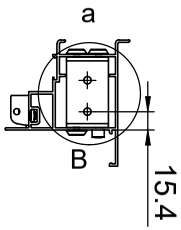

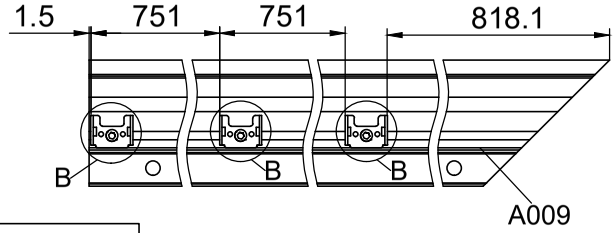

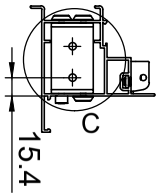

F1

NO.	
1	M6-8
2	7B26-011
3	7B26-025
4	Si6-16
5	J05
6	7B26-037A

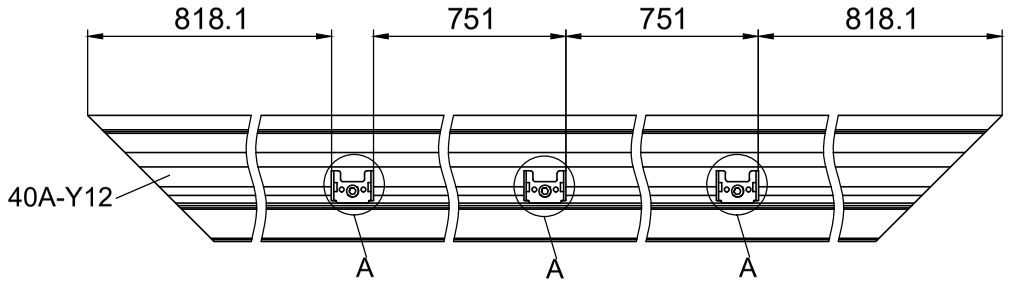

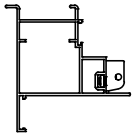

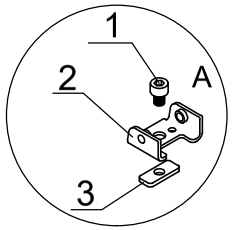

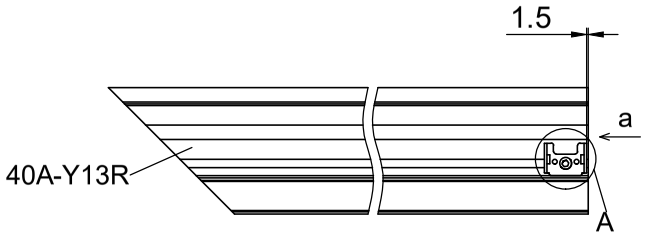

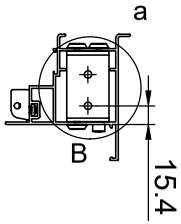

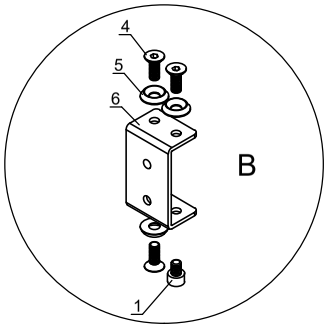

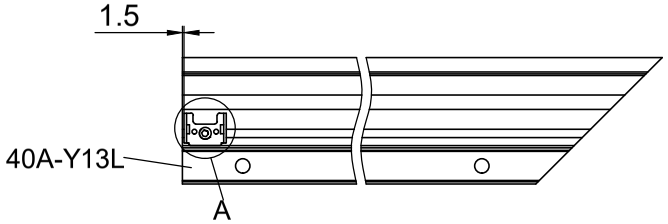

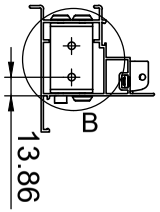

NO.	
1	M6-8
2	7B26-011
3	7B26-025
4	Si6-16
5	J05
6	7B26-037A

F2

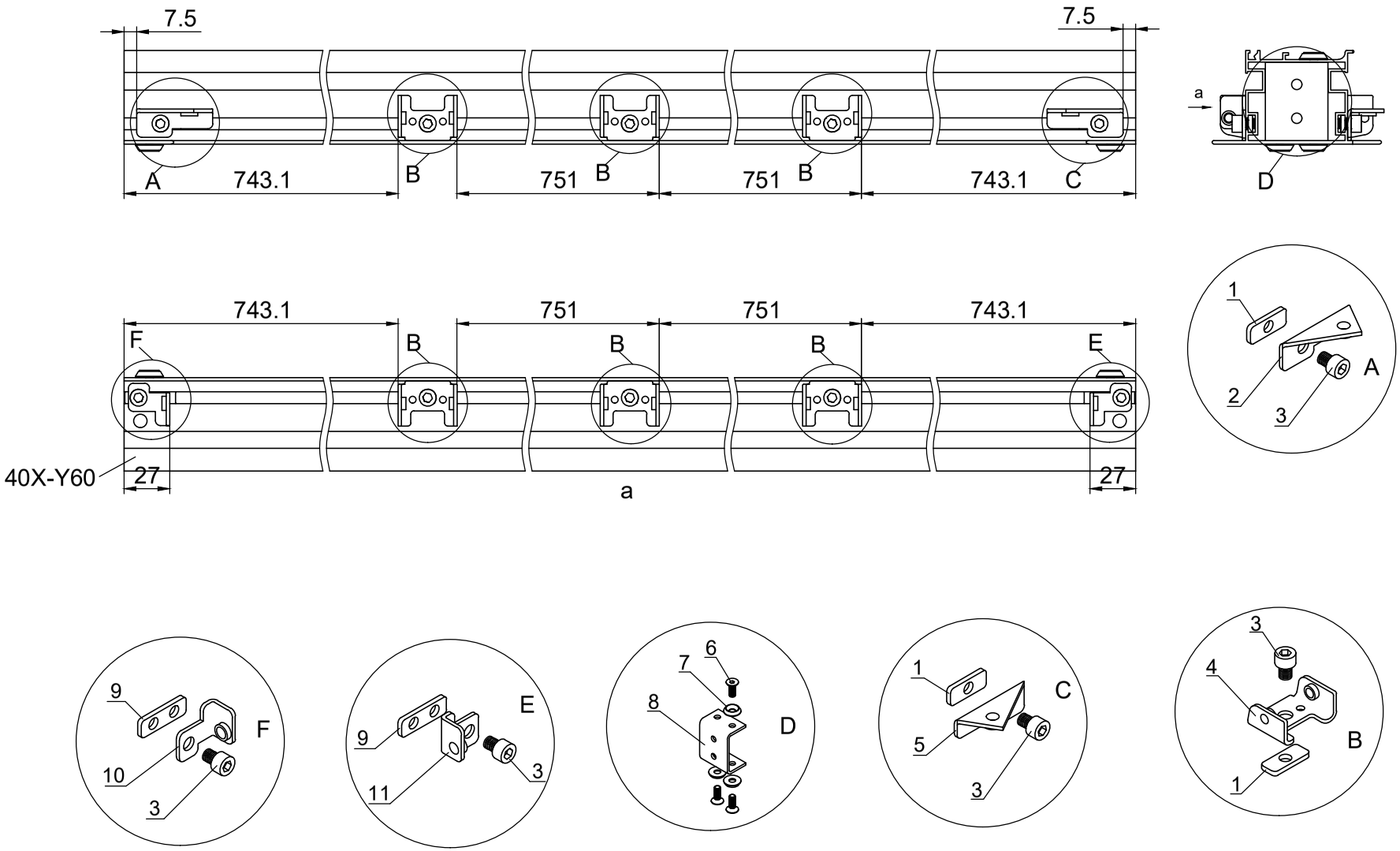

NO.	
1	7B26-025
2	7B26-030
3	M6-8
4	7B26-011
5	7B26-031
6	Si6-16
7	J05
8	7B26-028
9	7B26-033
10	7B26-027
11	7B26-026

F3

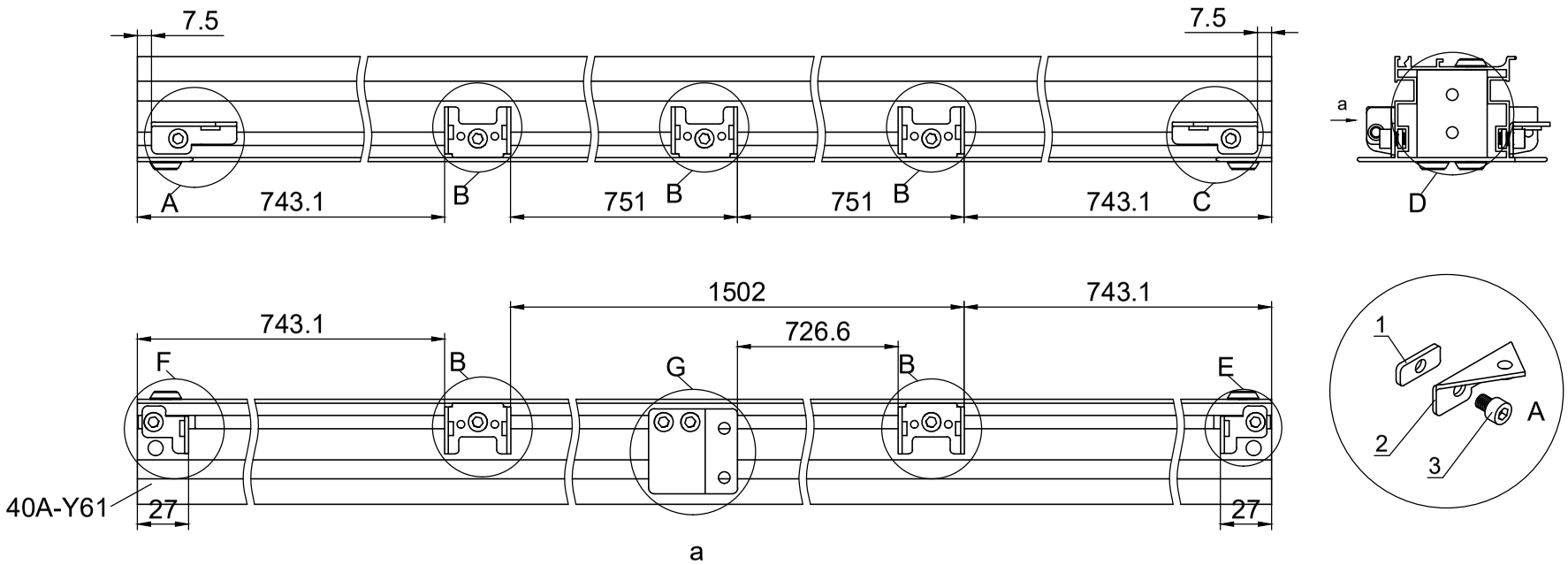

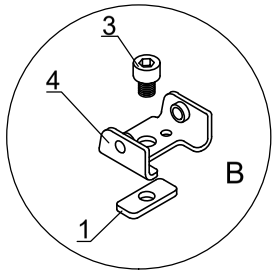

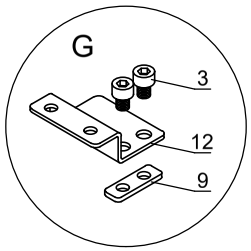

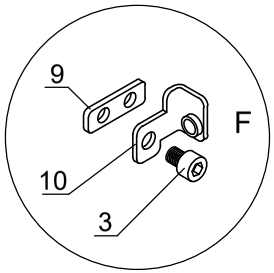

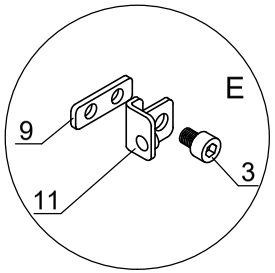

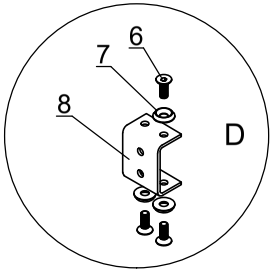

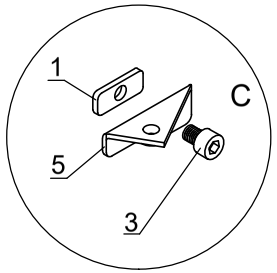

NO.	
1	7B26-025
2	7B26-030
3	M6-8
4	7B26-011
5	7B26-031
6	Si6-16
7	J05
8	7B26-028
9	7B26-033
10	7B26-027
11	7B26-026
12	7B26-036

F4

Part	Product	NO.	Length(MM)	Code
	3051	40X-Y62-4NR	3132	A003
	3052	40X-Y62-5NR	3883	
	3053	40X-Y62-6NR	4634	
	3058	40X-Y62-7NR	5385	
	3059	40X-Y62-8NR	6136	

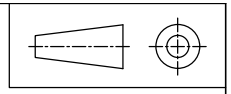

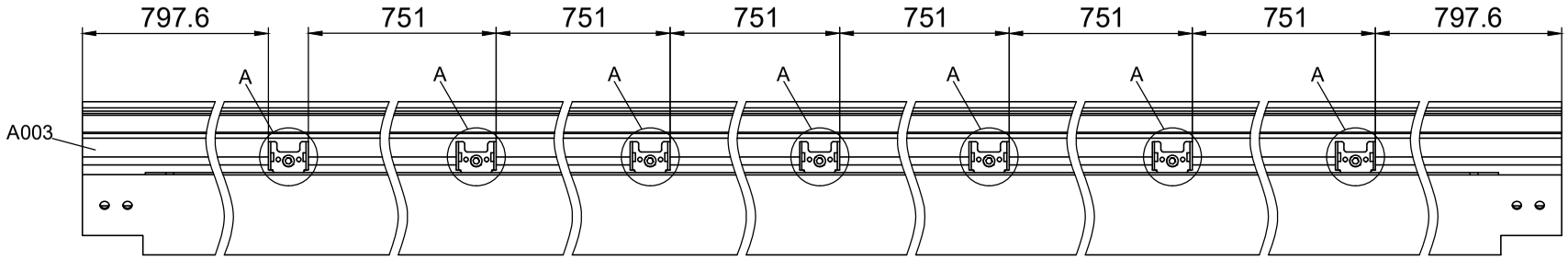

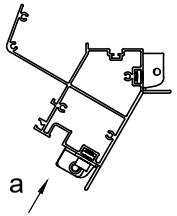

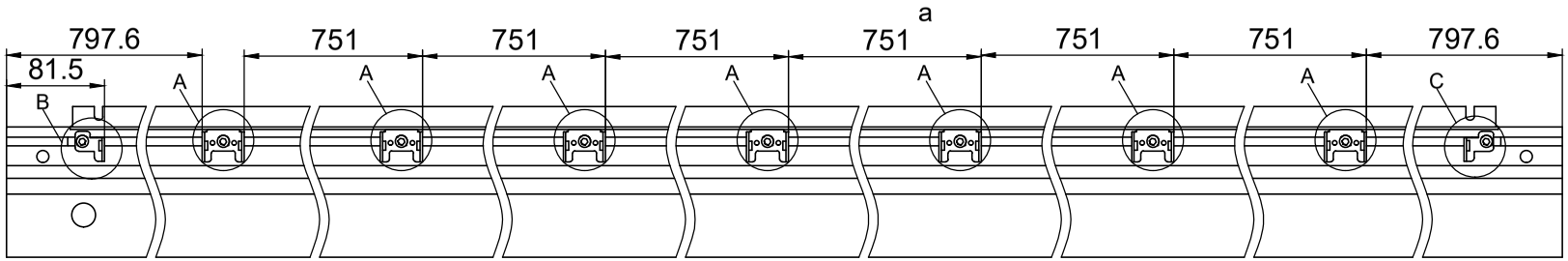

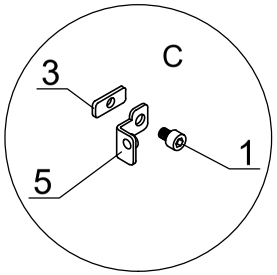

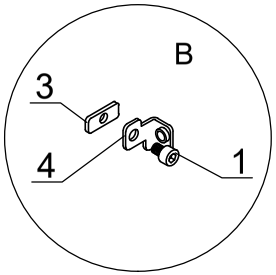

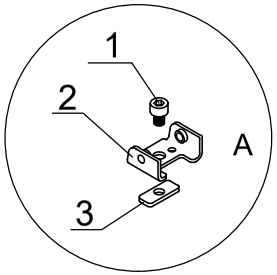

F5

NO.	
1	M6-8
2	7B26-011
3	7B26-025
4	7B26-027
5	7B26-026

Part	Product	NO.	Length(MM)	Code
	3051	40A-Y62-4NL	3132	A004
	3052	40A-Y62-5NL	3883	
	3053	40A-Y62-6NL	4634	
	3058	40A-Y62-7NL	5385	
	3059	40A-Y62-8NL	6136	

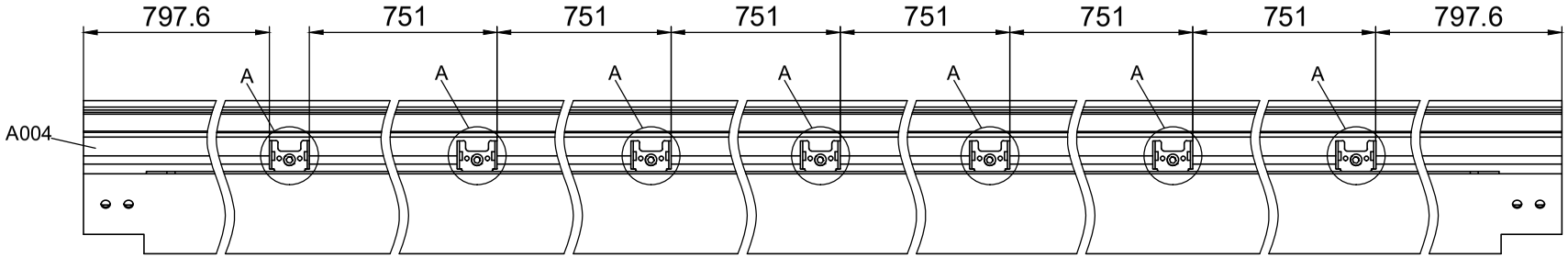

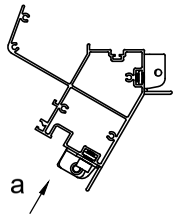

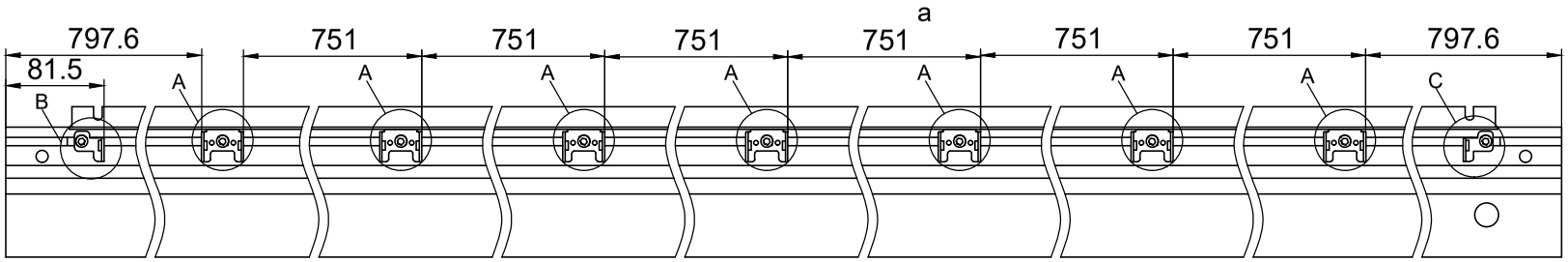

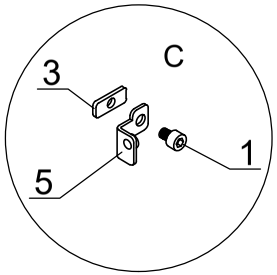

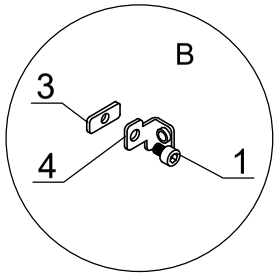

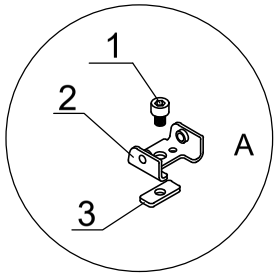

F6

NO.	
1	M6-8
2	7B26-011
3	7B26-025
4	7B26-027
5	7B26-026

Part	Product	NO.	Length(MM)	Code
	3051	40X-Y63-4	3118	A005
	3052	40X-Y63-5	3869	
	3053	40X-Y63-6	4620	
	3058	40X-Y63-7	5371	
	3059	40X-Y63-8	6122	

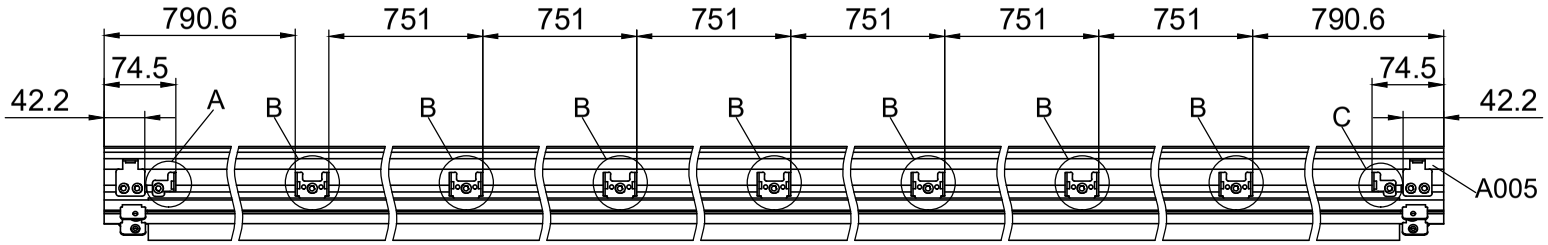

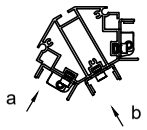

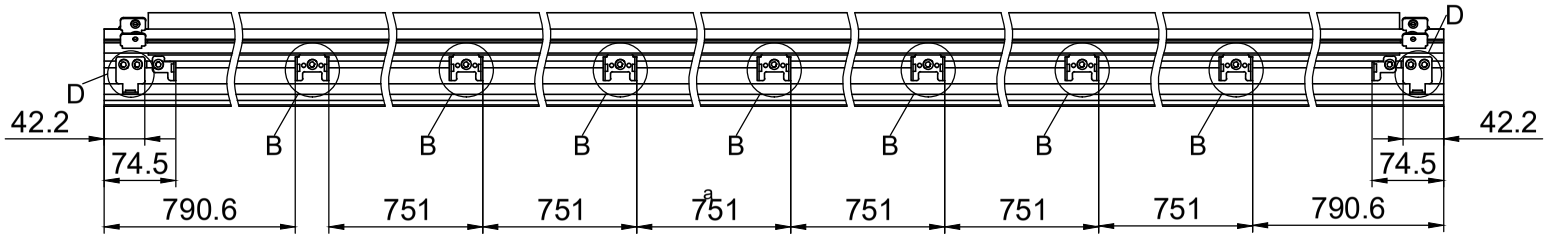

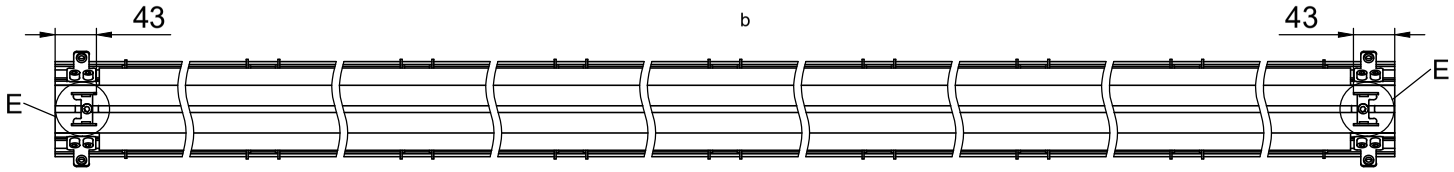

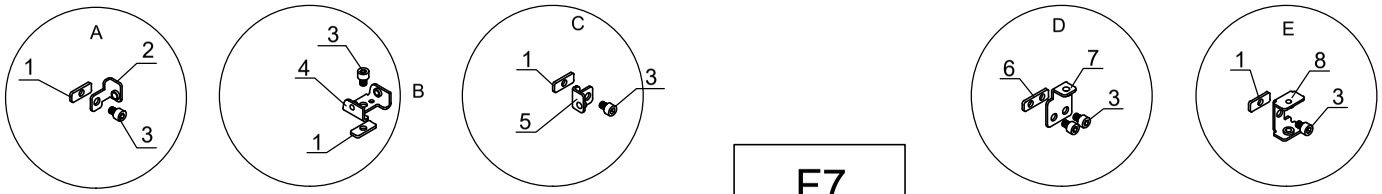

F7

NO.	
1	7B26-025
2	7B26-026
3	M6-8
4	7B26-011
5	7B26-027
6	7B26-033
7	7B26-032
8	7B26-034

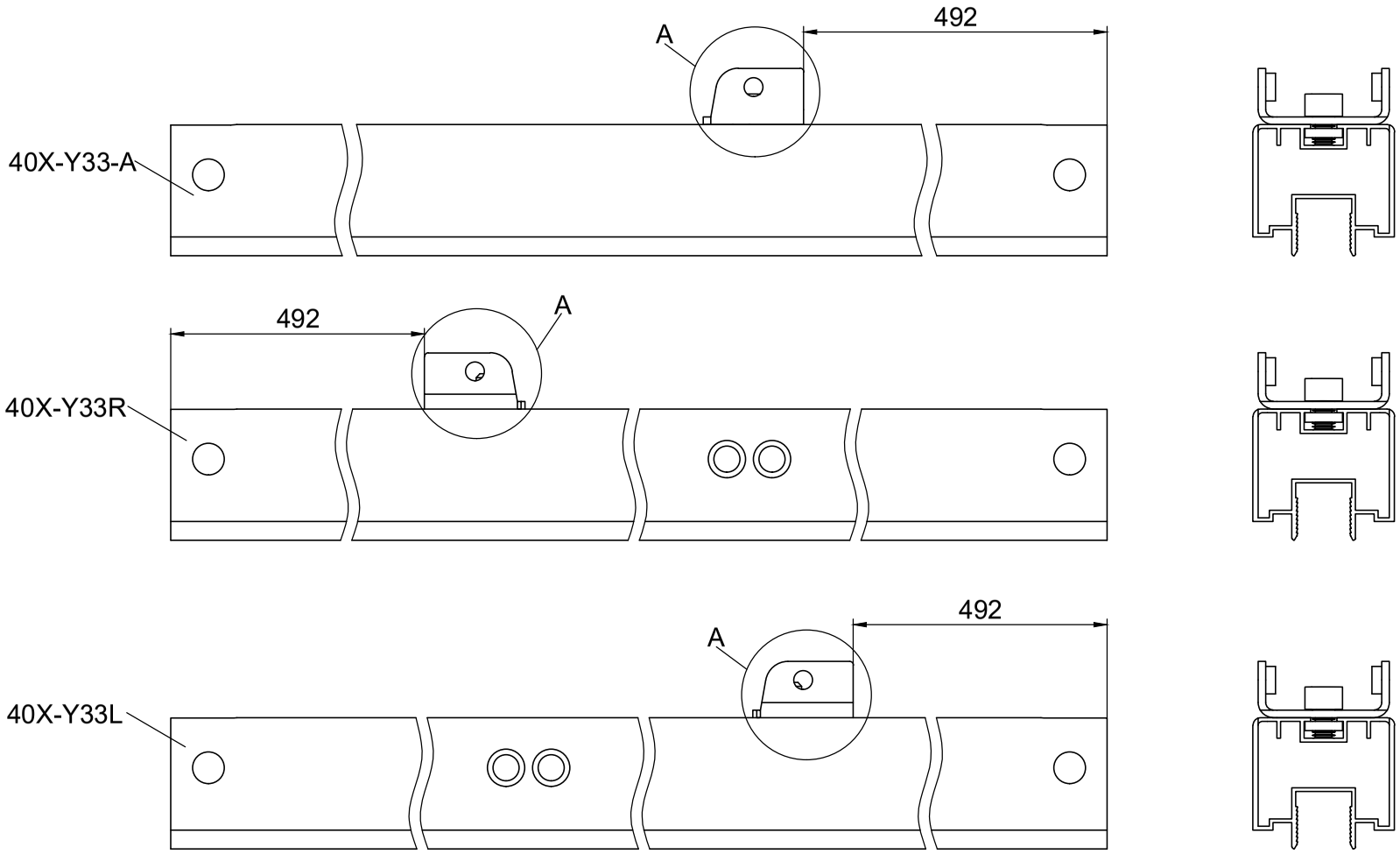

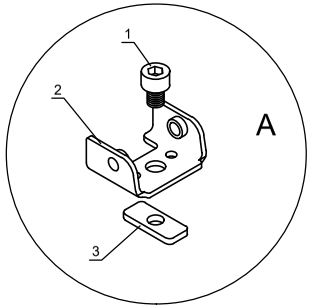

NO.	
1	M6-20
2	7B26-011
3	7B26-025

F8

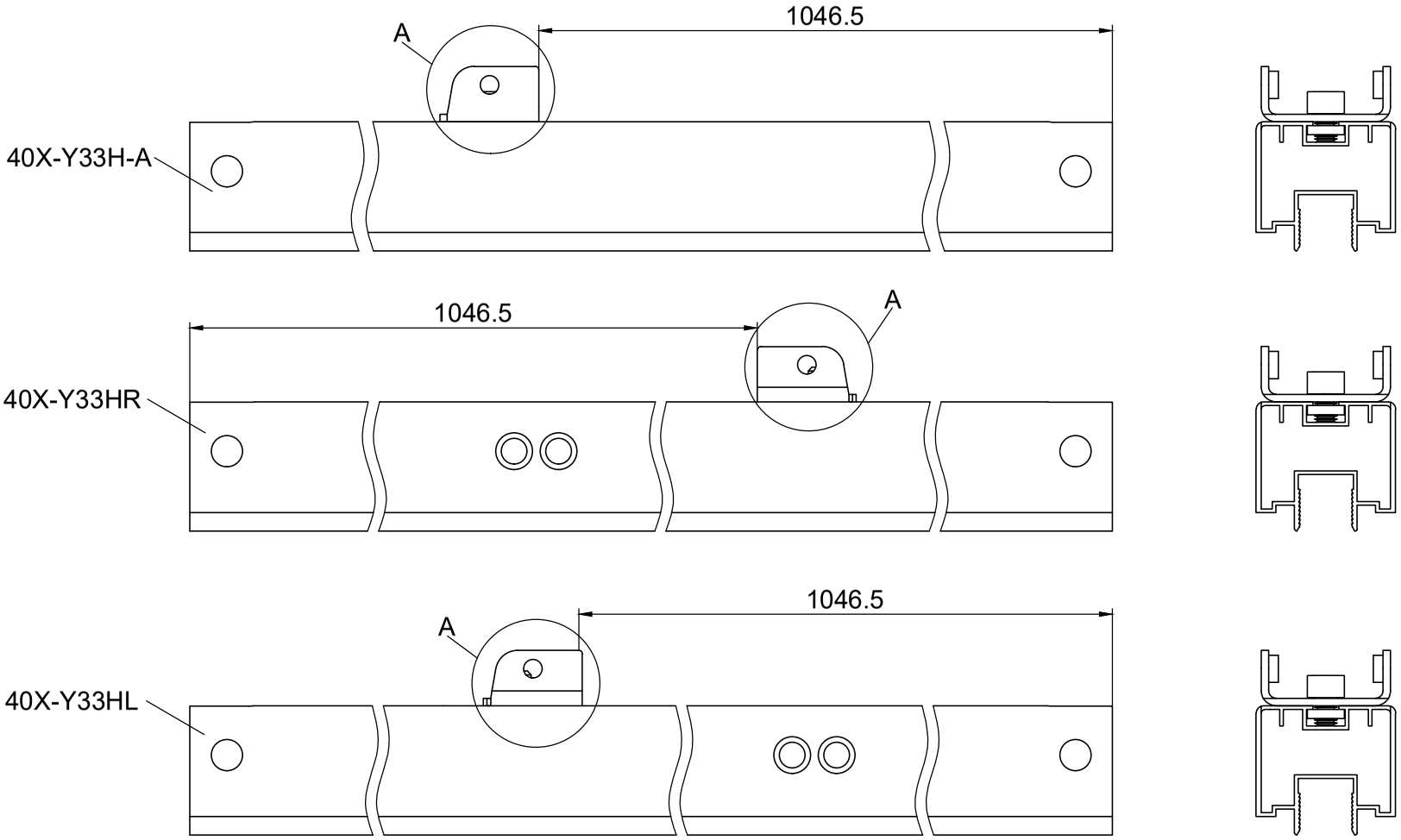

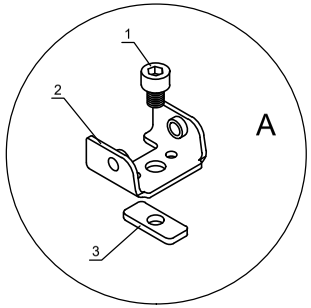

NO.	
1	M6-20
2	7B26-011
3	7B26-025

F9