Green Room®

BY WILLAB GARDEN

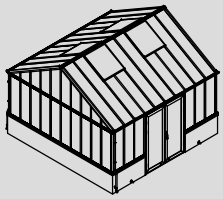	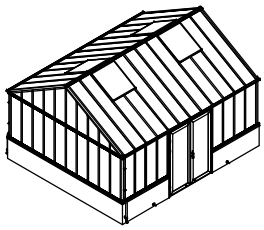	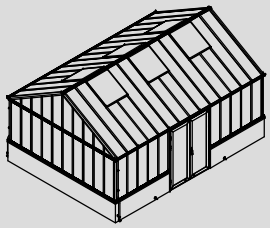	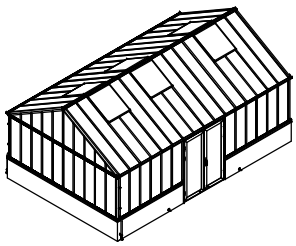
3054-HFD&HXDL	3055-HFD&HXDL	3056-HFD&HXDL	3057-HFD&HXDL
389×389×312cm	464×389×312cm	539×389×312cm	614×389×312cm

Product size (L×W×H):
Storlek (L×B×H):
Størrelse (L×B×H):
Størrelse (L×B×H):
Koko (P×L×K):
Produktgröße (L×B×H):

Please read carefully before assembling.
Two people are needed.

Läs noggrant innan montering.
Det krävs två personer för montering.

Læs venligst omhyggeligt, før montering.
Der kræves to personer til montering.

Les monteringsanvisningen nøye innen montering.
Det kreves to personer for montering.

Lue ohjeet huolellisesti läpi ennen asentamista.
Asentamiseen tarvitaan kaksi henkilöä.

Bitte vor dem Aufbau sorgfältig lesen.
Zwei Personen werden benötigt.

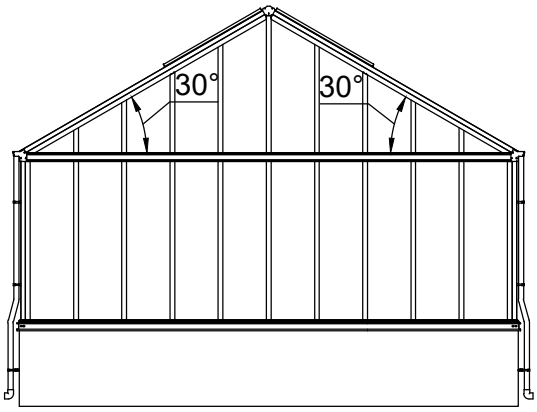

260106

Part	3121		3122		3123		3124		QTY.	Code	Page
	NO.	Length(MM)	NO.	Length(MM)	NO.	Length(MM)	NO.	Length(MM)			
	40X-Y62-5NR	3883	40X-Y62-6NR	4634	40X-Y62-7NR	5385	40X-Y62-8NR	6136	1	A003	P4
	40A-Y62-5NL	3883	40A-Y62-6NL	4634	40A-Y62-7NL	5385	40A-Y62-8NL	6136	1	A004	P4
	40X-Y63-5	3869	40X-Y63-6	4620	40X-Y63-7	5371	40X-Y63-8	6122	1	A005	P6

Part	NO.	QTY.				Length (MM)	Code	Page
		3121	3122	3123	3124			
	40A-Y30	16	16	20	20	1235		P5
	50X-Y33R	4	4	0	0	2150	A015	P8
	50X-Y33HR	0	0	6	6	2150		
	50X-Y33L	4	4	0	0	2150	A016	P8
	50X-Y33HL	0	0	6	6	2150		
	50X-Y33-A	0	2	0	0	2150	A017	P8
	50X-Y33H-A	0	0	0	2	2150		
	50X-Y35	4	5	0	0	1500	A018	P9
	50X-Y35-2460	0	0	6	7	2460		
	40A-Y01	22	22	26	26	1235		P11
	50X-Y06	12	14	16	18	2190		P15
	40X-Y07	4	4	6	6	712		P15
	40X-Y80E-A	4	4	6	6	801		P25

Part	NO.	QTY.				Length (MM)	Code	Page
		3121	3122	3123	3124			
	40X-Y81E	8	8	12	12	882		P25

Part	NO.	QTY.	Length(MM)	Page
	40A-Y20	4	1236	P3
	50X-Y60	1	3774	P4
	50A-Y61	1	3774	P4
	50X-Y31R	2	633	P6
	50X-Y31L	2	633	P6
	50X-Y32	2	1075	P6
	50X-Y21	2	2189	P7
	50X-Y22	2	2189	P7
	40A-Y02	2	1235	P11
	50X-Y03	2	1075	P13~14
	50X-Y04R	2	633	P13~14
	50X-Y04L	2	633	P13~14
	50X-Y05R	2	2149	P13~14
	50X-Y05L	2	2149	P13~14

Part	NO.	QTY.	Length(MM)	Page

Part	NO.	QTY.				Length (MM)	Code	Page
		3121	3122	3123	3124			
	W06	20	20	28	28	46		P2~25
	J09	40	40	56	56	PCS		P2~25
	Si6-16	154	174	194	214	PCS		P3~22
	J05	167	187	207	227	PCS		P3~22
	L04	4	4	0	0	2580	A019	P7
	L25	0	0	4	4	3073		
	S6-10	24	24	28	28	PCS		P7
	Mi6	24	24	28	28	PCS		P7
	Si5-16	16	16	24	24	PCS		P8
	J01	16	16	24	24	PCS		P8
	W04	32	32	40	40	PCS		P18~26
	T07	8	8	12	12	PCS		P27
	7C26-007N	24.5M	26M	27.5M	29M			P12~16
	7C26-009A	5M	6.5M	6.5M	8M			P16
	MCJT002	25M	25M	32M	32M			P20~26

Part	NO.	QTY.	Length(MM)	Page
	7B26-025	8	PCS	P2
	PS8-80	16	PCS	P2
	7B26-017	4	PCS	P3
	M6-8	24	PCS	P3~7
	J08	1	PCS	P3
	7B26-029	4	PCS	P4
	M6-20	8	PCS	P4
	7B26-033	4	PCS	P7
	7B26-005	4	PCS	P7
	Si6-12	4	PCS	P7
	7C33-S02	2	PCS	P28
	7C33-S03	4	PCS	P29
	Z4.8-25	4	PCS	P29
	7C33-S04	2	PCS	P29
	J07-A	2	PCS	P29
	J07-B	2	PCS	P29
	7B26-009C	2	PCS	P30
	T10	4	PCS	P30
	T10A	4	PCS	P30
	Za4.2-13	6	PCS	P30
	Z4.2-13	20	PCS	P30
	L06	8	1400	P4
	7C26-S01A	2	1900	P29

Part	NO.	QTY.	Length(MM)	Page
	TOOL-001	1	274	P2~30
	TOOL-002	1	80	P2~30
	TOOL-003A	1	2MM	P5~27
	TOOL-004A	1	3MM	
	TOOL-005	1	4MM	P3~23
	TOOL-006	1	5MM	P3~26

3040P-HD

Part	NO.	QTY.	Length(MM)	Page
	40A-Y101L	1	1910	P10
	40A-Y101R	1	1910	P10
	40A-Y108NR	1	693	P18
	40A-Y106N	2	1872	P18
	40A-Y107NR	1	1872	P18
	40A-Y109NR	1	693	P18
	40A-Y107NL	1	1872	P18
	40A-Y115	2	766	P18
	40A-Y108NL	1	693	P18
	40A-Y109NL	1	693	P18
	40A-Y112N	4	1730	P19
	40A-Y113N	4	517	P19
	40A-Y114	1	1817	P19
	40A-Y102L	1	1910	P21
	40A-Y102R	1	1910	P21
	40A-Y103	1	1380	P22
	40A-Y104	1	1380	P22
	40A-Y105	1	1380	P22
	7C26-007N	11M		P19
	7C26-031	2	PCS	P10
	Si6-25	8	PCS	P10
	J05	8	PCS	P10
	PSJ8-60	2	PCS	P10
	DQ6-12	2	PCS	P10
	SW6-50	2	PCS	P10
	W07	8	37	P18

Part	NO.	QTY.	Length(MM)	Page
	W04	16	PCS	P18
	T19	2	PCS	P18
	40X-Y91-A3	1	PCS	P18
	Z3.5-25	2	PCS	P18
	Z4.2-38	4	PCS	P19
	7C28-004	4	PCS	P19
	T11R-1	3	PCS	P20~23
	T11R-2	3	PCS	P20~23
	T11L-1	3	PCS	P20~23
	T11L-2	3	PCS	P20~23
	Ma6-12	8	PCS	P21~22
	M6	8	PCS	P21~22
	7C33-001	8	PCS	P21~22
	M6-35	8	PCS	P21~22
	My6-30	8	PCS	P21~22
	7B26-122	2	PCS	P22
	My6-10	4	PCS	P22
	Si5-16	2	PCS	P22
	T16	1	PCS	P24
	7-7-55	1	PCS	P24
	Mc5-35	2	PCS	P24
	T14-1	1	PCS	P24
	T14-2	1	PCS	P24
	8-8-71	1	PCS	P24
	Mc5-55	2	PCS	P24
	T15	1	PCS	P24
	Mc5-35A	1	PCS	P24
	T21	2	PCS	P25
	J07-A	6	PCS	P25
	Za4.2-38	6	PCS	P25
	TOOL-003B	1	2.5MM	P18~23

	Part	NO.	QTY.	Length(MM)	Page	Code
3043PA-S-5		50A-Y13R	1	1230	P2	A008
		50A-Y13L	1	1230	P2	A009
		40A-S11-5AR	1	1125	P3	A010
		40A-S11-5AL	1	1125	P3	A011
		50A-Y13R-A	1	1155		
		50A-Y13L-A	1	1155		
		50A-Y15-R	1	1218	P11	A012
		50A-Y15-L	1	1218	P11	A013
		40X-Y62-5B	2	430	P17	
		50X-Y61N1	2	376	P17	

	Part	NO.	QTY.	Length(MM)	Page	Code
3043PA-S-6		40A-S11-6R	1	1605	P2	A008
		40A-S11-6L	1	1605	P2	A009
		40A-S11-6AR	1	1500	P3	A010
		40A-S11-6AL	1	1500	P3	A011
		40A-S15-6R	1	1593	P11	A012
		40A-S15-6L	1	1593	P11	A013
		40X-Y62-5B	2	430	P17	
		40X-Y62-6B	2	806	P17	

	Part	NO.	QTY.	Length(MM)	Page	Code
3043PA-S-7		40A-S11-7R	1	1981	P2	A008
		40A-S11-7L	1	1981	P2	A009
		40A-S11-7AR	1	1876	P3	A010
		40A-S11-7AL	1	1876	P3	A011
		40A-S15-7R	1	1969	P11	A012
		40A-S15-7L	1	1969	P11	A013
		40X-Y62-6B	2	806	P17	
		40X-Y62-7B	2	1181	P17	

	Part	NO.	QTY.	Length(MM)	Page	Code
3043PA-S-8		40A-S11-8R	1	2356	P2	A008
		40A-S11-8L	1	2356	P2	A009
		40A-S11-8AR	1	2251	P3	A010
		40A-S11-8AL	1	2251	P3	A011
		40A-S15-8R	1	2344	P11	A012
		40A-S15-8L	1	2344	P11	A013
		40X-Y62-7B	2	1181	P17	
		40X-Y62-8B	2	1557	P17	

	Part	NO.	QTY.	Length(MM)	Page
3043PA-S-5G		50A-Y12	1	3924	P2
		50A-Y12-A	1	3774	P3
		40X-Y15-5	1	3900	P11
		50X-Y60-AN	1	3774	P17

	Part	NO.	QTY.	Length(MM)	Page	Code
3000P-40X-Y62-5A		40X-Y62-5A	1	3883	P17	A007

	Part	NO.	QTY.	Length(MM)	Page	Code
3000P-40X-Y62-6A		40X-Y62-6A	1	4634	P17	A007

	Part	NO.	QTY.	Length(MM)	Page	Code
3000P-40X-Y62-7A		40X-Y62-7A	1	5385	P17	A007

	Part	NO.	QTY.	Length(MM)	Page	Code
3000P-40X-Y62-8A		40X-Y62-8A	1	6136	P17	A007

3149P-S

Part	NO.	QTY.	Length(MM)	Page
	40A-Y30	17	1235	P7
	50X-Y31A-R	2	851	P7
	50X-Y31A-L	2	851	P7
	40X-Y31R	2	418	P7
	40X-Y31L	2	418	P7
	40X-Y31A-R	2	201	P7
	40X-Y31A-L	2	201	P7
	40X-Y34C	4	713	P9
	50X-Y33-C	4	1272	P9
	50X-Y33-B	6	2150	P9
	40A-Y01	17	1235	P11
	50X-Y04A-R	2	851	P13~14
	50X-Y04A-L	2	851	P13~14
	40X-Y04R	2	418	P13~14
	40X-Y04L	2	418	P13~14
	40X-Y04A-R	2	201	P13~14
	40X-Y04A-L	2	201	P13~14
	50X-Y06	6	2190	P15
	50X-Y06A	4	1312	P15
	40X-Y82E-A	4	801	P26

Part	NO.	QTY.	Length(MM)	Page
	7B26-011	62	PCS	P2~8
	Ma6-12	62	PCS	P2~8
	M6	62	PCS	P2~8
	Si6-16	124	PCS	P4~22
	J05	124	PCS	P4~22
	S6-10	48	PCS	P8
	7B26-005	12	PCS	P8
	Mi6	48	PCS	P8
	Si5-16	8	PCS	P9
	J01	8	PCS	P9
	TOOL-009	1	341	P2~8

3149P-S-2

Part	NO.	QTY.	Length(MM)	Page
	40A-Y30	4	1235	P7
	40X-Y34C	2	713	P9
	50X-Y33-C	2	1272	P9
	50X-Y33-B	2	2150	P9
	40A-Y01	4	1235	P11
	50X-Y06	2	2190	P15
	50X-Y06A	2	1312	P15
	40X-Y82E-A	2	801	P26

Part	NO.	QTY.	Length(MM)	Page
	7B26-011	14	PCS	P2~8
	Ma6-12	14	PCS	P2~8
	M6	14	PCS	P2~8
	Si6-16	28	PCS	P4~22
	J05	28	PCS	P4~22
	Si5-16	4	PCS	P9
	J01	4	PCS	P9

CTN NO.	QTY.			
	3054	3055	3056	3057
3040P-HD	2	2	2	2
3043PA-S-5	2	1	1	1
3043PA-S-6	0	2	0	0
3043PA-S-7	0	0	2	0
3043PA-S-8	0	0	0	2
3043PA-S-5G	2	2	2	2
3000P-40X-Y62-5A	2	0	0	0
3000P-40X-Y62-6A	0	2	0	0
3000P-40X-Y62-7A	0	0	2	0
3000P-40X-Y62-8A	0	0	0	2
3149P-S	1	1	1	1
3149P-S-2	0	1	1	2

Part	NO.	QTY.				Length(MM)	Page
		3054	3055	3056	3057		
	354×1262	32	36	40	44	1262	P10
	324×203	4	4	4	4	324	P13-14
	354×420	4	4	4	4	420	P13-14
	354×635	4	4	4	4	635	P13-14
	354×852	4	4	4	4	852	P13-14
	354×1068	4	4	4	4	1068	P13-14
	354×2198	12	16	16	20	2198	P15
	354×1320	8	8	12	12	1320	P15
	539×1718	4	4	4	4	1718	P19
	782×863	4	4	6	6	863	P26

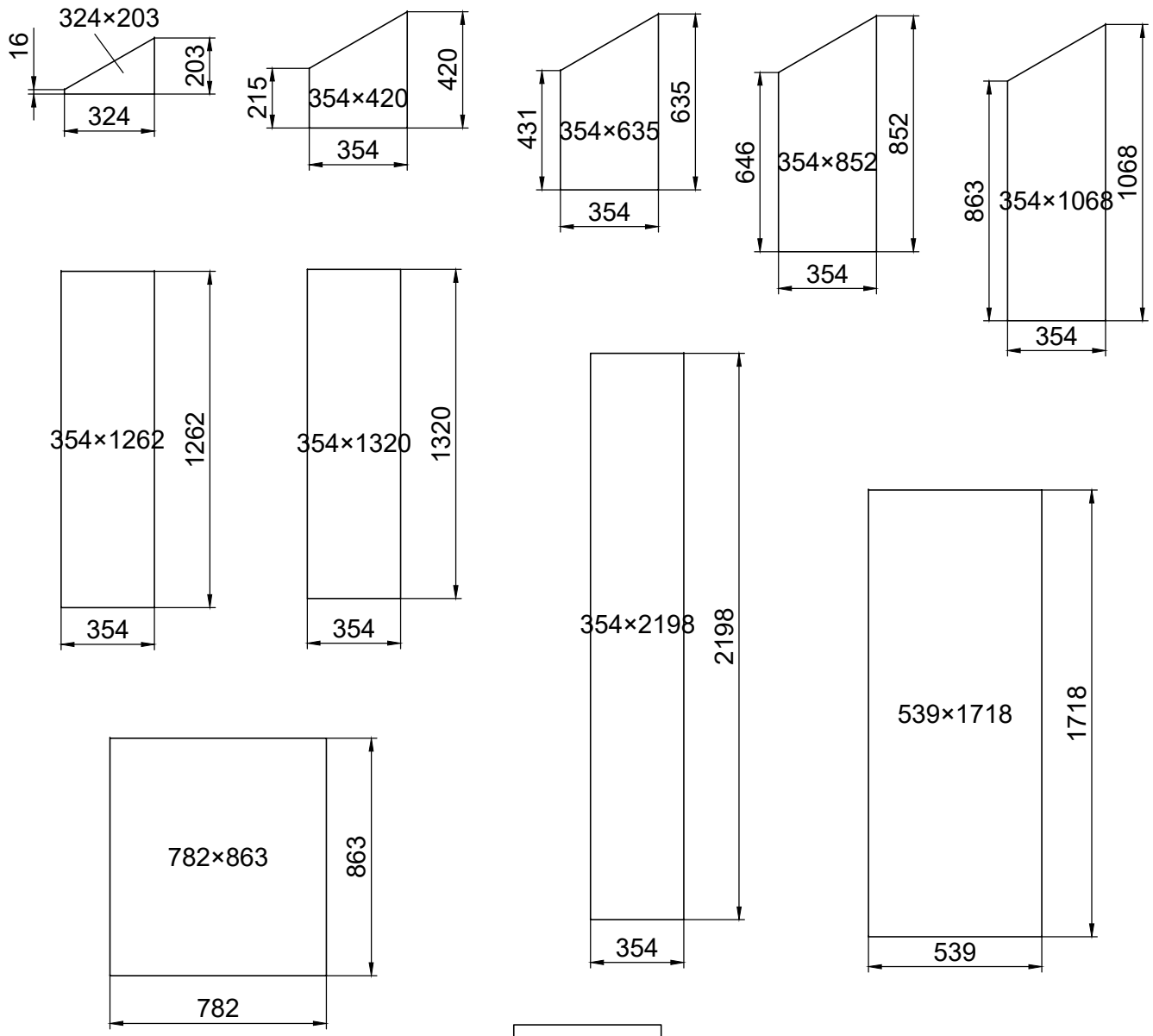

NO.	3054	3055	3056	3057
L1	3890	4641	5392	6143
L2	1208	1583	1959	2334
AREA	15.1 M^2	18.1 M^2	21.0 M^2	23.9 M^2

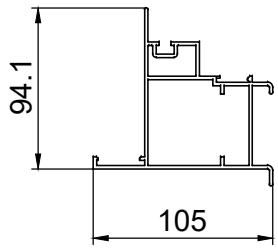

Sealing should be done to prevent frost from destroying the wall. The sealant between the wall and foundation of the greenroom is provided and handled by customers themselves.

Tätning bör göras för att muren ej skall frostsprängas. Tätning mellan mur och sockel står kunden själv för.

Tætningen bør gøres for at forhindre frostsprængninger i muren. Tætningen mellem mur og aluminiumprofil står kunden selv for

En tetning bør lages for å hindre frostsprengning av muren. Tetning mellom mur og sokkel ordnes av kunden selv

Tiivistys täytyy tehdä, jotta muuri ei hajoa pakkasella. Tiiviste muurin ja sokkelin välissä täytyy asiakkaan hoitaa itse

Die Abdichtung sollte erfolgen, um zu verhindern, dass der Frost die Wand zerstört. Die Abdichtung zwischen der Wand und dem Fundament des Greenrooms wird vom Kunden selbst besorgt und durchgeführt.

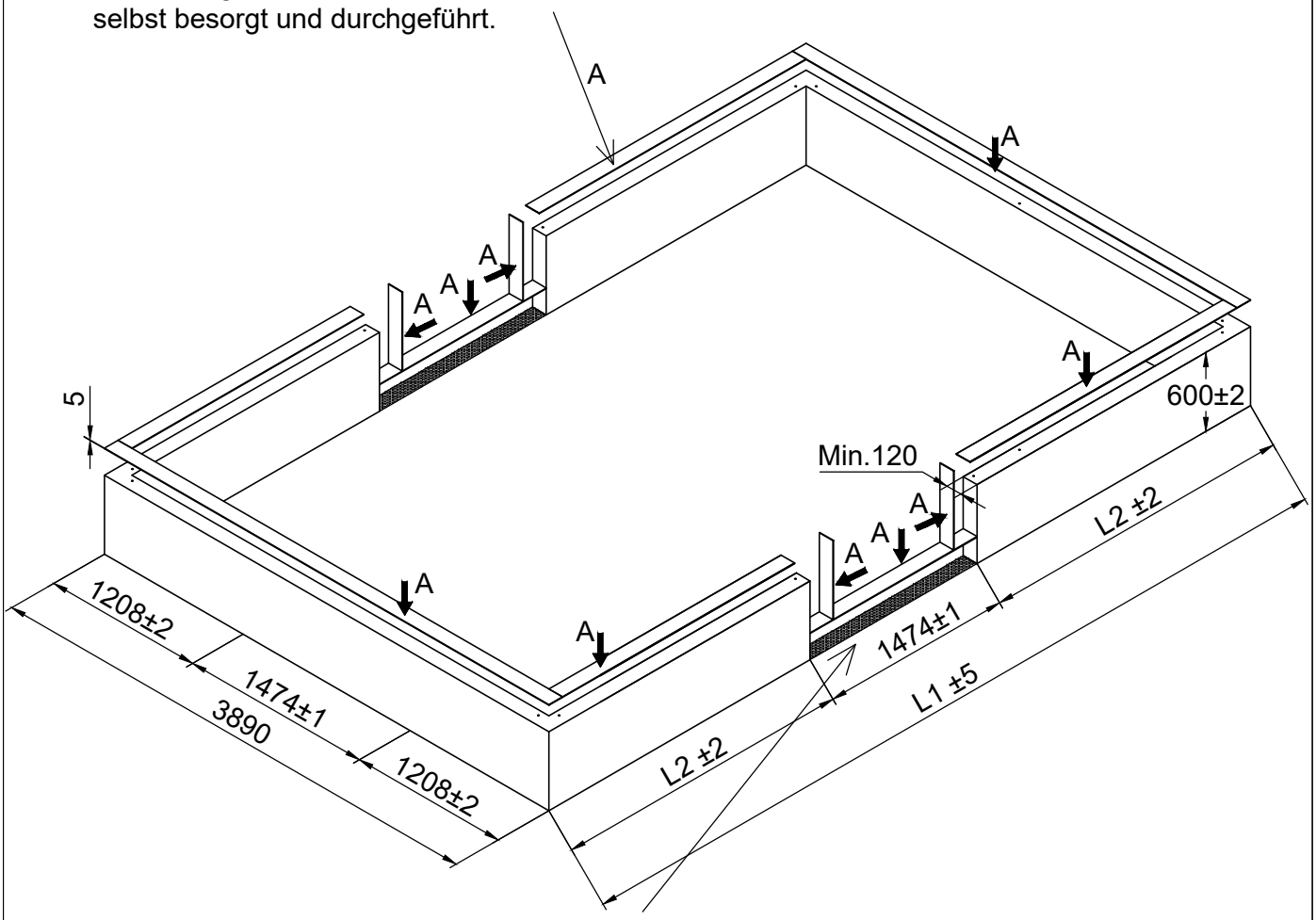

Make sure the floor below the doors frame should be flat and solid.
Se till att underlaget under dörrramen är plan och på solid grund.
Sørg for, at underlaget under dørkarmen er plan og på fast grund.
Sørg for at underlaget under dørterskelen er slett og på solid fundament.
Tarkista, että maa ovikarmin alla on sileä ja tasainen.
Achten Sie darauf, dass der Boden unter dem Türrahmen eben und fest ist.

TOOL-009(341MM)

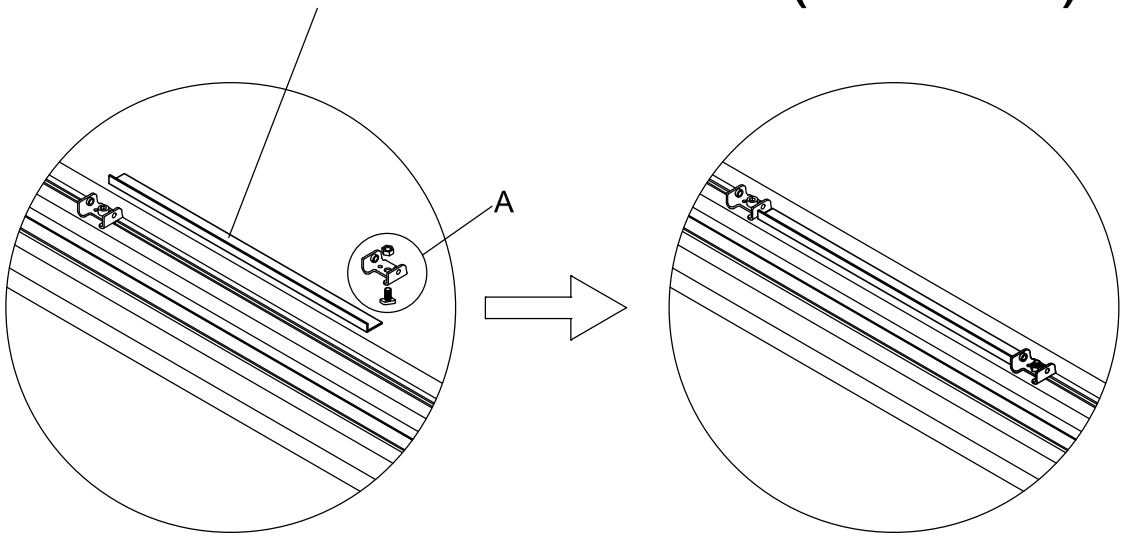

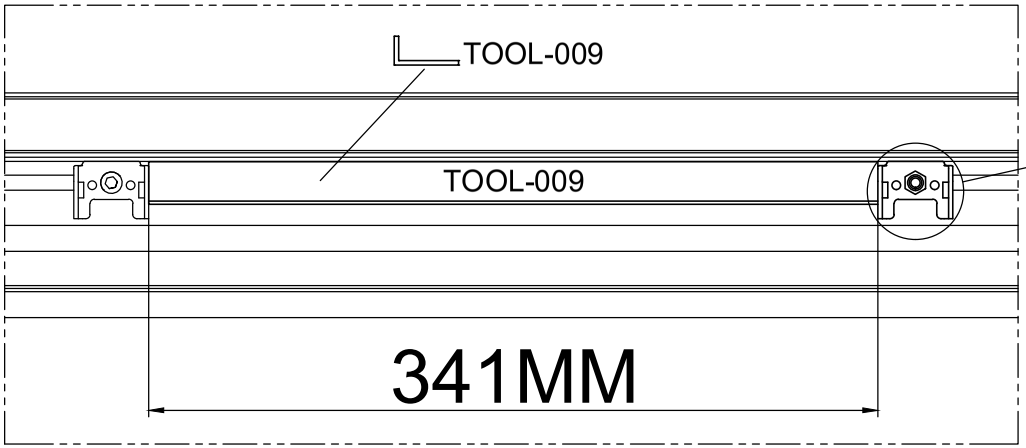

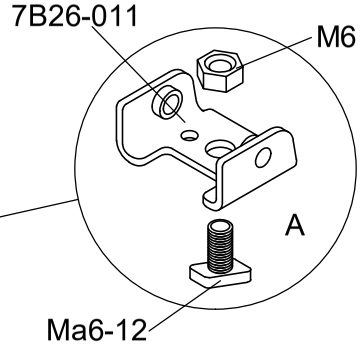

Part	Product	NO.	Length (MM)	QTY.	CTN NO.	Code
	3054	50A-Y13R	1230	1	3043PA-S-5	A008
	3055	40A-S11-6R	1605	1	3043PA-S-6	
	3056	40A-S11-7R	1980	1	3043PA-S-7	
	3057	40A-S11-8R	2356	1	3043PA-S-8	
	3054	50A-Y13L	1230	1	3043PA-S-5	A009
	3055	40A-S11-6L	1605	1	3043PA-S-6	
	3056	40A-S11-7L	1980	1	3043PA-S-7	
	3057	40A-S11-8L	2356	1	3043PA-S-8	

Part	NO.	QTY.	Length(MM)	CTN NO.
	50A-Y12	2	3924	3043PA-S-5G

Part	NO.	QTY.								Length (MM)
		3054		3055		3056		3057		
		3149P-S	3149P-S-2	3149P-S	3149P-S-2	3149P-S	3149P-S-2	3149P-S	3149P-S-2	
	7B26-011	14	0	17	1	17	1	17	5	PCS
	Ma6-12	14	0	17	1	17	1	17	5	PCS
	M6	14	0	17	1	17	1	17	5	PCS

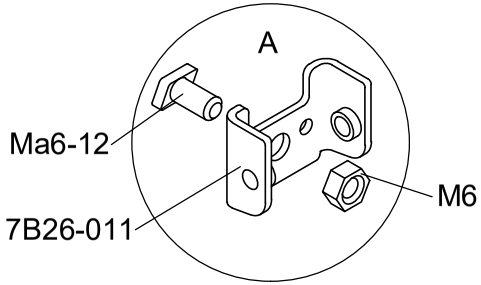

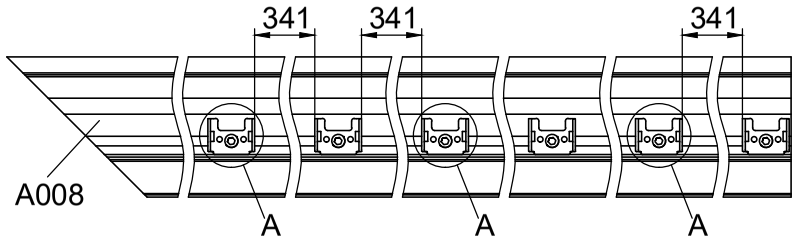

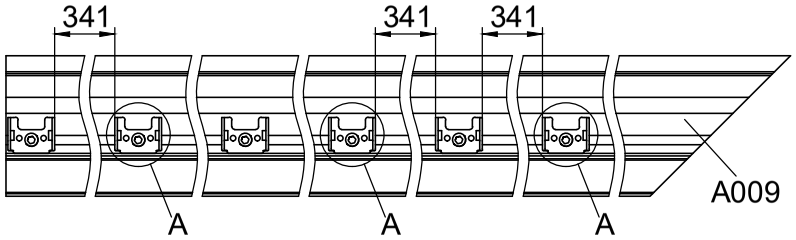

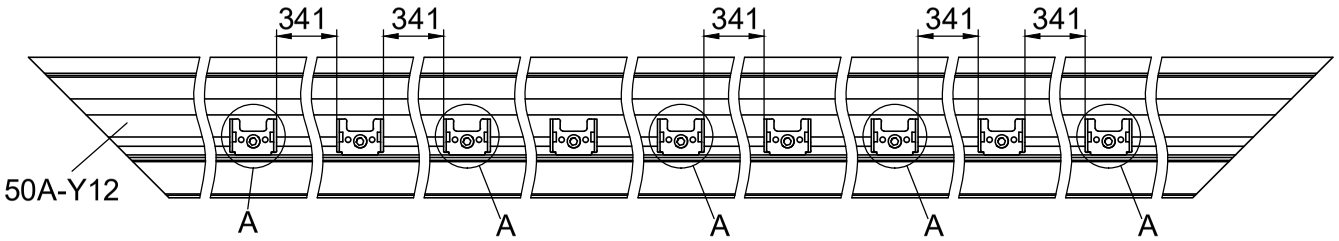

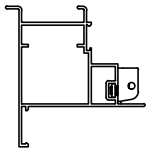

Part	NO.	QTY.	Length(MM)
	7B26-025	8	PCS
	W06	4	46

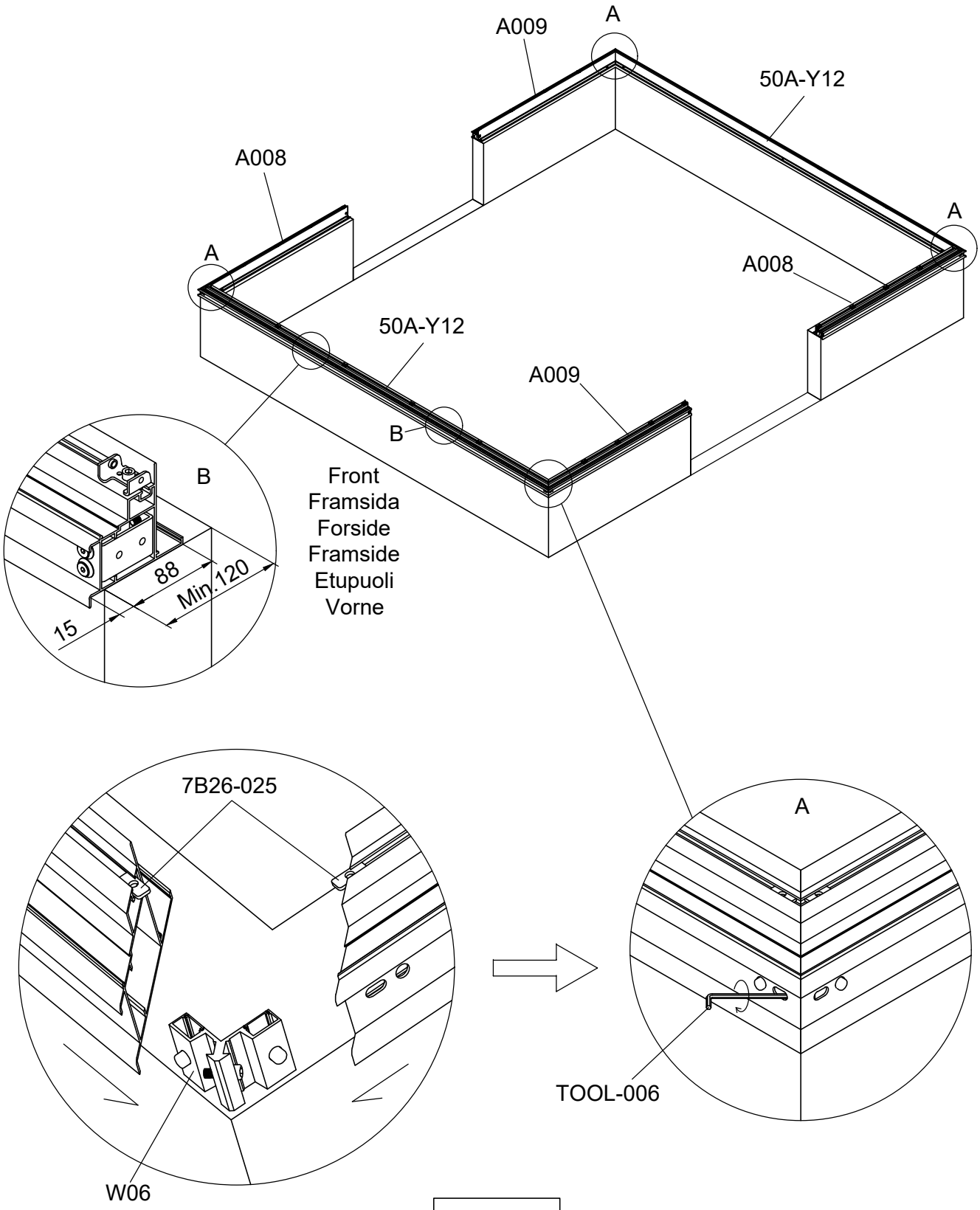

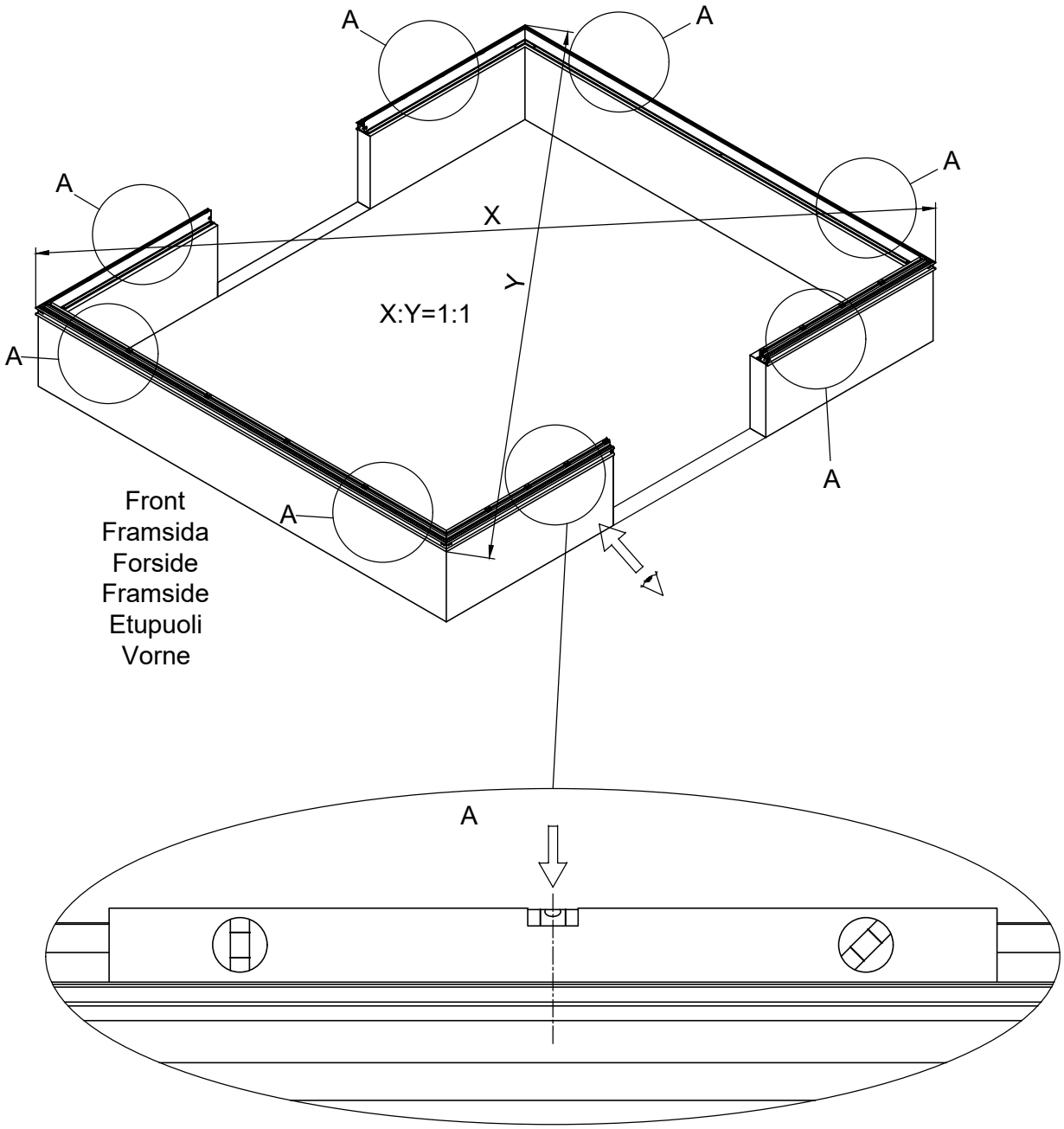
A
A
A
A
A
A
A
X
Y
X:Y=1:1
Front
Framsida
Forside
Framside
Etupuoli
Vorne
A

Part	NO.	QTY.	Length(MM)
	PS8-80	14	PCS

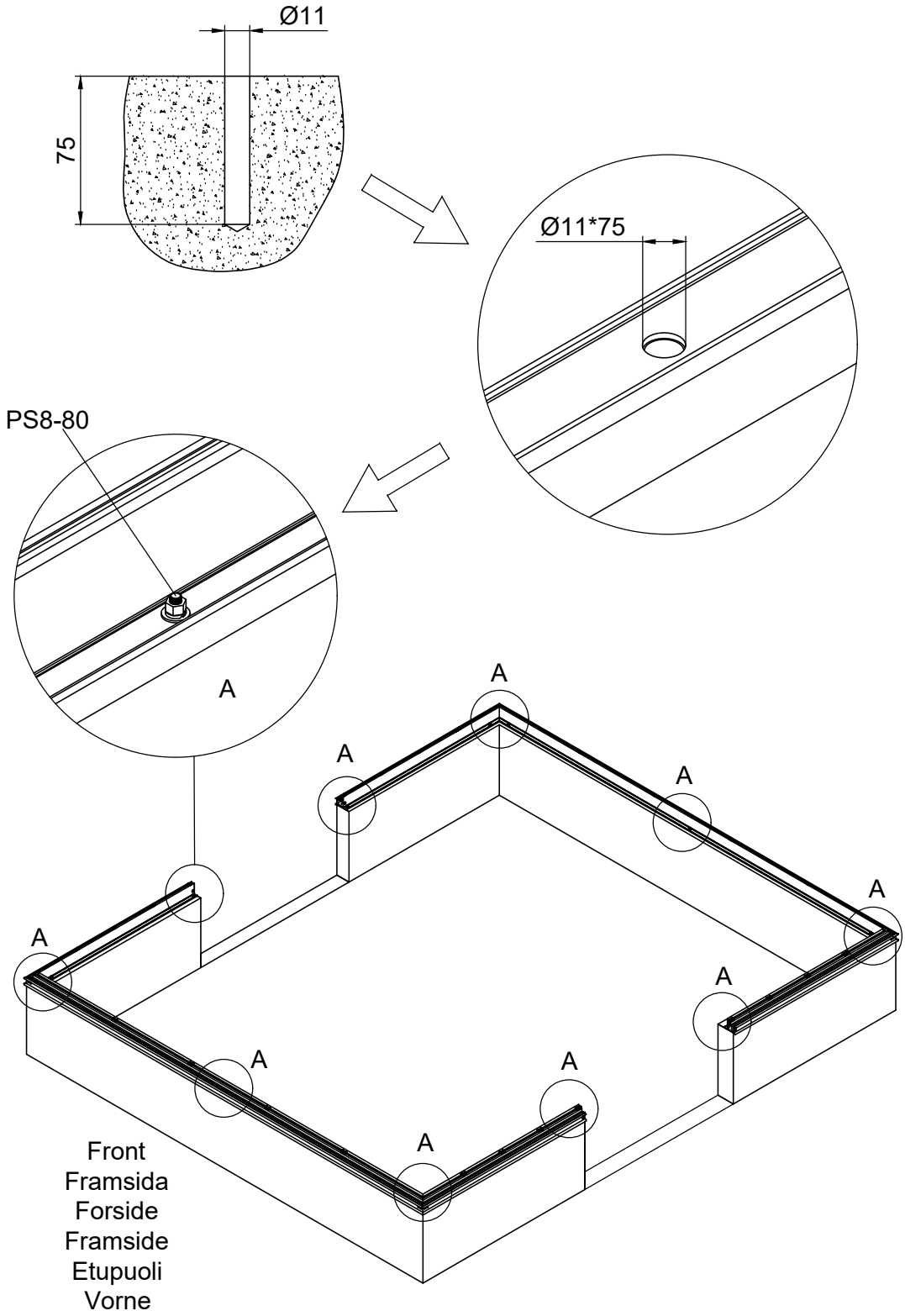

Part	Product	NO.	Length (MM)	QTY.	CTN NO.	Code
	3054	40A-S11-5AR	1125	1	3043PA-S-5	A010
	3055	40A-S11-6AR	1500	1	3043PA-S-6	
	3056	40A-S11-7AR	1876	1	3043PA-S-7	
	3057	40A-S11-8AR	2251	1	3043PA-S-8	
	3054	40A-S11-5AL	1125	1	3043PA-S-5	A011
	3055	40A-S11-6AL	1500	1	3043PA-S-6	
	3056	40A-S11-7AL	1876	1	3043PA-S-7	
	3057	40A-S11-8AL	2251	1	3043PA-S-8	

Part	NO.	Length(MM)	QTY.	CTN NO.
	50A-Y12-A	3774	2	3043PA-S-5G

Part	NO.	QTY.	Length(MM)
	J09	8	PCS

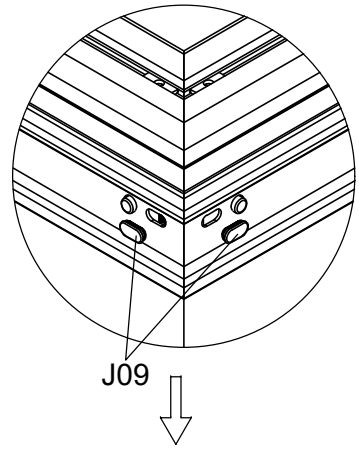

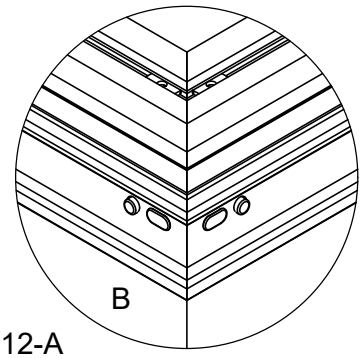

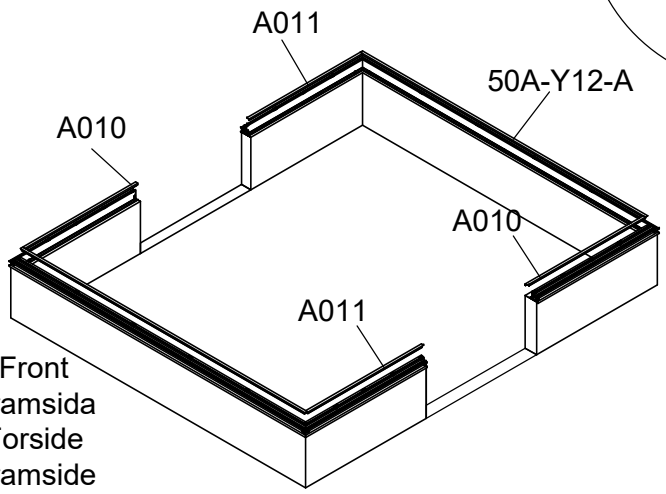

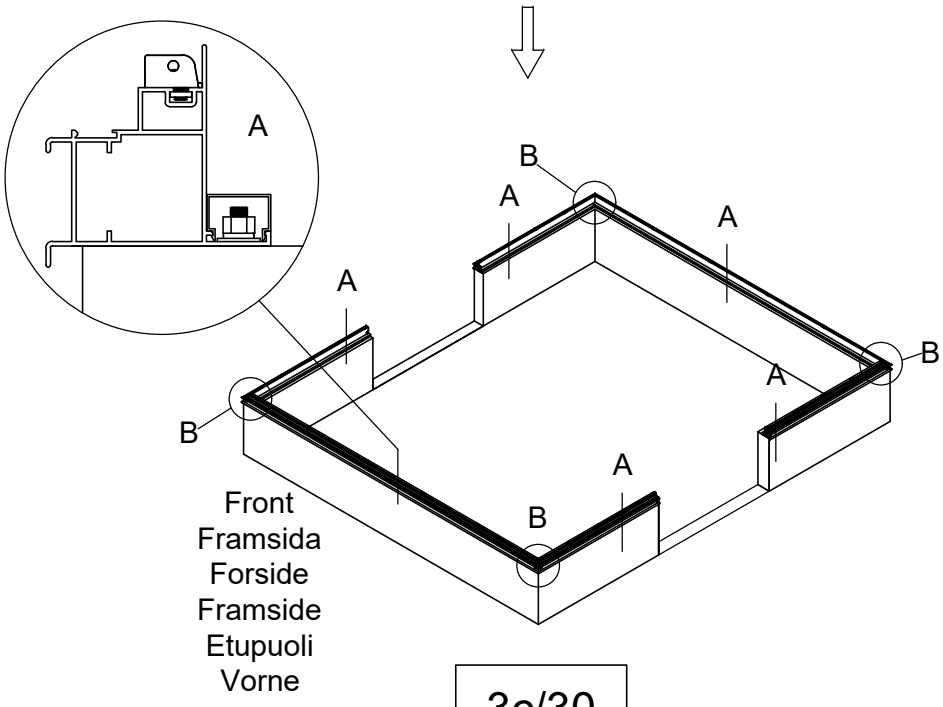

Part	NO.	QTY.	Length(MM)
	7B26-017	4	PCS
	M6-8	8	PCS
	J08	1	PCS

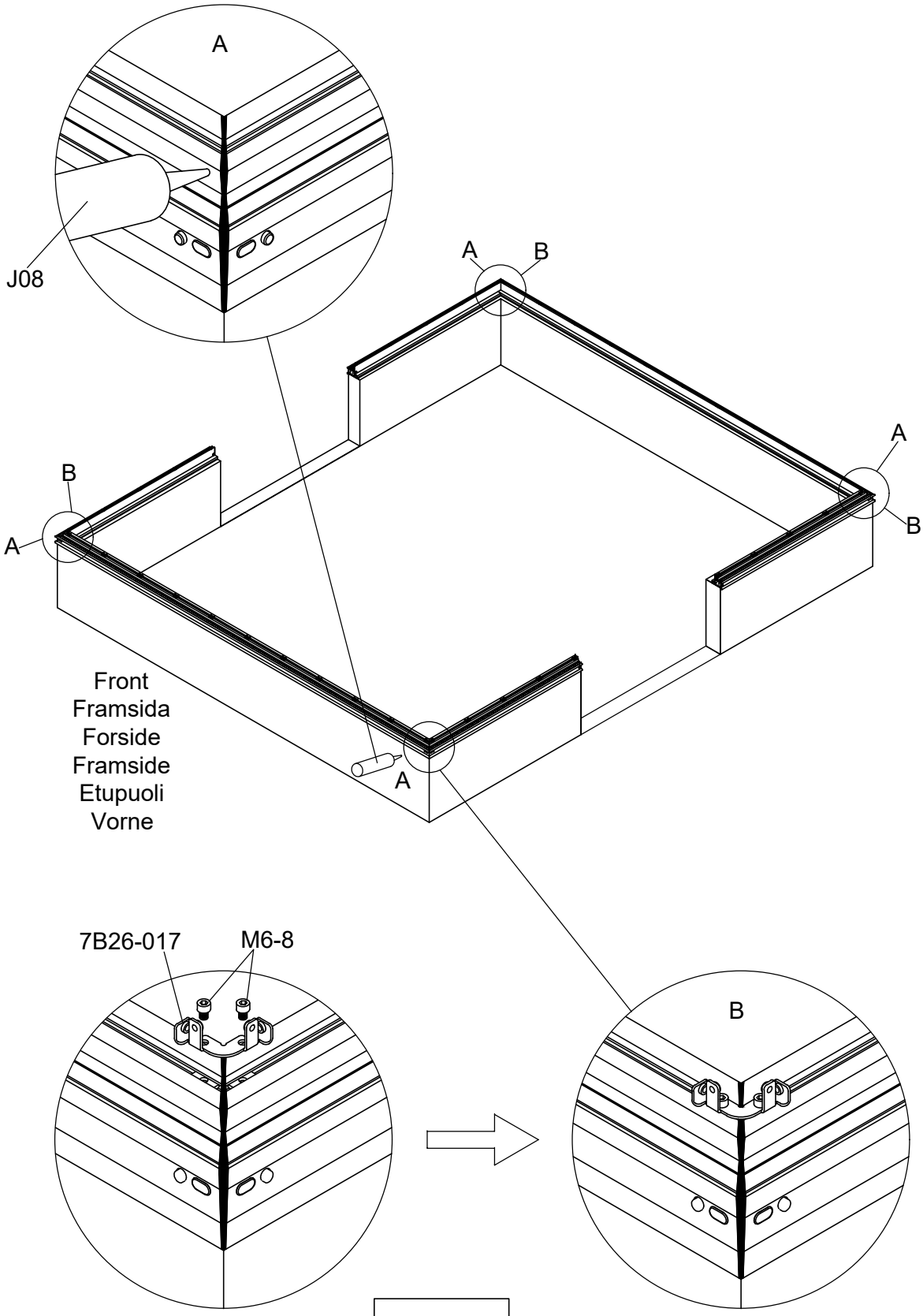

Part	NO.	QTY.	Length(MM)
	40A-Y20	4	1236
	Si6-16	8	PCS
	J05	8	PCS
	M6-8	8	PCS

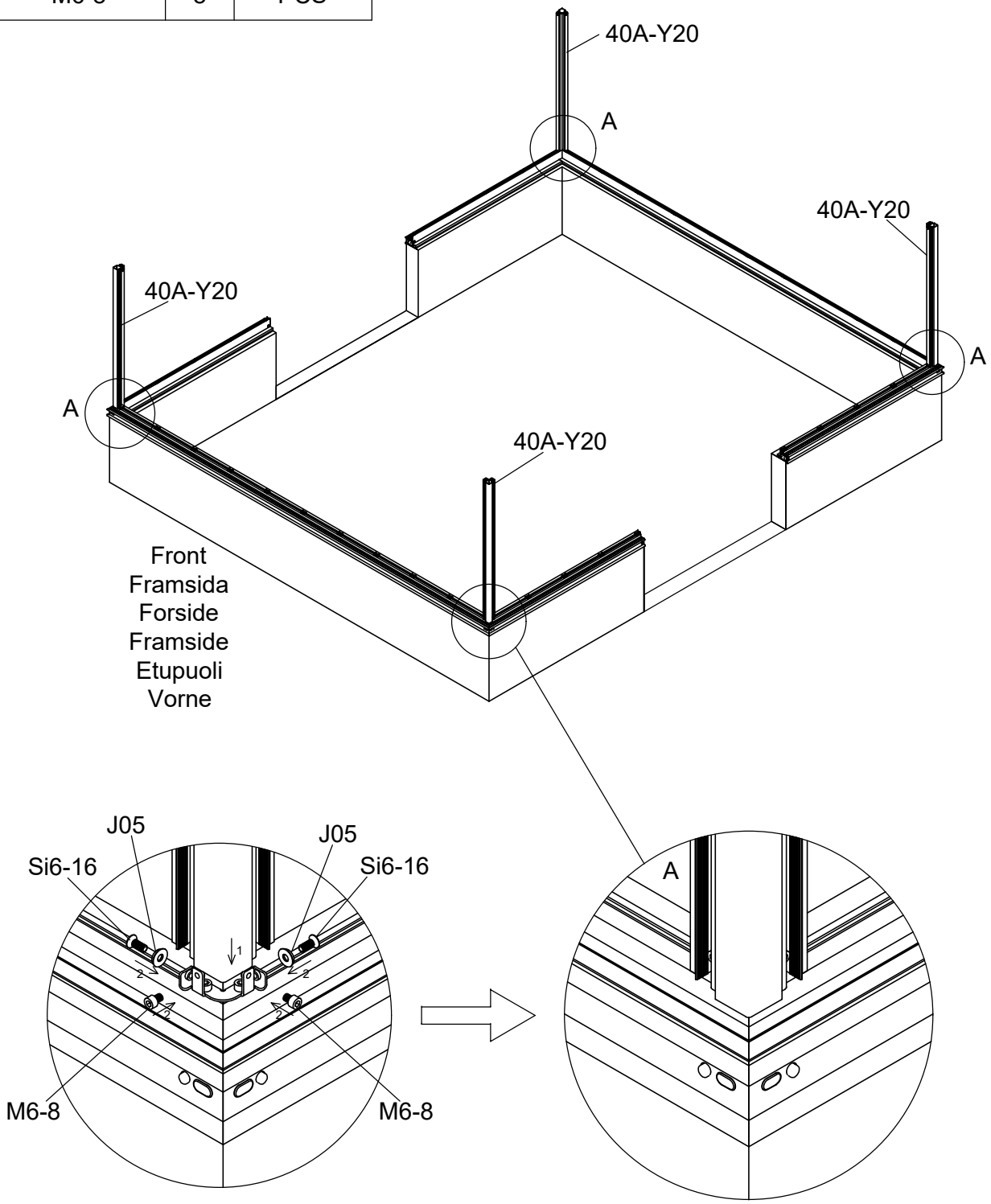

Part	NO.	QTY.	Length(MM)
	50X-Y60	1	3774

Part	NO.	QTY.	Length(MM)	CTN NO.
	Ma6-12	11	PCS	3149P-S
	7B26-011	11	PCS	3149P-S
	M6	11	PCS	3149P-S

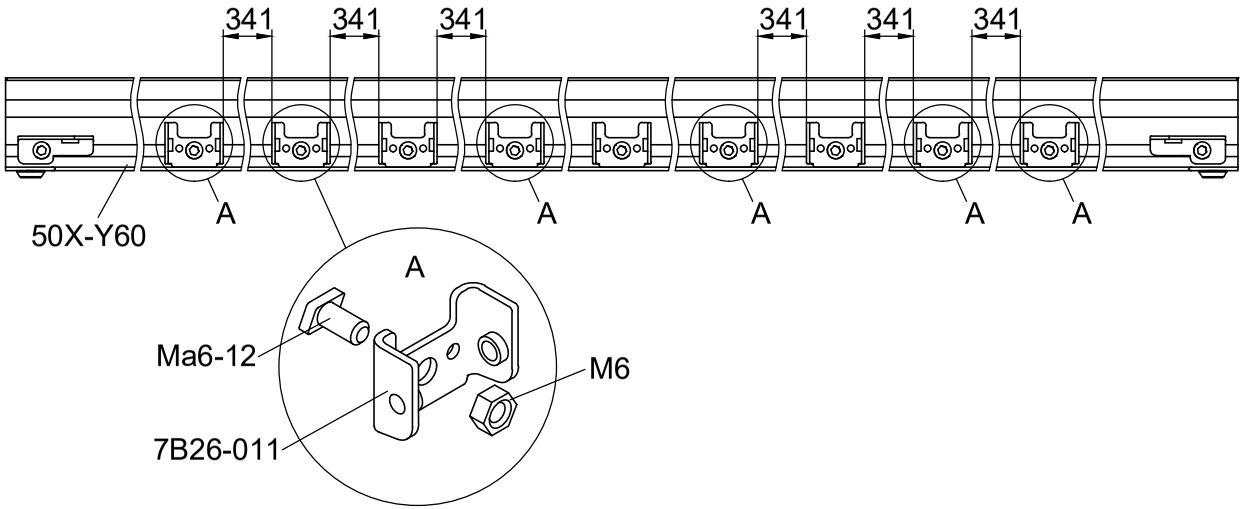

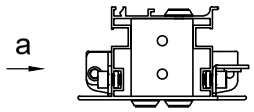

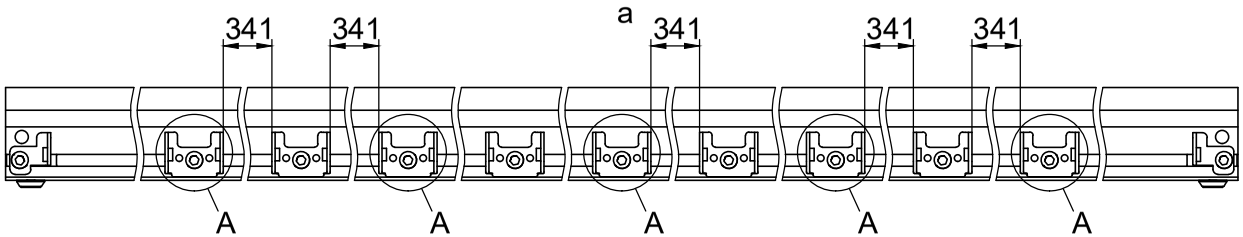

Part	Product	NO.	Length (MM)	QTY.	Code
	3055	40X-Y62-6NL	4634	1	A004
	3057	40A-Y62-8NL	6136		

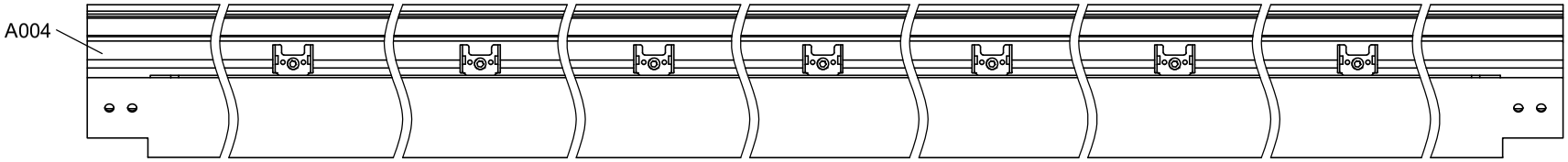

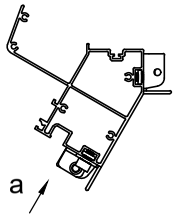

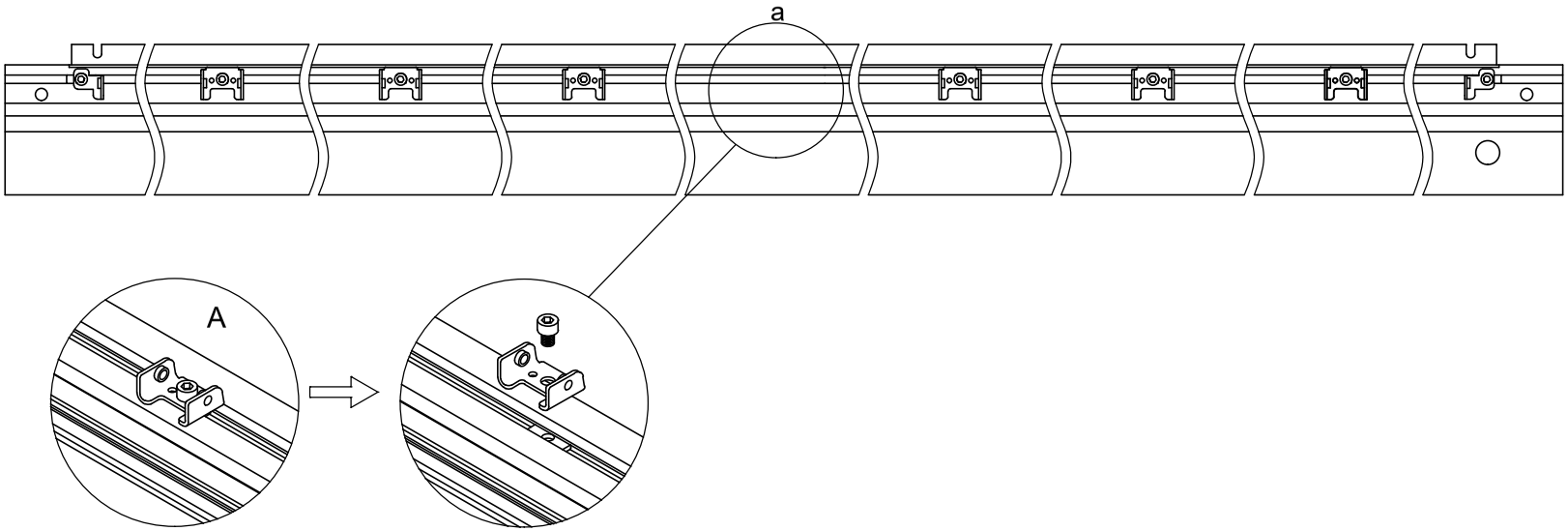

Disassemble this part.
Avmontera fästet från profilen på långsidan.
Afmonter beslaget fra profilen på langsiden.
Demonter festet fra profilen på langsiden.
Irrota profiilin pitkällä sivulla oleva kiinnike.
Demontieren Sie dieses Teil.

Part	NO.	QTY.	Length(MM)
	50X-Y61	1	3774

Part	NO.	QTY.	Length(MM)	CTN NO.
	Ma6-12	11	PCS	3149P-S
	7B26-011	11	PCS	3149P-S
	M6	11	PCS	3149P-S

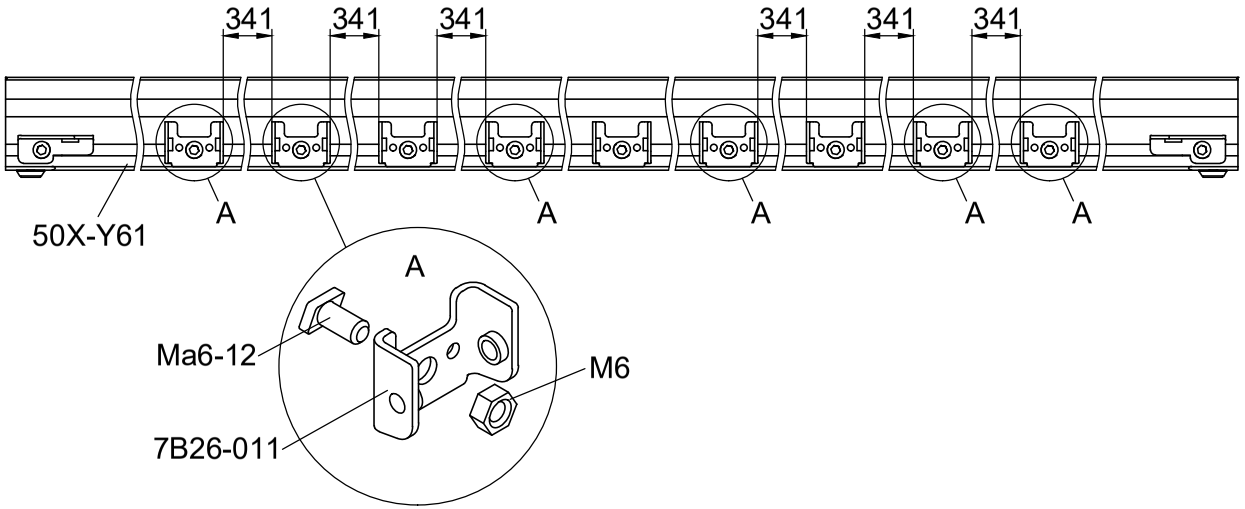

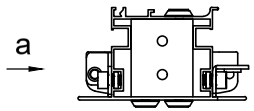

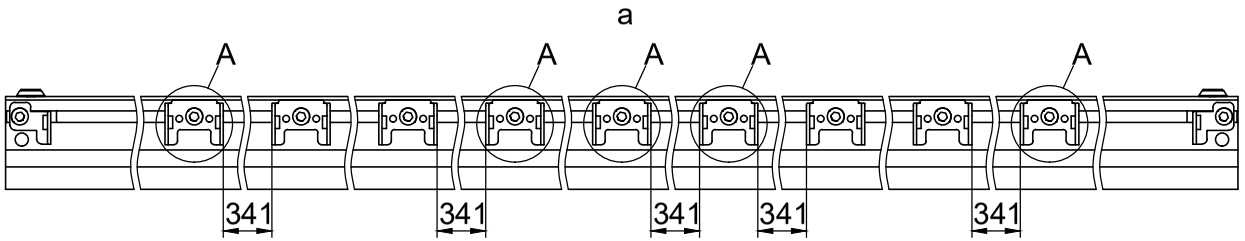

Part	NO.	QTY.	Length(MM)
	Si6-16	4	PCS
	J05	4	PCS
	L06	4	1400

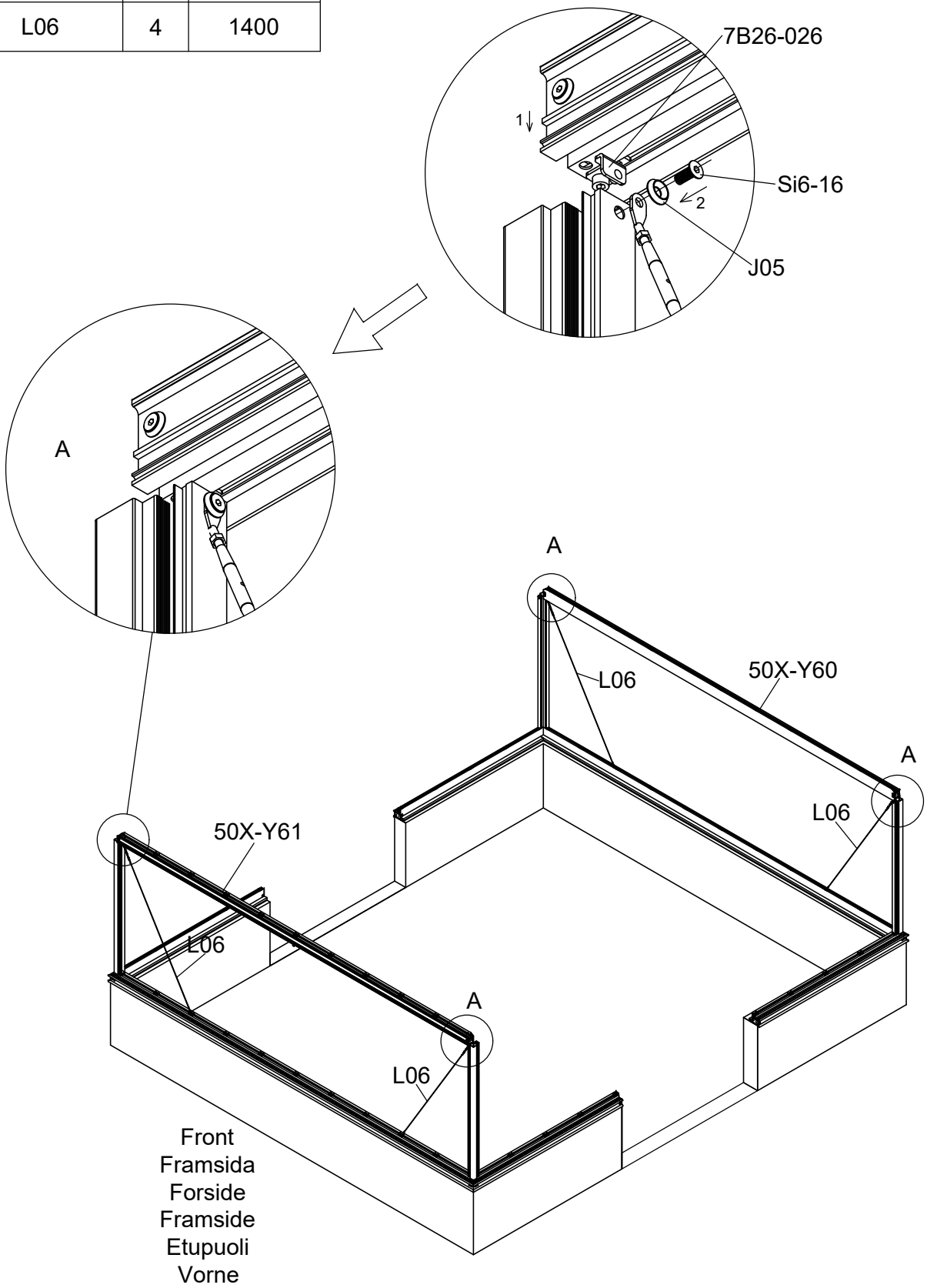

Part	Product	NO.	Length (MM)	QTY.	Code
	3054	40X-Y62-5NR	3883	1	A003
	3056	40X-Y62-7NR	5385		

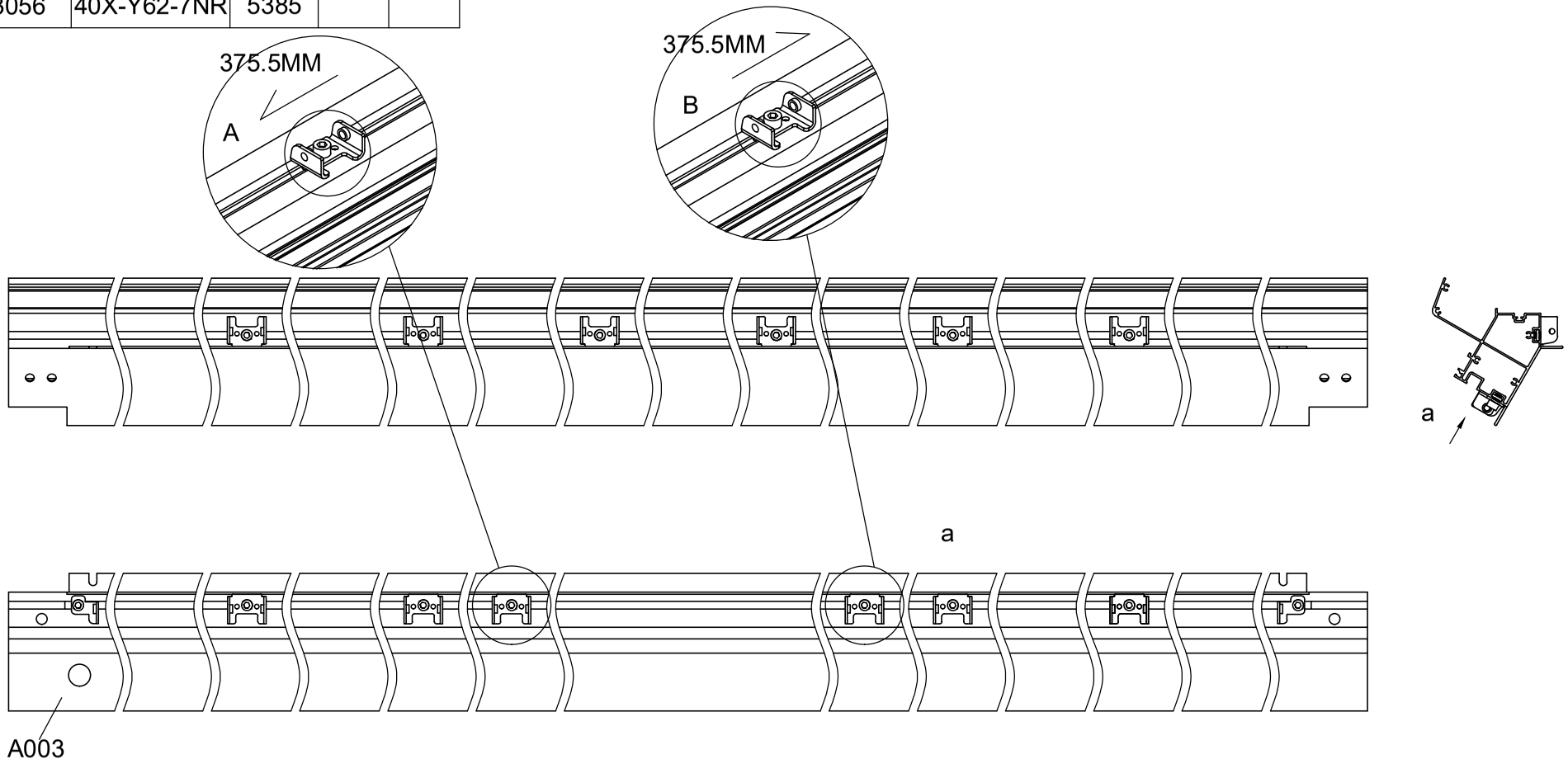

Part	Product	NO.	Length (MM)	QTY.	Code
	3055	40X-Y62-6NR	4634	1	A003
	3057	40X-Y62-8NR	6136		

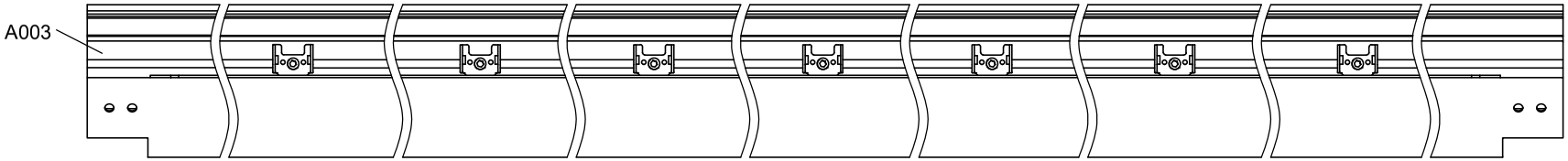

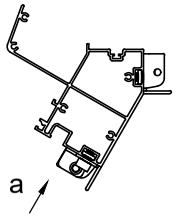

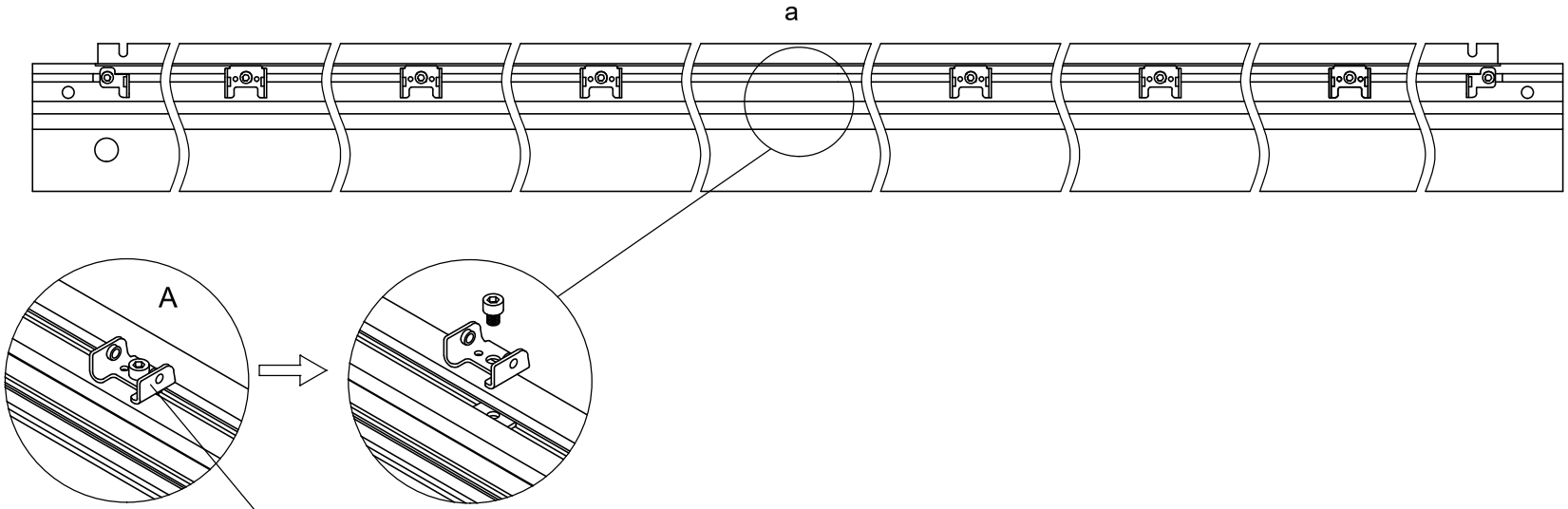

Disassemble this part.
Avmontera fästet från profilen på långsidan.
Afmonter beslaget fra profilen på langsiden.
Demonter festet fra profilen på langsiden.
Irrota profiilin pitkällä sivulla oleva kiinnike.
Demontieren Sie dieses Teil.

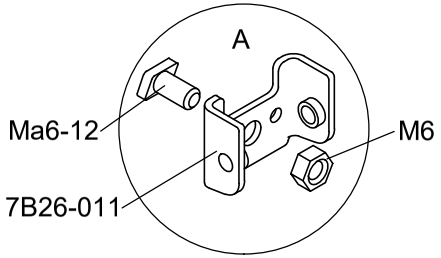

Part	NO.	QTY.								Length (MM)
		3054		3055		3056		3057		
		3140P-S	3140P-S-2	3140P-S	3140P-S-2	3140P-S	3140P-S-2	3140P-S	3140P-S-2	
	7B26-011	7	0	10	0	10	1	10	4	PCS
	Ma6-12	7	0	10	0	10	1	10	4	PCS
	M6	7	0	10	0	10	1	10	4	PCS

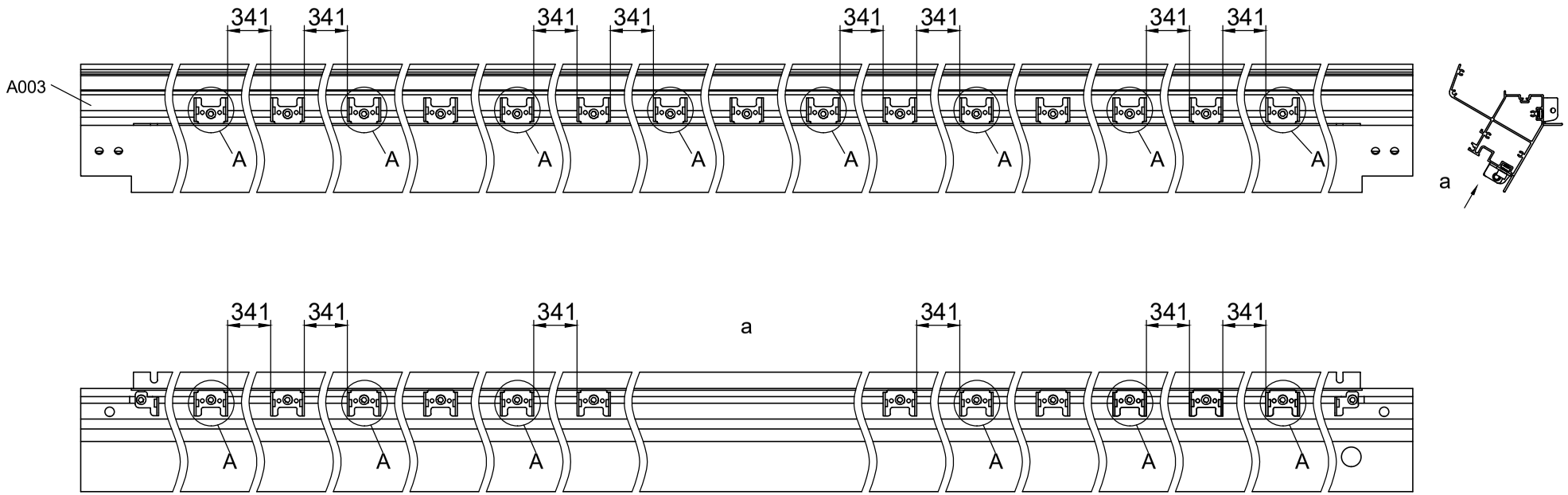

Part	Product	NO.	Length (MM)	QTY.	Code
	3054	40A-Y62-5NL	3883	1	A004
	3056	40A-Y62-7NL	5385		

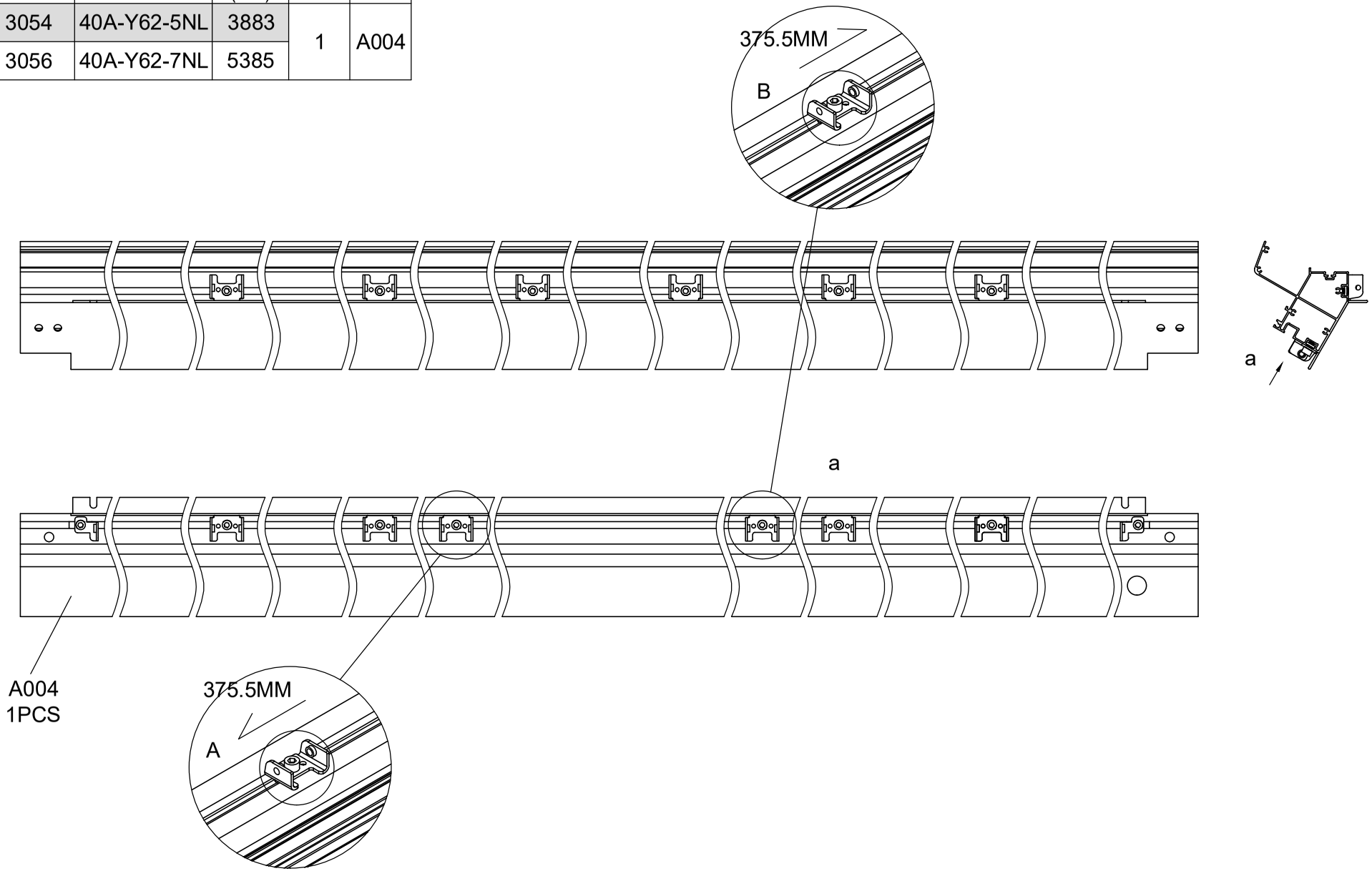

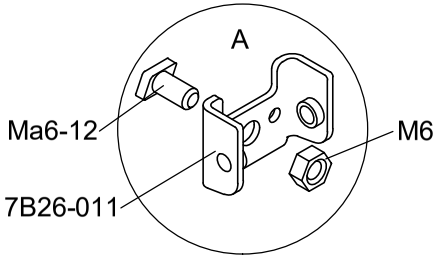

Part	NO.	QTY.								Length (MM)
		3054		3055		3056		3057		
		3140P-S	3140P -S-2	3140P-S	3140P -S-2	3140P-S	3140P -S-2	3140P-S	3140P -S-2	
	7B26-011	7	0	10	0	10	1	10	4	PCS
	Ma6-12	7	0	10	0	10	1	10	4	PCS
	M6	7	0	10	0	10	1	10	4	PCS

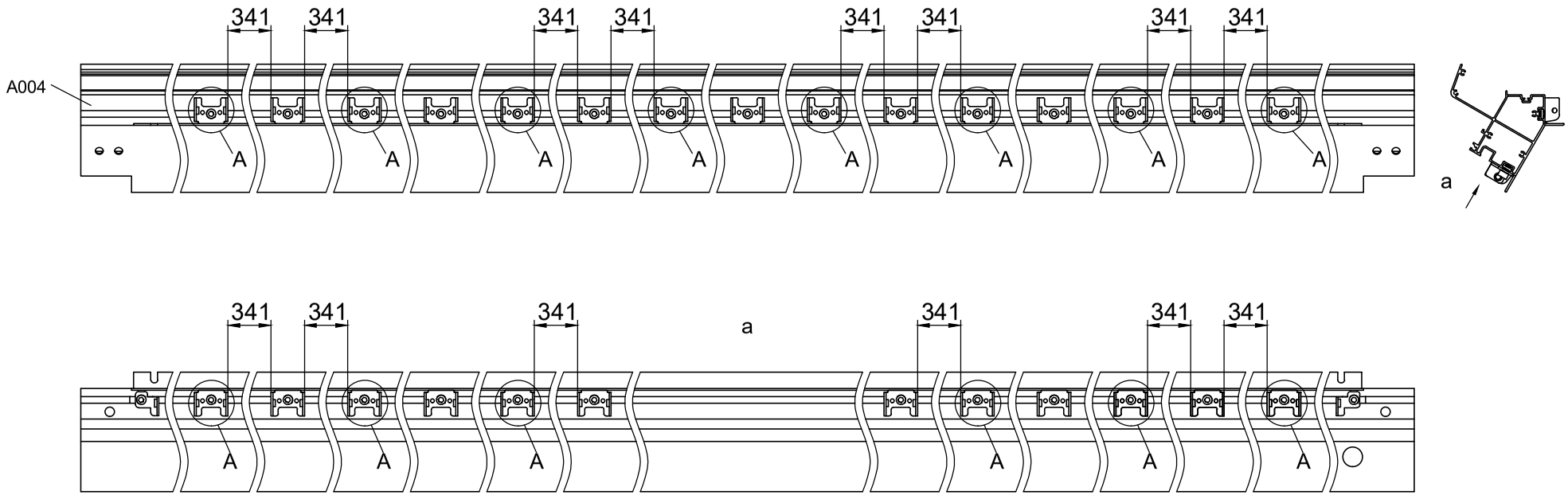

Part	NO.	QTY.	Length(MM)
	Si6-16	4	PCS
	J05	4	PCS
	L06	4	1400

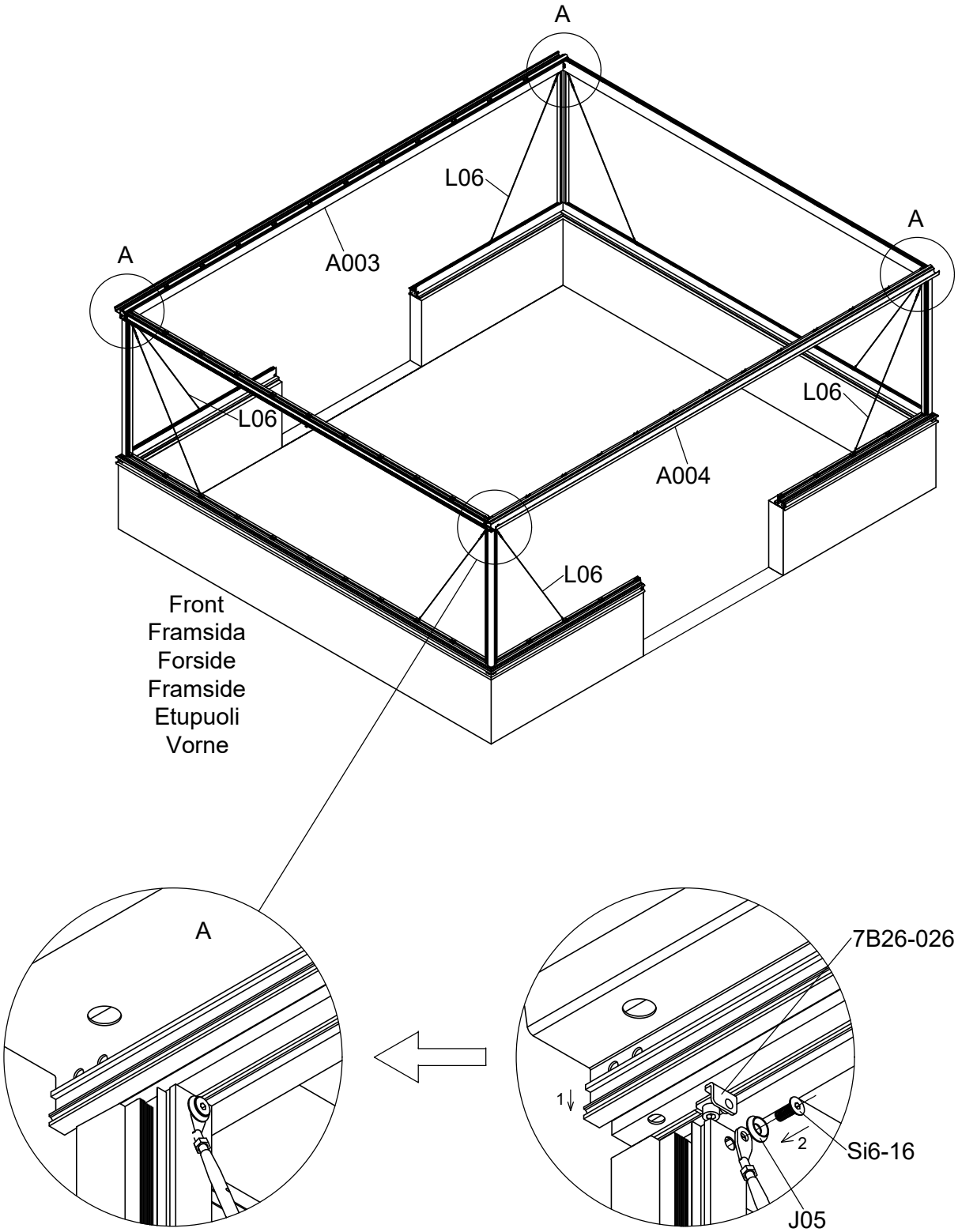

Part	NO.	QTY.	Length(MM)
	7B26-029	4	PCS
	M6-20	8	PCS

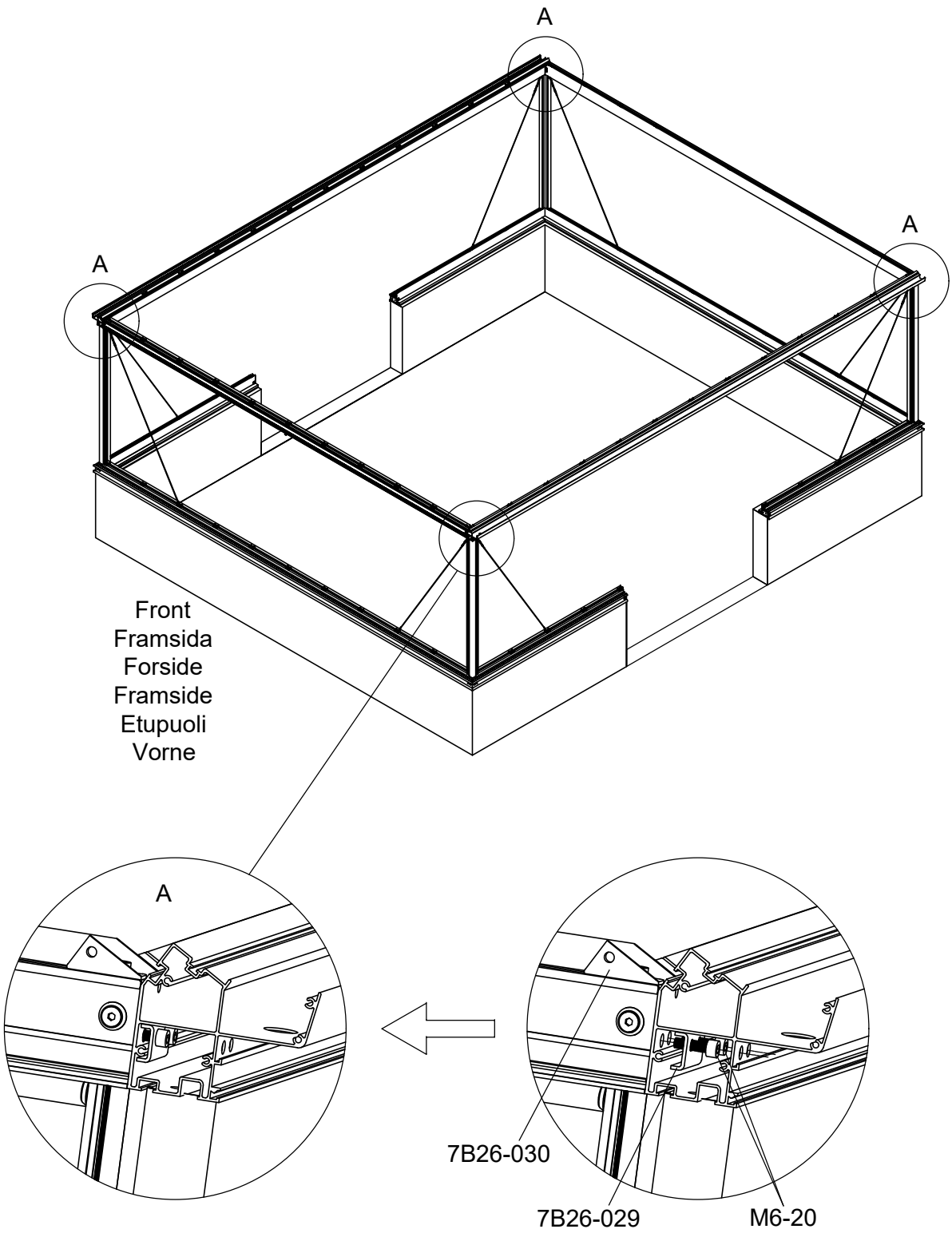

If you have chosen Side Windows, please assemble them from this step.
Please refer to the Side Window Instructions Page "7W1G-V3S 6/16 - 16/16".

Om du har valt sidofönster ska du montera dem från och med det här steget.
Se sidan med instruktioner för sidofönster "7W1G-V3S 6/16 - 16/16".

Hvis du har valgt sidevinduer, skal du montere dem fra dette trin og fremefter.
Se side 7W1G-V3S 6/16 - 16/16 i vejledningen til sidevinduer.

Hvis du har valgt Sidevinduer, vennligst sett dem sammen fra dette trinnet.
Vennligst se sidevindusinstruksjonene "7W1G-V3S 6/16 - 16/16".

Jos olet valinnut sivuikkunat, kokoa ne tästä vaiheesta alkaen.
Katso sivuikkunoiden ohjeet sivulta "7W1G-V3S 6/16 - 16/16".

Wenn Sie sich für Seitenfenster entschieden haben, montieren Sie diese bitte ab diesem Schritt.
Bitte beachten Sie die Anleitung für die Seitenfenster auf der Seite "7W1G-V3S 6/16 - 16/16".

Green Room®
BY WILLAB GARDEN

SH7W1G-V3S

If the Side Window is assembled on a new greenroom, please start with Page 6/16.
If the Side Window is added to an existing greenroom, please start with Page 1/16.

Vid montage på ett nytt Green Room, börja på sidan 6/16.
Vid eftermontage på ett befintligt Green Room börjar du på sidan 1/16.

Hvis sidevinduet monteres på et nyt Green Room, skal du starte på side 6/16.
Ved eftermontering på et eksisterende Green Room, skal du starte på side 1/16.

Hvis sidevinduet er montert på et nytt Green Room, start på side 6/16.
Ved ettermontering til et eksisterende Green Room, start på side 1/16.

Jos sivuikkuna asennetaan uuteen Green Room, aloita sivulta 6/16.
Jos sivuikkuna lisätään olemassa olevaan Green Room, aloita sivulta 1/16.

Wenn das Seitenfenster in einem neuen Green Room, montiert wird, beginnen Sie bitte mit Seite 6/16.
Wenn das Seitenfenster in einen bestehenden Green Room, eingebaut wird, beginnen Sie bitte mit Seite 1/16.

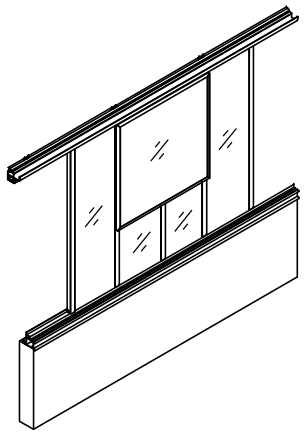

Part	NO.	QTY.	Length(MM)
	40A-Y30	8	1235
	Si6-16	16	PCS
	J05	16	PCS

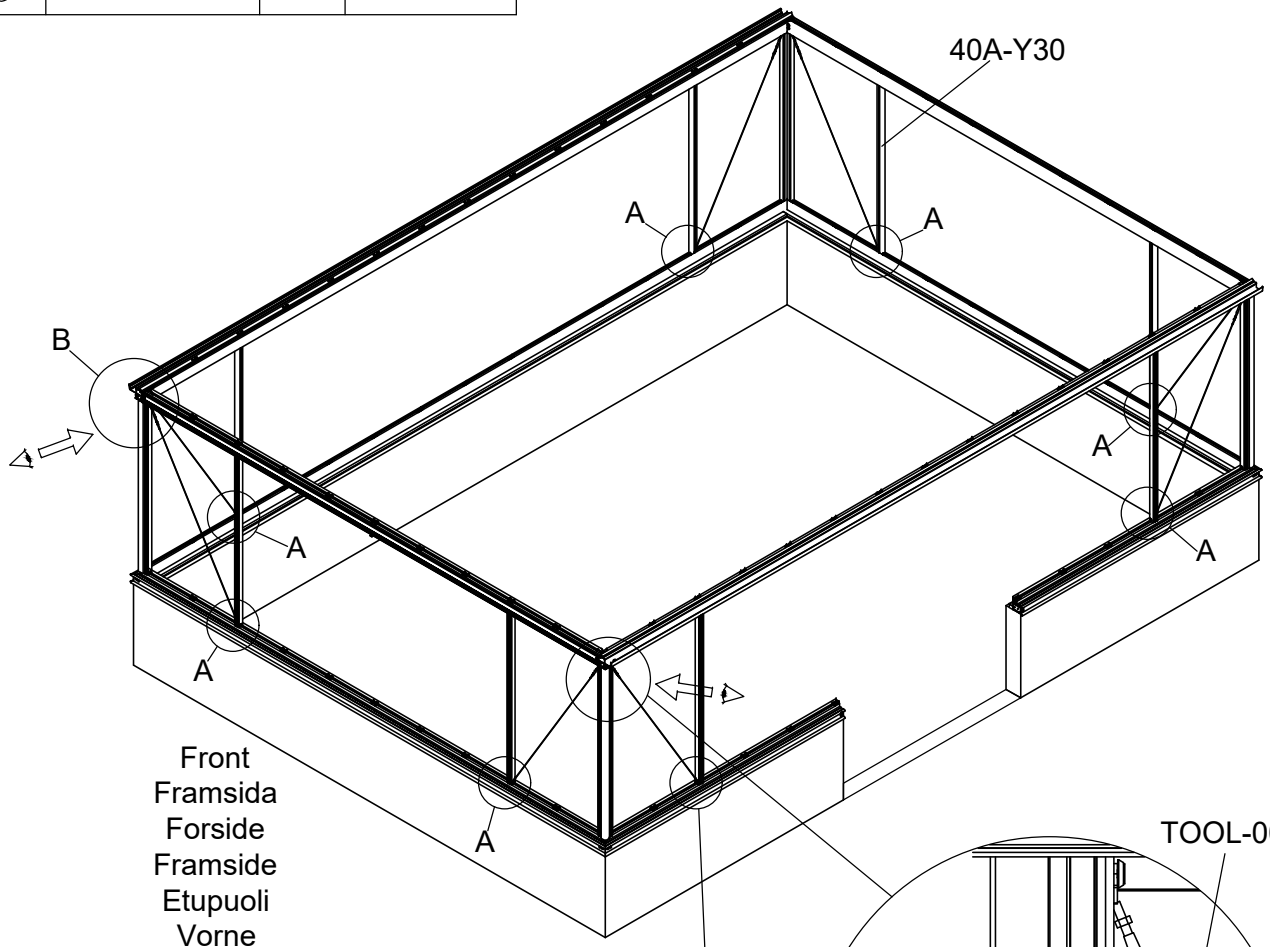

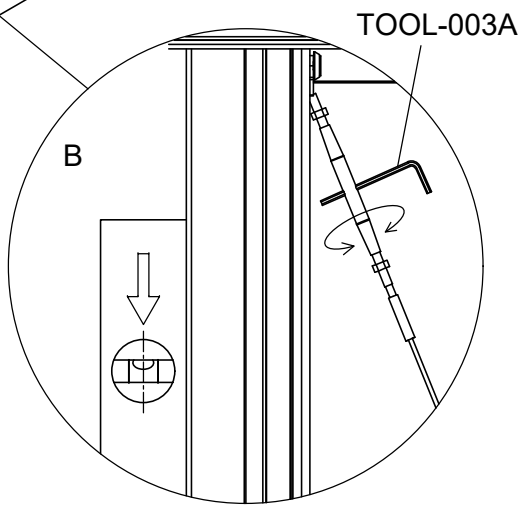

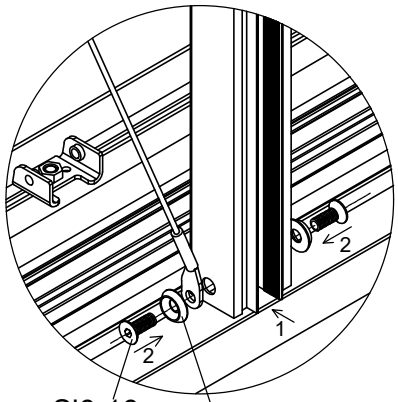

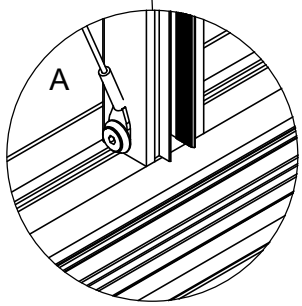

Part	NO.	QTY.												Length (MM)
		3054			3055			3056			3057			
		3054	3149P-S	3149P-S-2	3055	3149P-S	3149P-S-2	3056	3149P-S	3149P-S-2	3057	3149P-S	3149P-S-2	
	40A-Y30	8	14	0	8	17	1	12	17	1	12	17	5	1235
	Si6-16	40	56	0	40	68	4	56	68	4	56	68	20	PCS
	J05	40	56	0	40	68	4	56	68	4	56	68	20	PCS

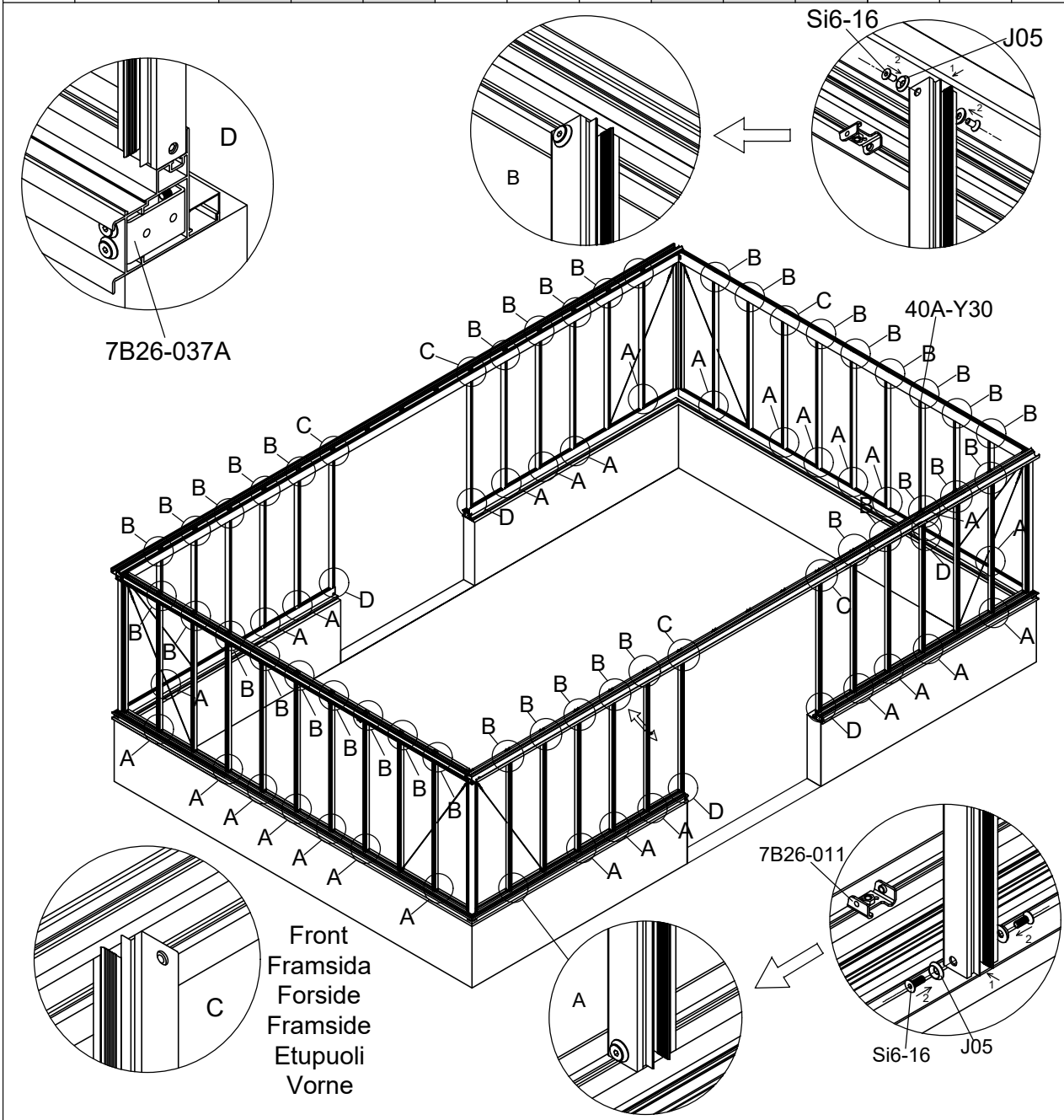

3054	3055	3056	3057
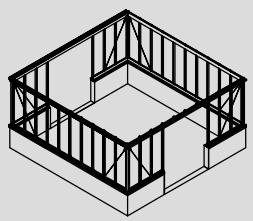	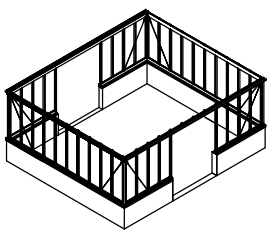	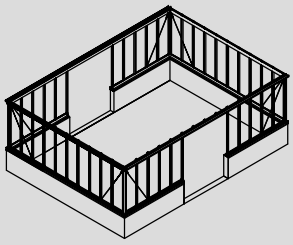	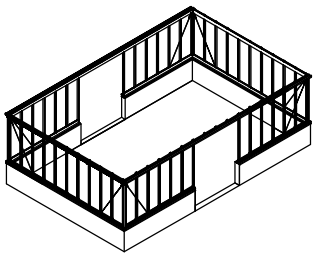

Part	NO.	QTY.	Length(MM)
	50X-Y31R	2	633
	50X-Y31L	2	633
	50X-Y32	2	1075
	Si6-16	12	PCS
	J05	12	PCS

Part	NO.	QTY.	Length(MM)	CTN NO.
	50X-Y31A-R	2	851	3149P-S
	50X-Y31A-L	2	851	3149P-S
	40X-Y31R	2	418	3149P-S
	40X-Y31L	2	418	3149P-S
	40X-Y31A-R	2	201	3149P-S
	40X-Y31A-L	2	201	3149P-S
	Si6-16	24	PCS	3149P-S
	J05	24	PCS	3149P-S

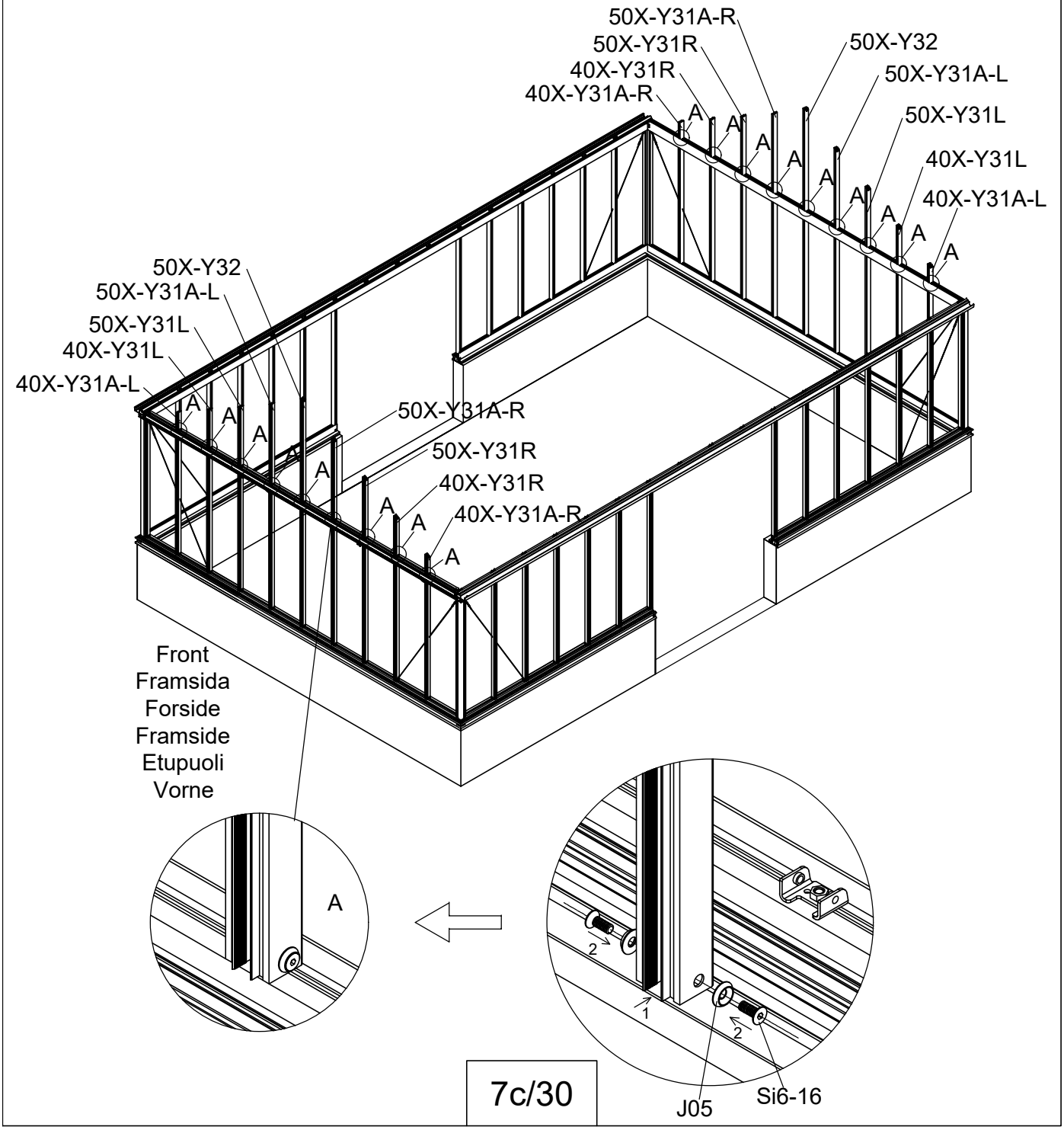

Part	Product	NO.	Length (MM)	QTY.	Code
	3054	40X-Y63-5	3869	1	A005
	3055	40X-Y63-6	4620		
	3056	40X-Y63-7	5371		
	3057	40X-Y63-8	6122		

Part	NO.	QTY.								Length (MM)
		3054		3055		3056		3057		
		3149P -S	3149P -S-2	3149P -S	3149P -S-2	3149P -S	3149P -S-2	3149P -S	3149P -S-2	
	7B26-011	6	0	6	2	6	2	6	4	PCS
	Ma6-12	6	0	6	2	6	2	6	4	PCS
	M6	6	0	6	2	6	2	6	4	PCS

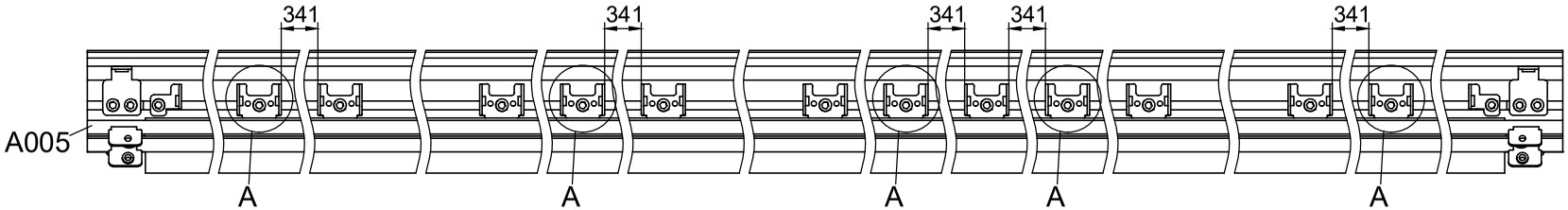

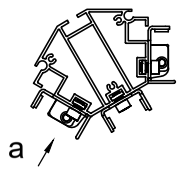

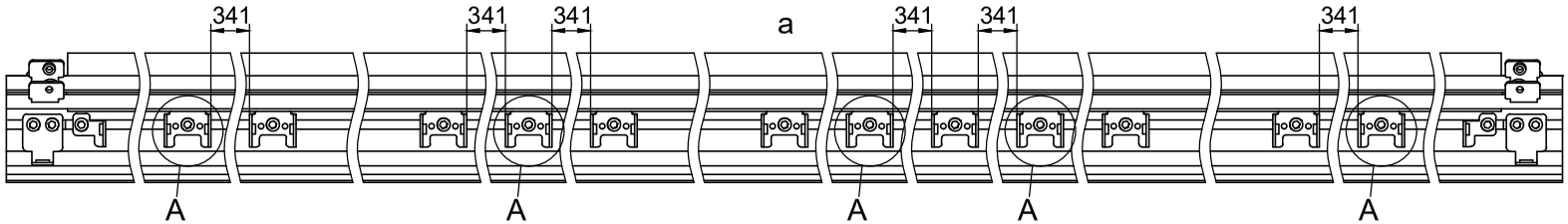

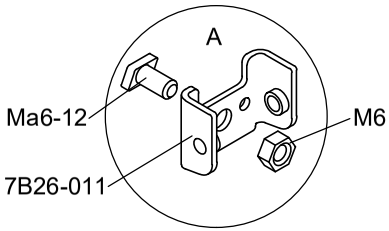

Part	NO.	QTY.	Length(MM)
	M6-8	4	PCS

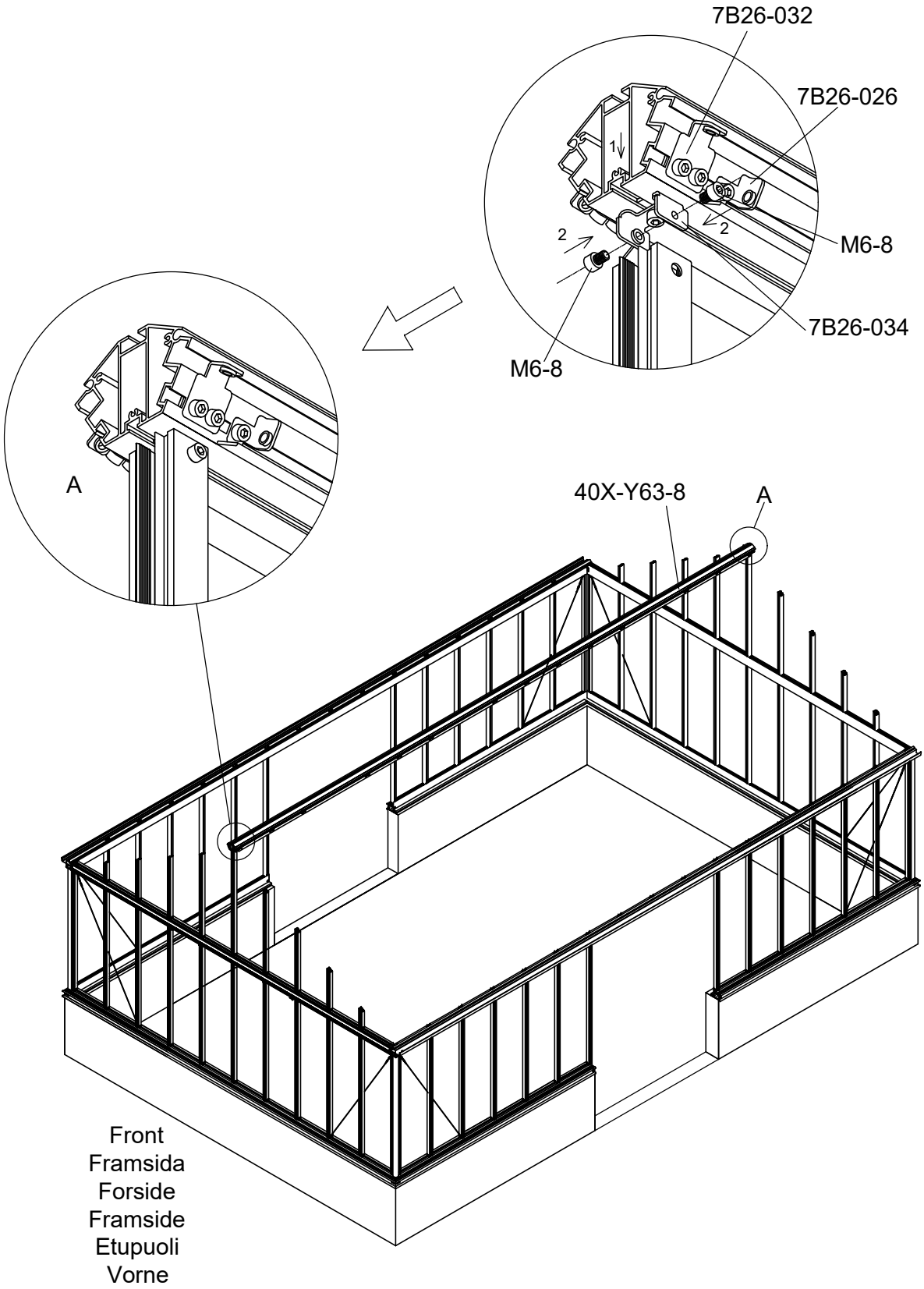

Part	NO.	QTY.				Length (MM)	Code
		3054	3055	3056	3057		
	L04	4	4	0	0	2580	A019
	L25	0	0	4	4	3073	

Part	NO.	QTY.	Length(MM)	CTN NO.
	S6-10	48	PCS	3149P-S

Part	NO.	QTY.	Length(MM)
	50X-Y21	2	2189
	50X-Y22	2	2189
	Si6-16	8	PCS
	J05	8	PCS
	S6-10	16	PCS
	7B26-033	4	PCS

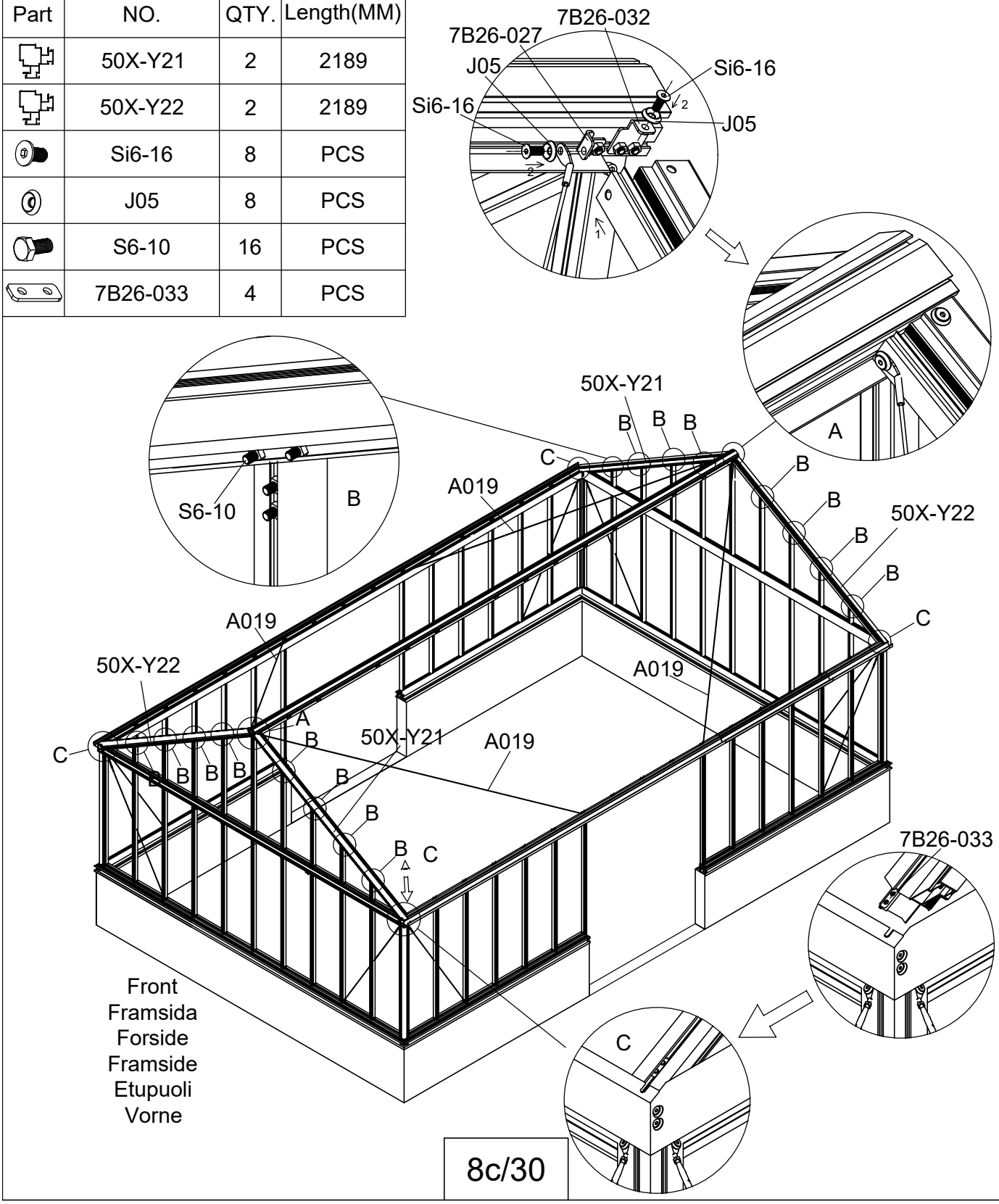

Part	NO.	QTY.	Length(MM)
	7B26-005	4	PCS
	Mi6	16	PCS
	J05	4	PCS
	Si6-12	4	PCS
	M6-8	4	PCS

Part	NO.	QTY.	Length(MM)	CTN NO.
	7B26-005	12	PCS	3149P-S
	Mi6	48	PCS	3149P-S

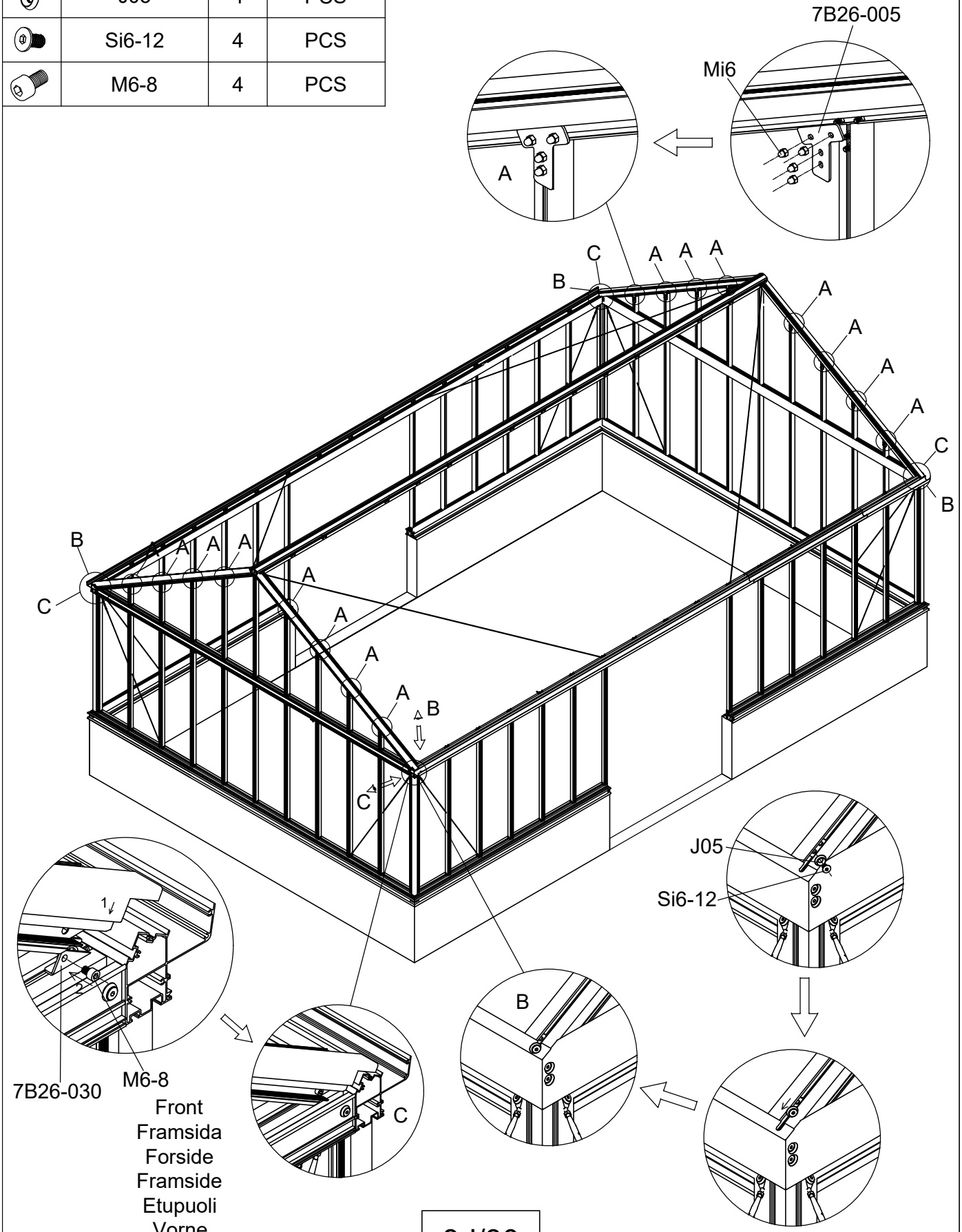

Part	NO.	QTY.						Length (MM)	Code
		3054			3055				
		3054	3149P-S	3149P-S-2	3055	3149P-S	3149P-S-2		
	50X-Y33R	4	0	0	4	0	0	2150	A015
	50X-Y33L	4	0	0	4	0	0	2150	A016
	Si5-16	16	8	0	16	8	0	PCS	
	J01	16	8	0	16	8	0	PCS	
	40X-Y34C	0	4	0	0	4	0	713	
	50X-Y33-C	0	4	0	0	4	0	1273	

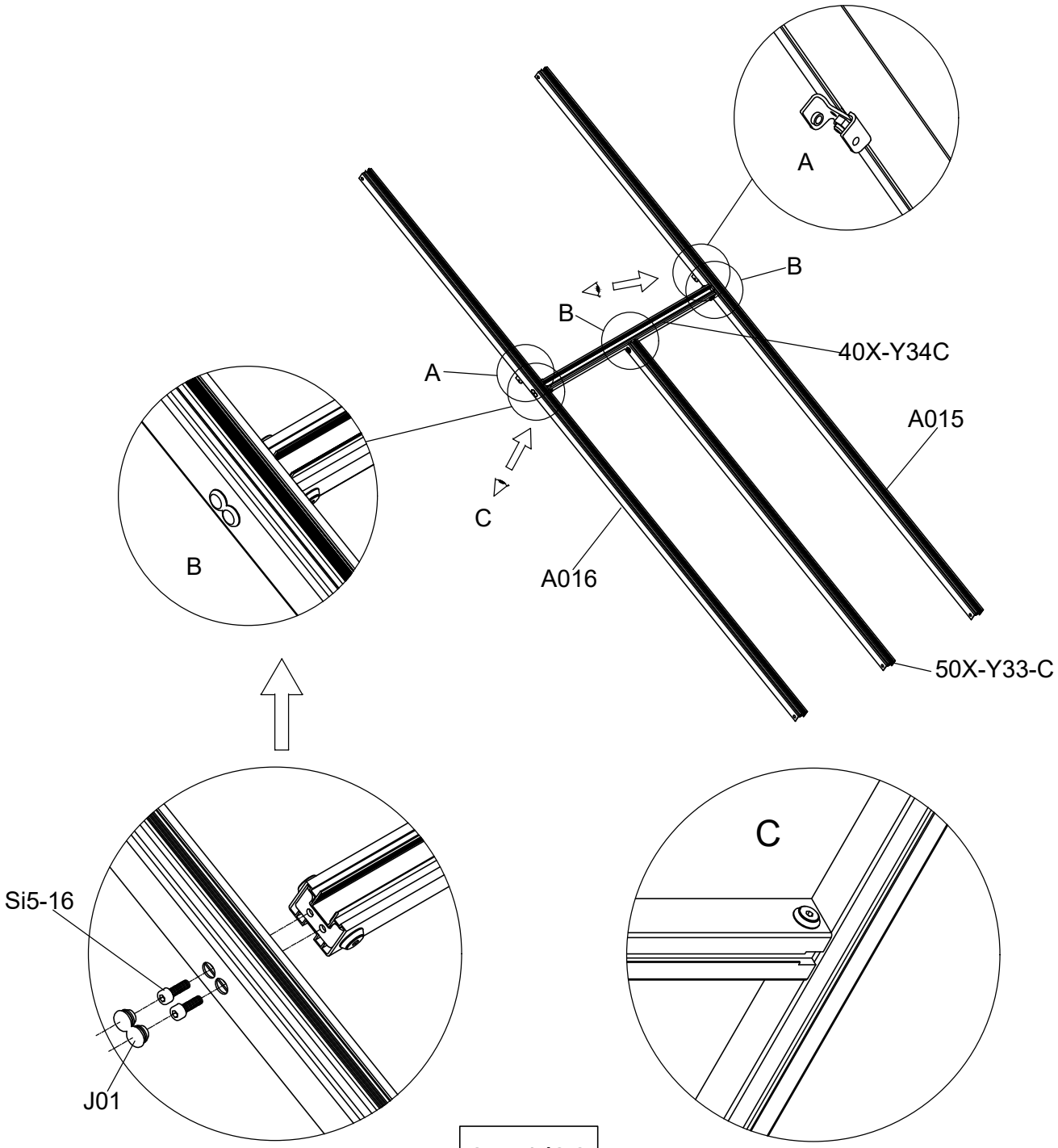

Part	NO.	QTY.						Length (MM)	Code
		3056			3057				
		3056	3149P-S	3149P-S-2	3057	3149P-S	3149P-S-2		
	50X-Y33HR	6	0	0	6	0	0	2150	A015
	50X-Y33HL	6	0	0	6	0	0	2150	A016
	Si5-16	24	8	4	24	8	4	PCS	
	J01	24	8	4	24	8	4	PCS	
	40X-Y34C	0	4	2	0	4	2	713	
	50X-Y33-C	0	4	2	0	4	2	1273	

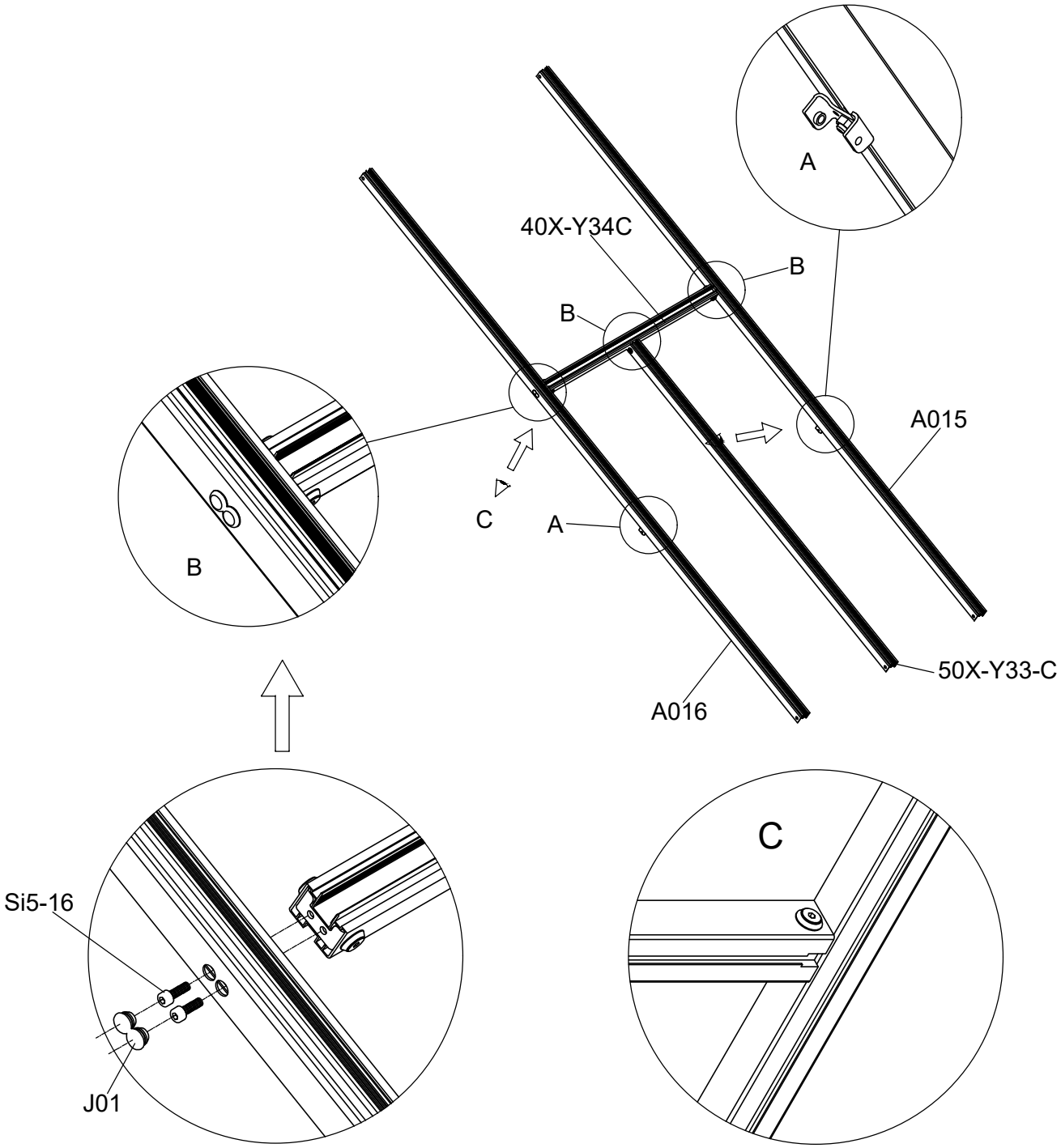

Part	NO.	QTY.												Length (MM)	Code
		3054			3055			3056			3057				
		3054	3149P -S	3149P -S-2	3055	3149P -S	3149P -S-2	3056	3149P -S	3149P -S-2	3057	3149P -S	3149P -S-2		
	50X-Y33-A	0	0	0	2	0	0	0	0	0	0	0	0	2190	A017
	50X-Y33H-A	0	0	0	0	0	0	0	0	0	2	0	0	2190	
	50X-Y33-B	0	6	0	0	6	2	0	6	2	0	6	4	2150	

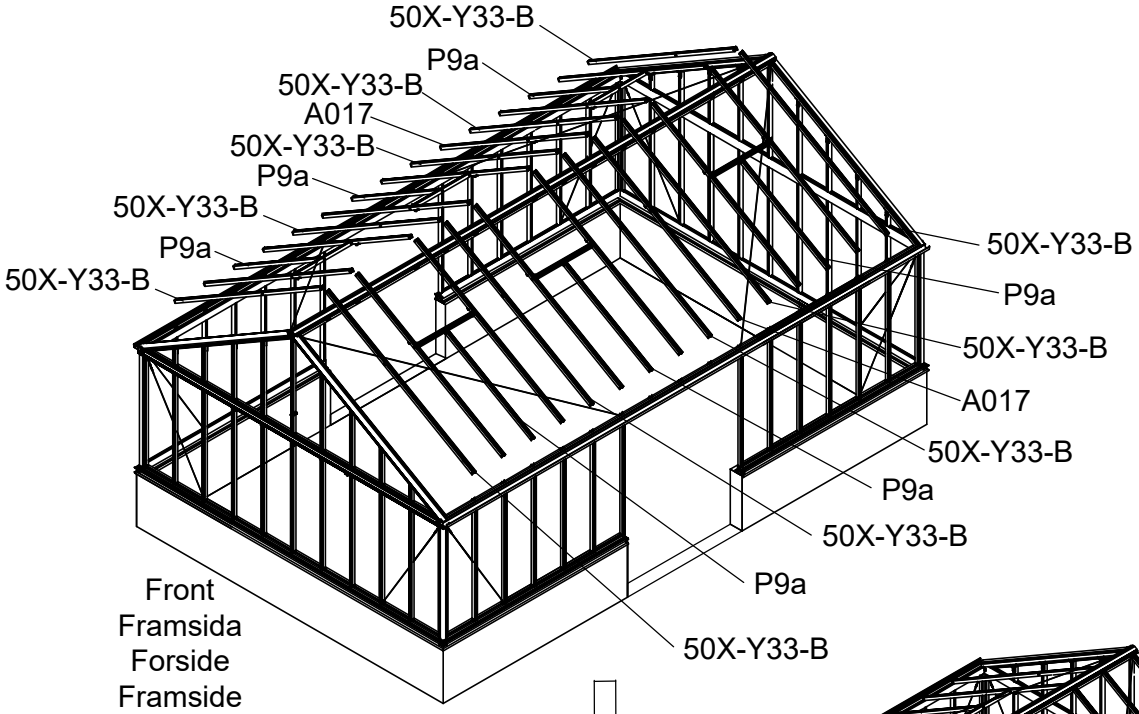

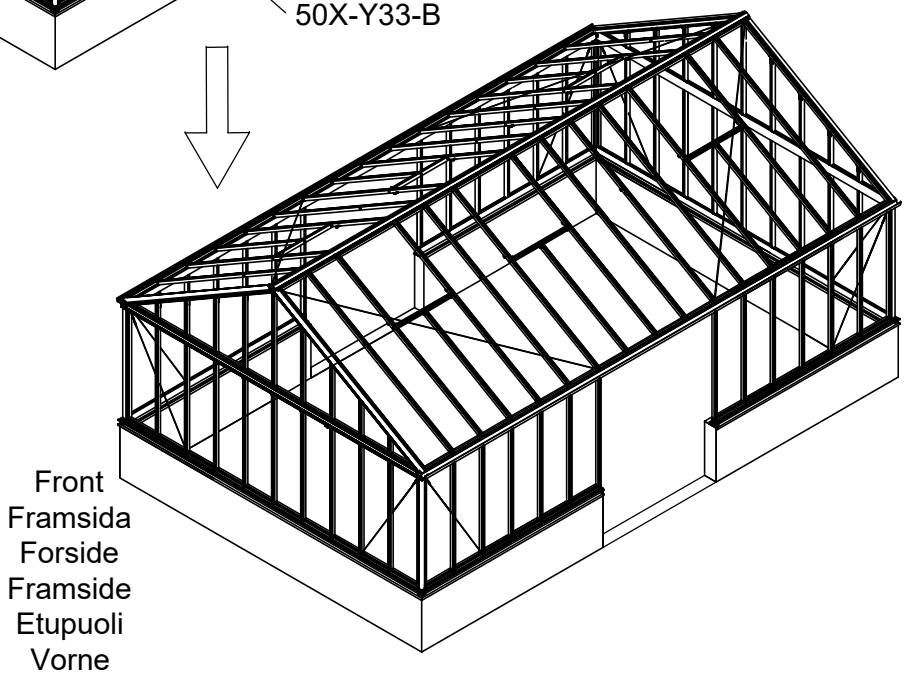

3054	3055	3056	3057
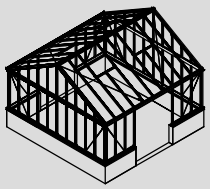	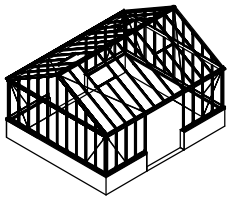	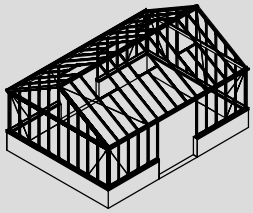	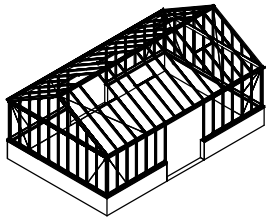

Part	NO.	QTY.												Length (MM)
		3054			3055			3056			3057			
		3054	3149P -S	3149P -S-2	3055	3149P -S	3149P -S-2	3056	3149P -S	3149P -S-2	3057	3149P -S	3149P -S-2	
	Si6-16	32	32	0	40	32	8	48	32	12	56	32	20	PCS
	J05	32	32	0	40	32	8	48	32	12	56	32	20	PCS

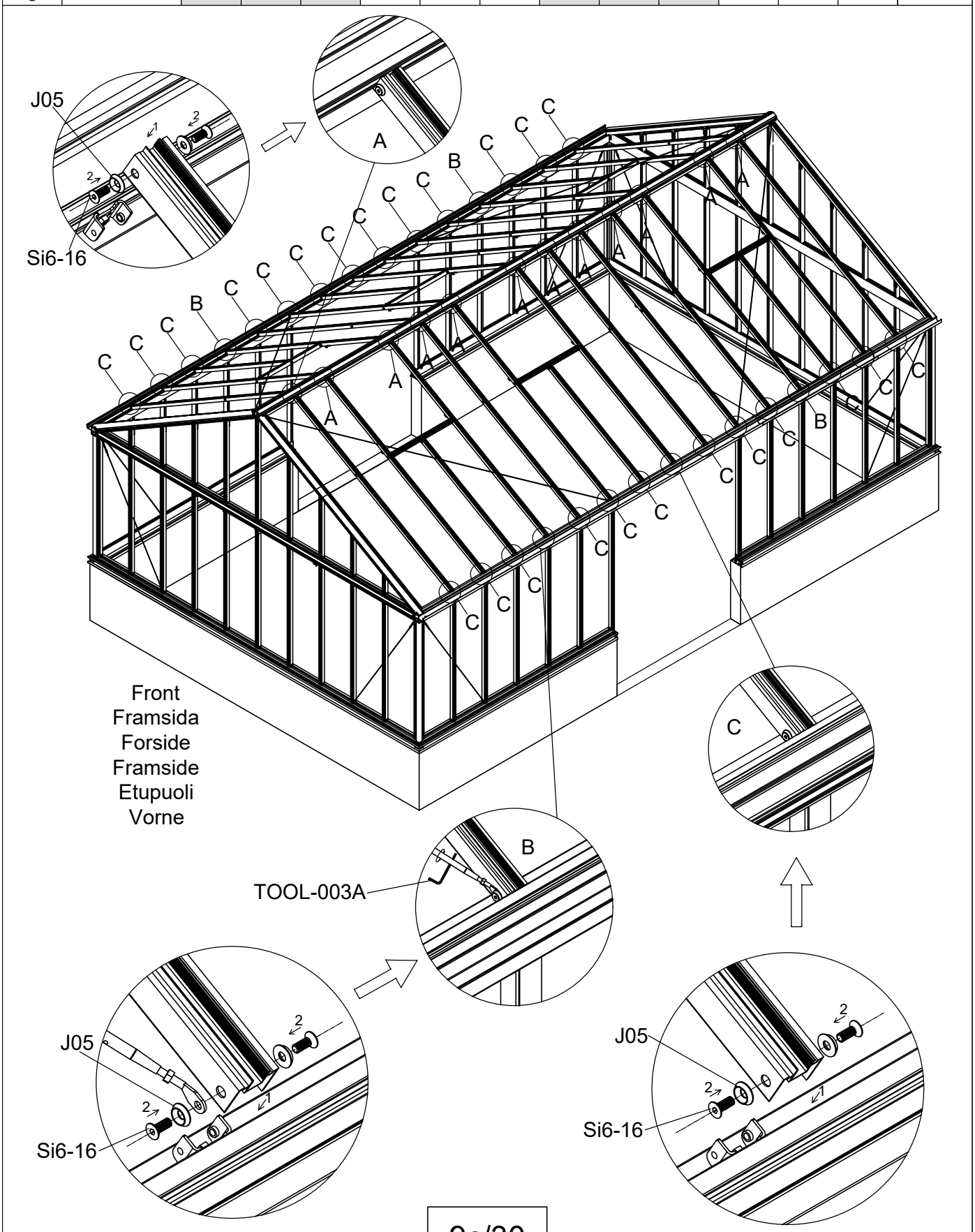

Part	NO.	QTY.		Length(MM)	Code
		3054	3055		
	50X-Y35	4	5	1500	A018
	Si6-16	16	20	PCS	
	J05	16	20	PCS	

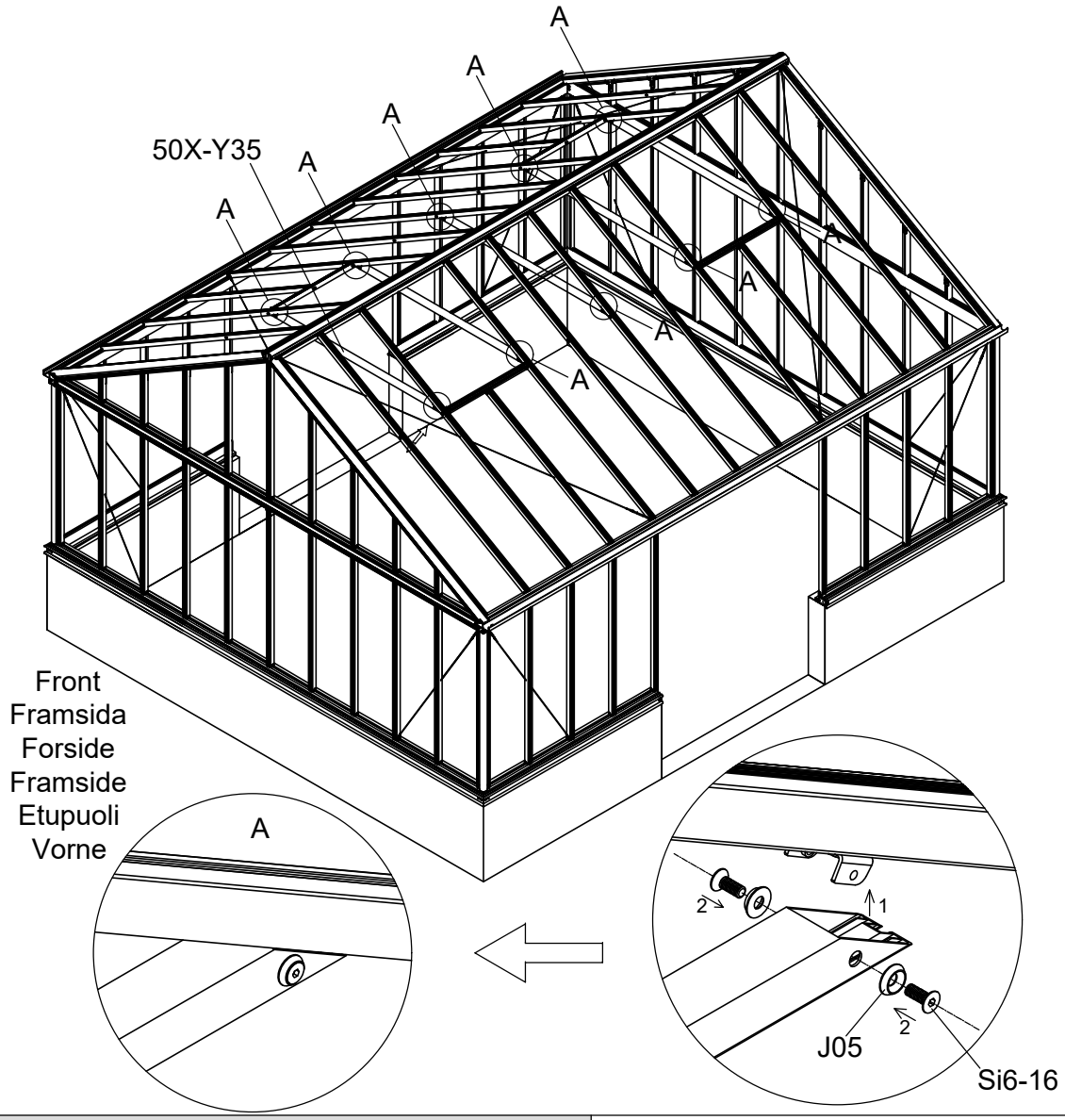

3054	3055
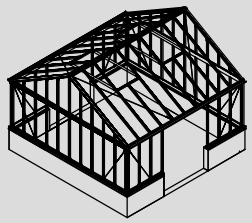	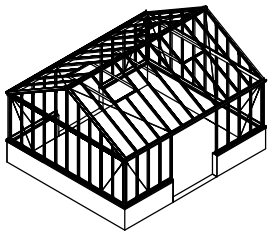

Part	NO.	QTY.		Length(MM)	Code
		3056	3057		
	50X-Y35-2460	6	7	2460	A018
	Si6-16	24	28	PCS	
	J05	24	28	PCS	

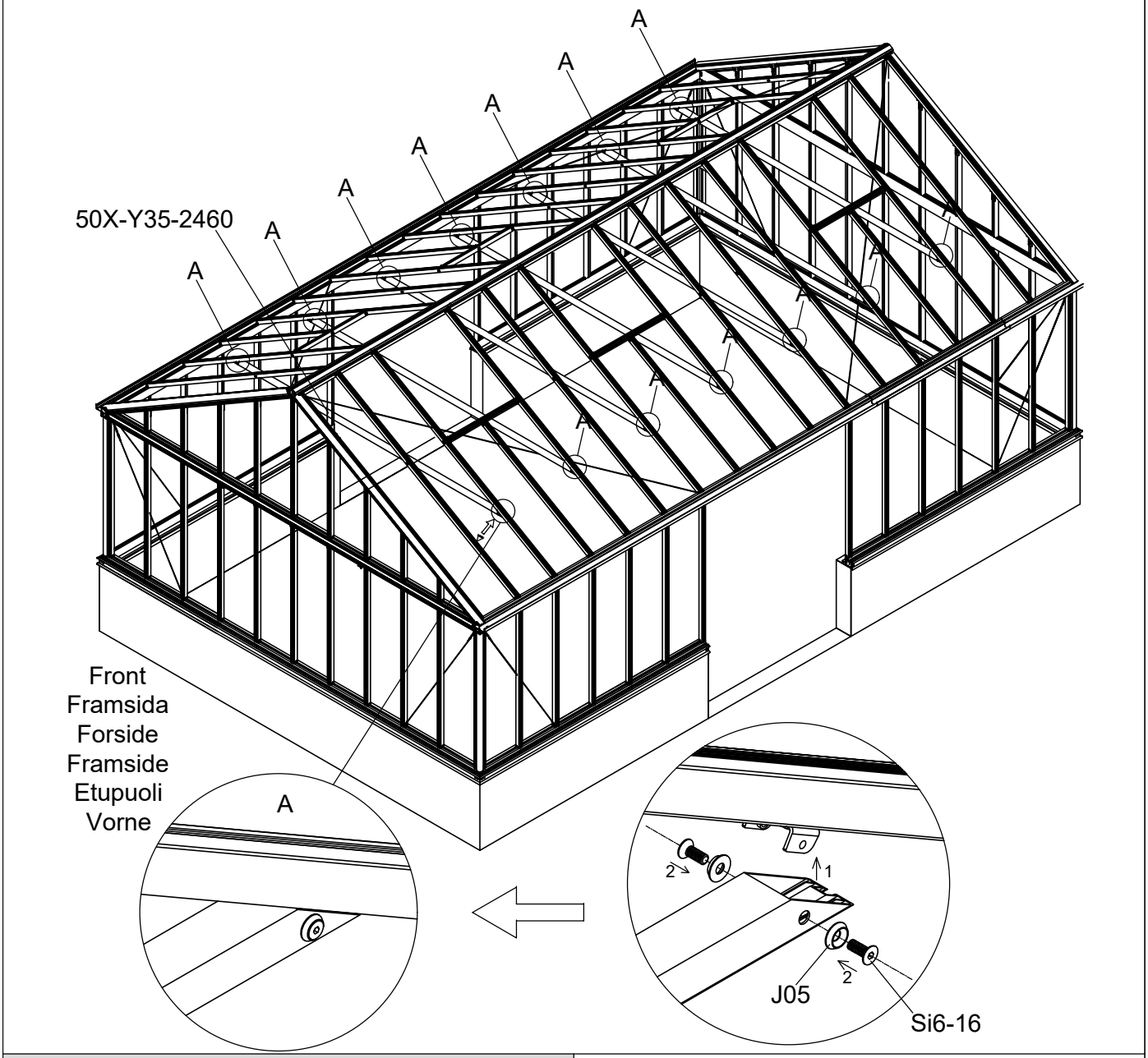

3056	3057
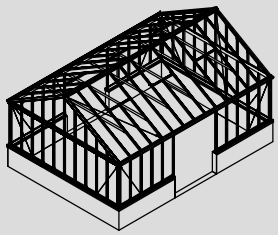	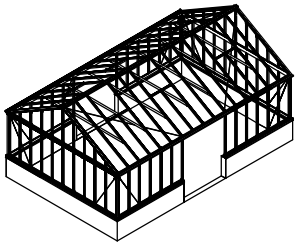

Part	NO.	QTY.	Length(MM)	CTN NO.
	40A-Y101L	2	1910	3040P-HD
	40A-Y101R	2	1910	3040P-HD
	7C26-031	4	PCS	3040P-HD
	Si6-25	16	PCS	3040P-HD
	J05	16	PCS	3040P-HD
	PSJ8-60	4	PCS	3040P-HD
	DQ6-12	4	PCS	3040P-HD
	SW6-50	4	PCS	3040P-HD

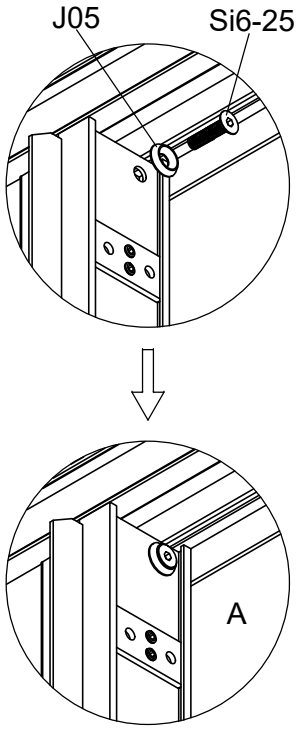

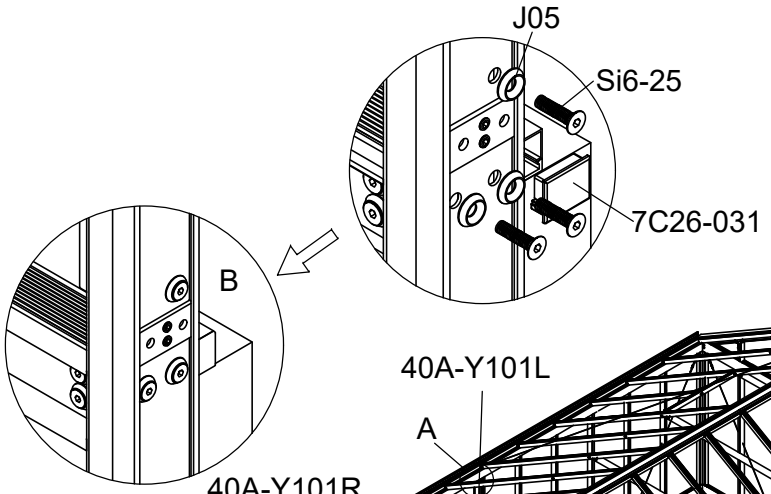

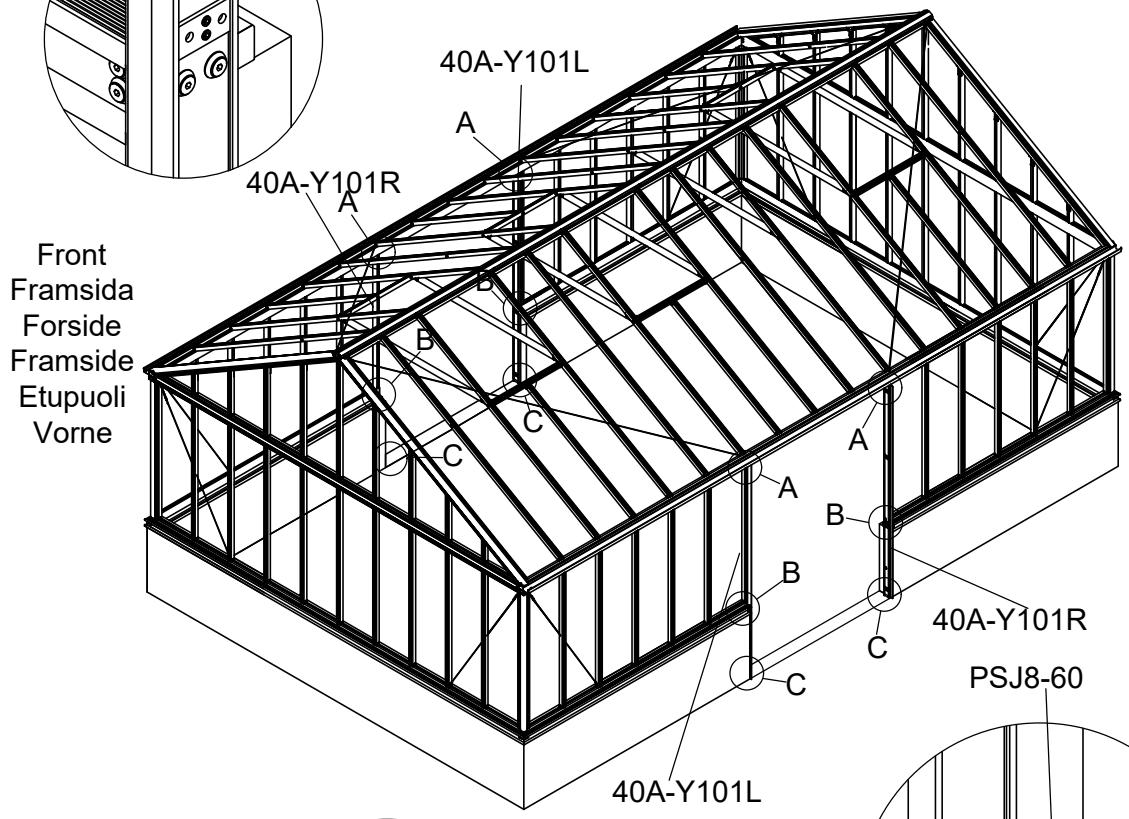

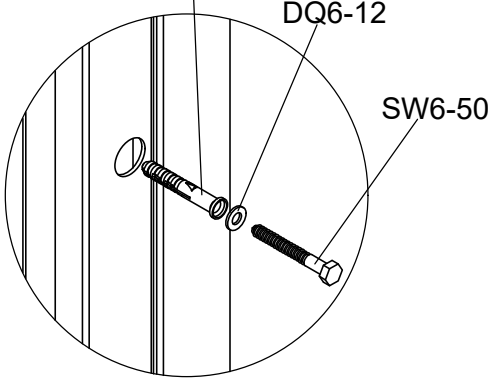

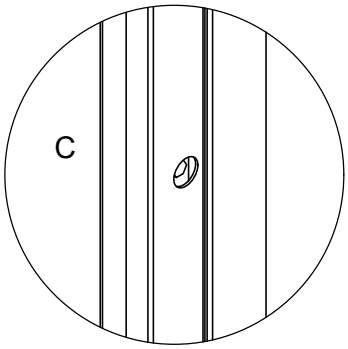

Part	NO.	QTY.				Length(MM)
		3054	3055	3056	3057	
	354×1262	16	18	20	22	1262

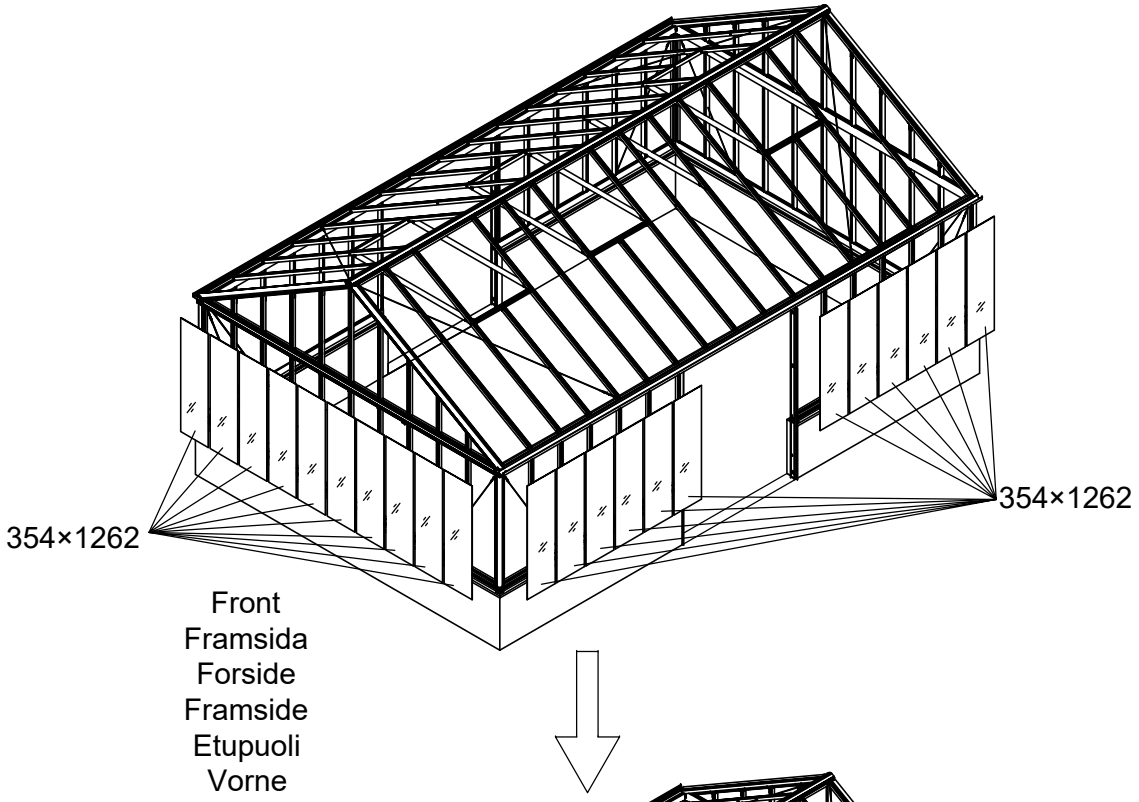

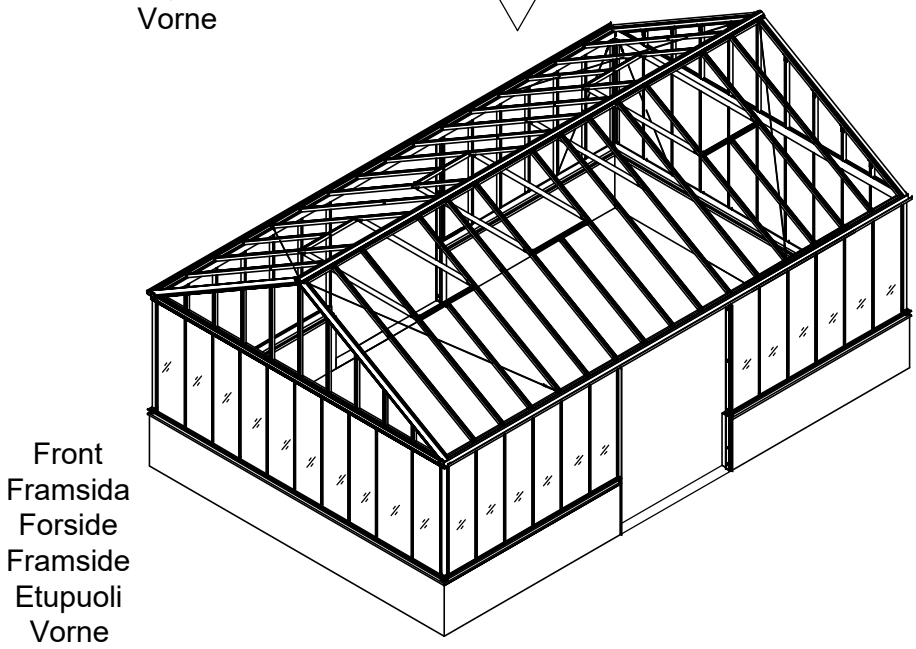

3054	3055	3056	3057
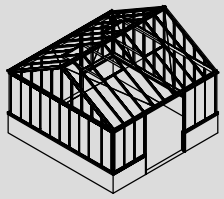	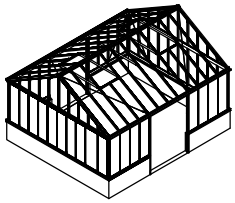	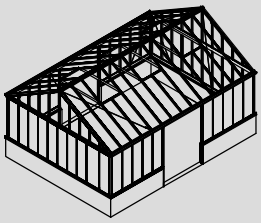	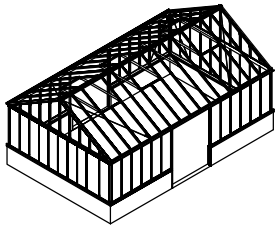

Part	NO.	QTY.				Length(MM)
		3054	3055	3056	3057	
	354×1262	16	18	20	22	1262

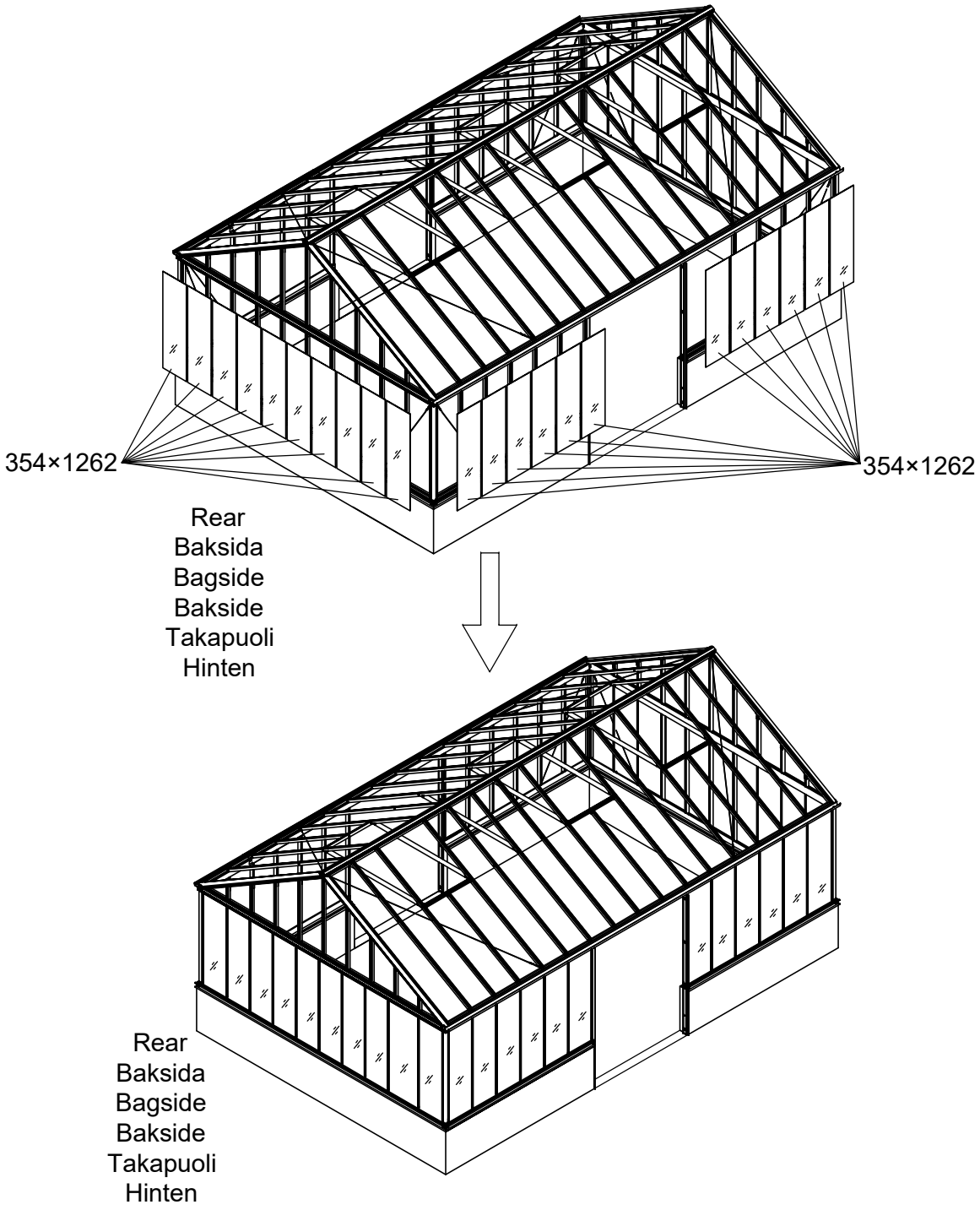

3054	3055	3056	3057
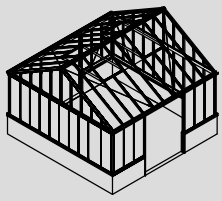	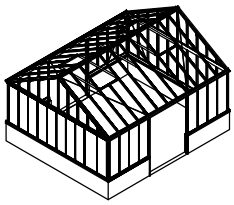	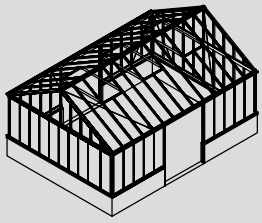	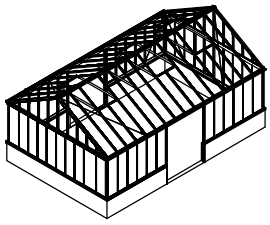

Part	Product	NO.	Length (MM)	QTY.	CTN NO.	Code
	3054	50A-Y15-R	1218	2	3043PA-S-5	A012
	3055	40A-S15-6R	1593	2	3043PA-S-6	
	3056	40A-S15-7R	1969	2	3043PA-S-7	
	3057	40A-S15-8R	2344	2	3043PA-S-8	
	3054	50A-Y15-L	1218	2	3043PA-S-5	A013
	3055	40A-S15-6L	1593	2	3043PA-S-6	
	3056	40A-S15-7L	1969	2	3043PA-S-7	
	3057	40A-S15-8L	2344	2	3043PA-S-8	

Part	NO.	Length(MM)	QTY.	CTN NO.
	40X-Y15-5	3900	2	3043PA-S-5G

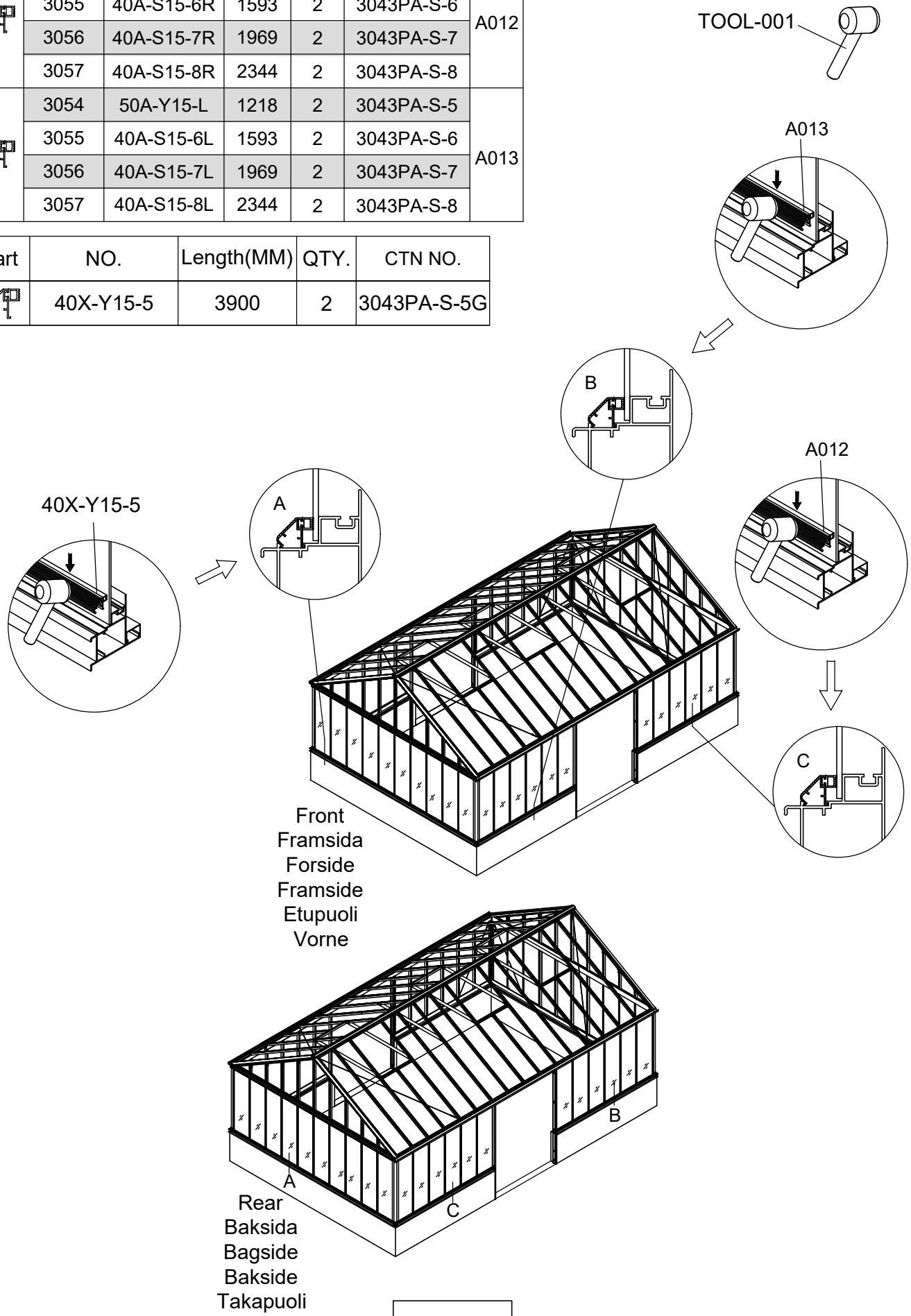

Part	NO.	QTY.												Length (MM)
		3054			3055			3056			3057			
		3054	3149P -S	3149P -S-2	3055	3149P -S	3149P -S-2	3056	3149P -S	3149P -S-2	3057	3149P -S	3149P -S-2	
	40A-Y01	11	7	0	11	8	1	13	8	1	13	7	4	1235
	40A-Y02	1	0	0	1	0	0	1	0	0	1	0	0	1235

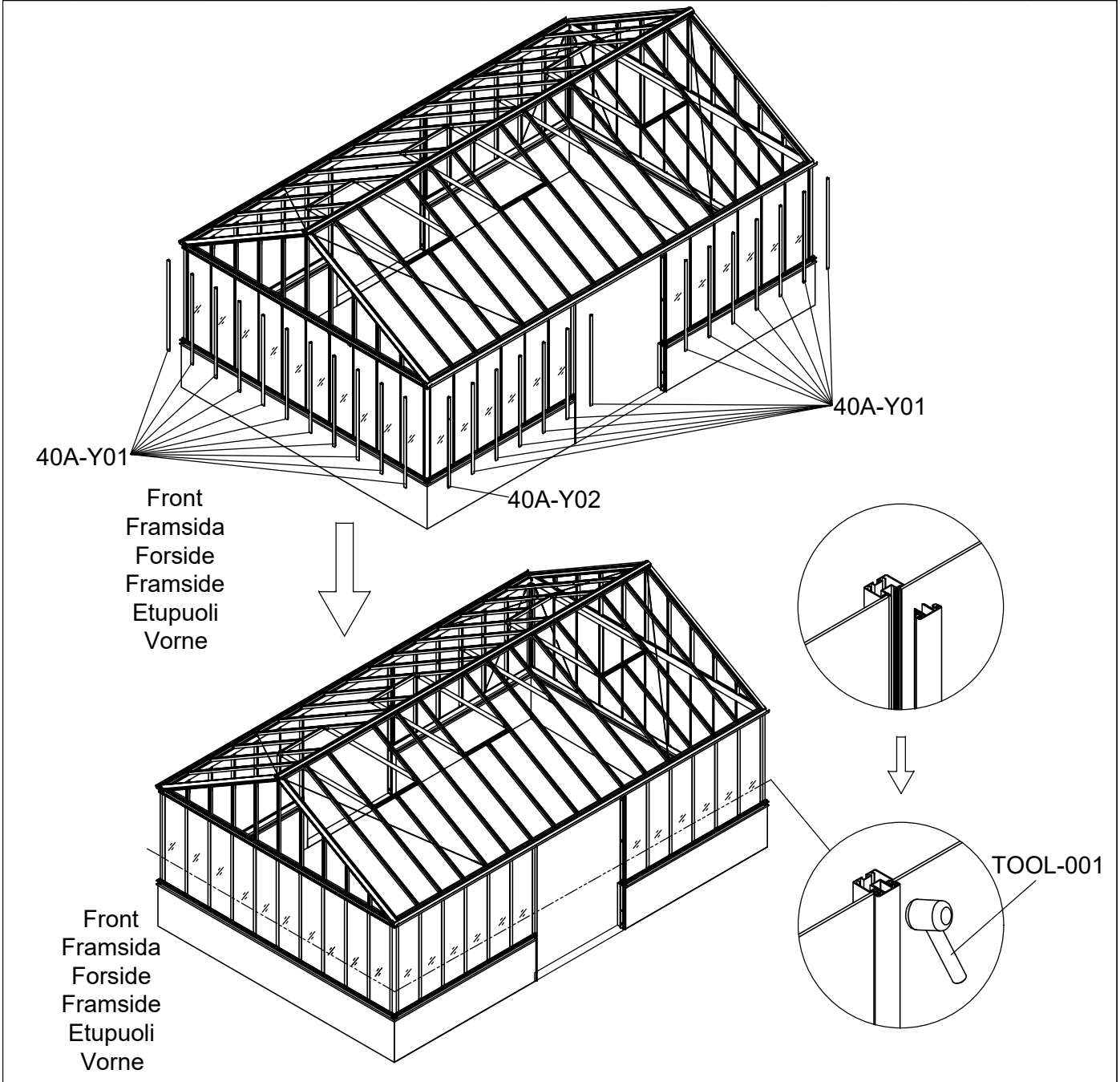

3054	3055	3056	3057
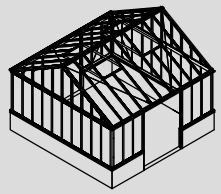	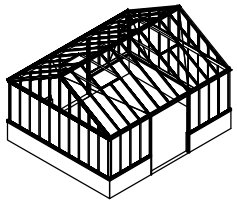	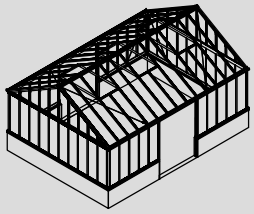	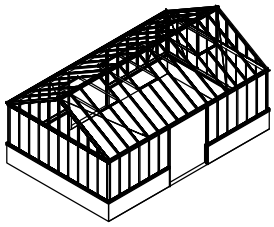

Part	NO.	QTY.												Length (MM)
		3054			3055			3056			3057			
		3054	3149P -S	3149P -S-2	3055	3149P -S	3149P -S-2	3056	3149P -S	3149P -S-2	3057	3149P -S	3149P -S-2	
	40A-Y01	11	7	0	11	9	0	13	9	0	13	10	1	1235
	40A-Y02	1	0	0	1	0	0	1	0	0	1	0	0	1235

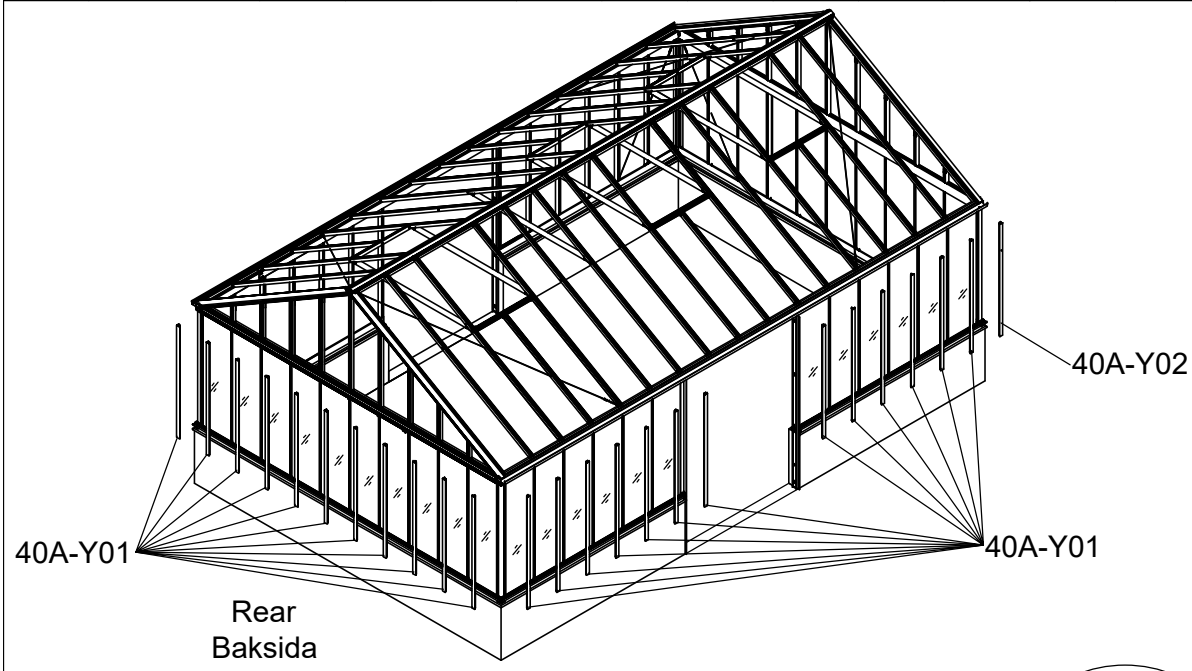

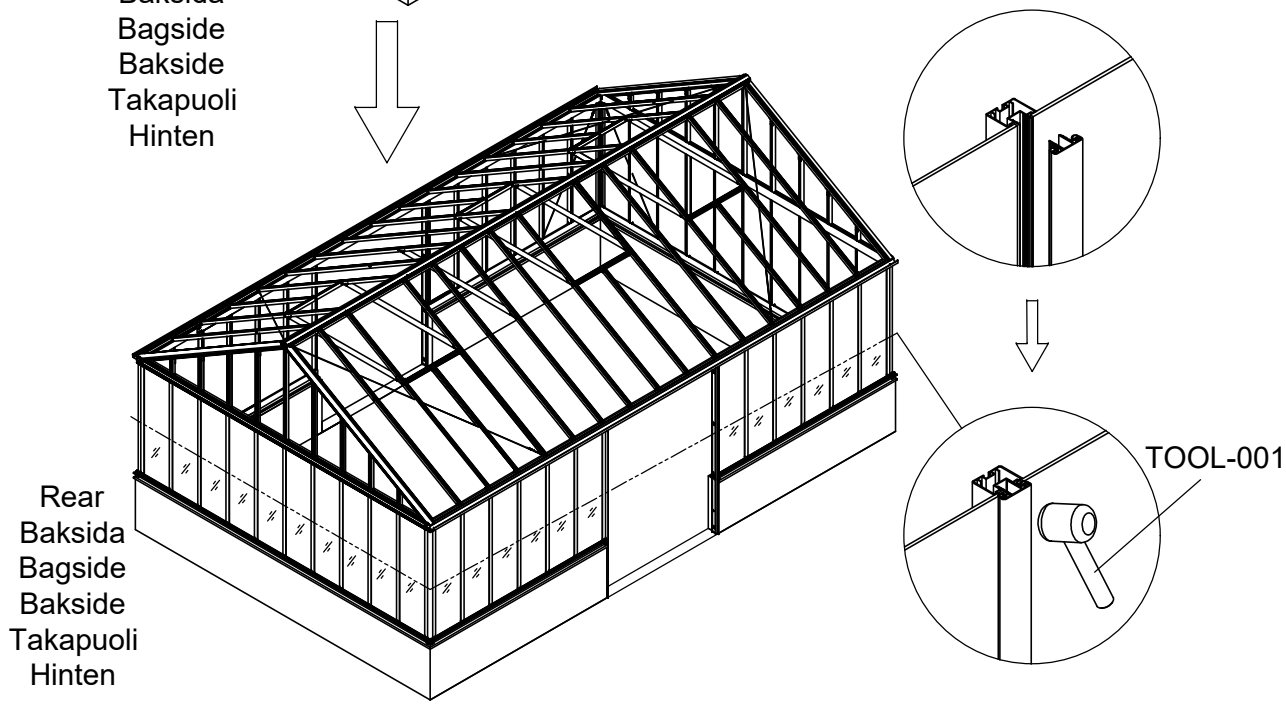

3054	3055	3056	3057
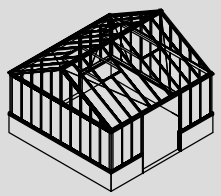	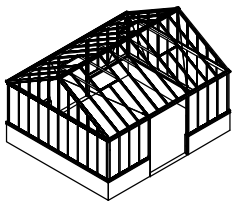	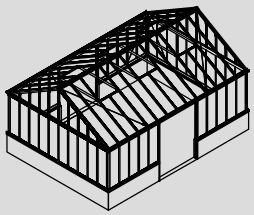	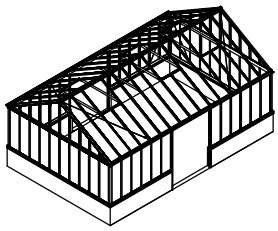

Part	NO.	QTY.				Length(MM)
		3054	3055	3056	3057	
	7C26-007N	14.5M	16M	17.5M	19M	

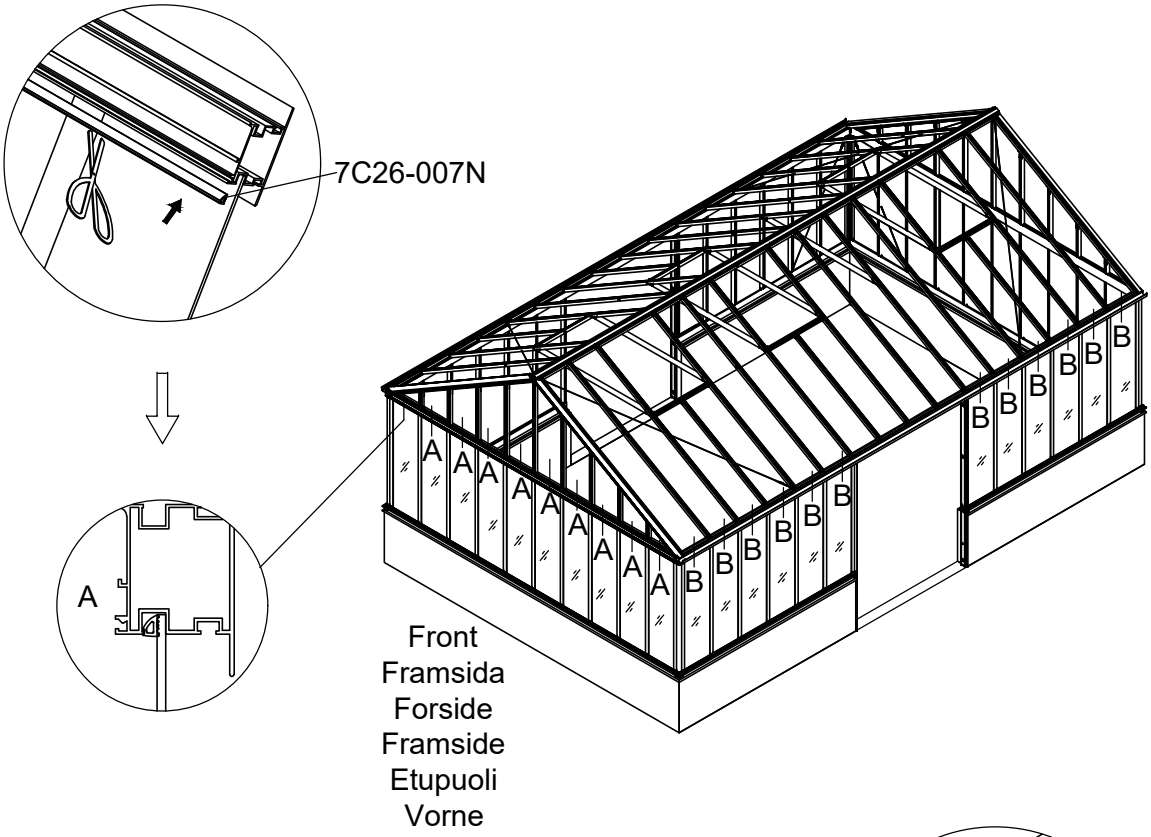

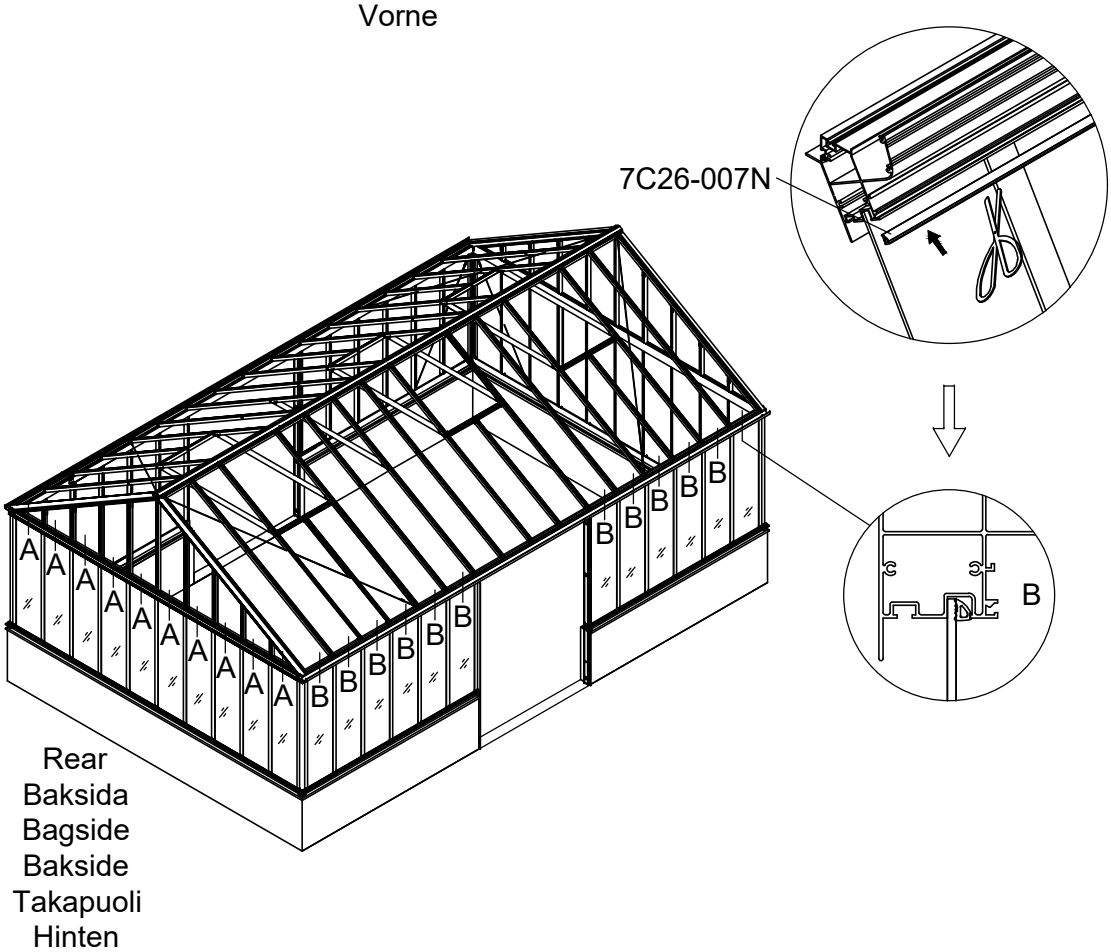

Part	NO.	QTY.	Length(MM)
	324×203	2	324
	354×420	2	420
	354×635	2	635
	354×852	2	852
	354×1068	2	1068

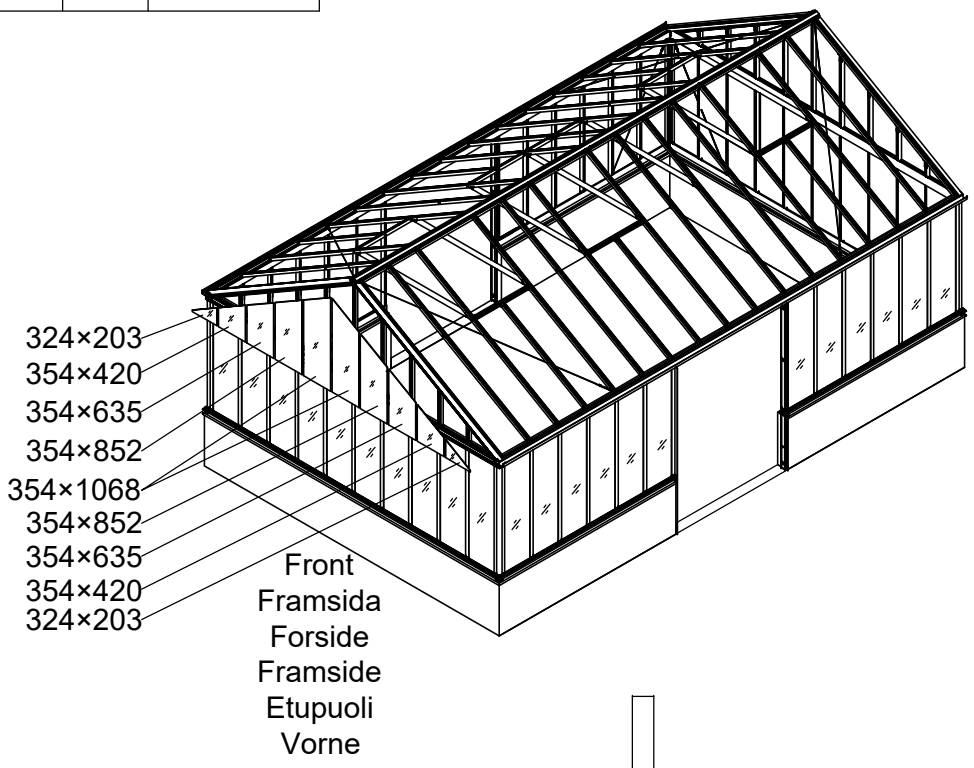

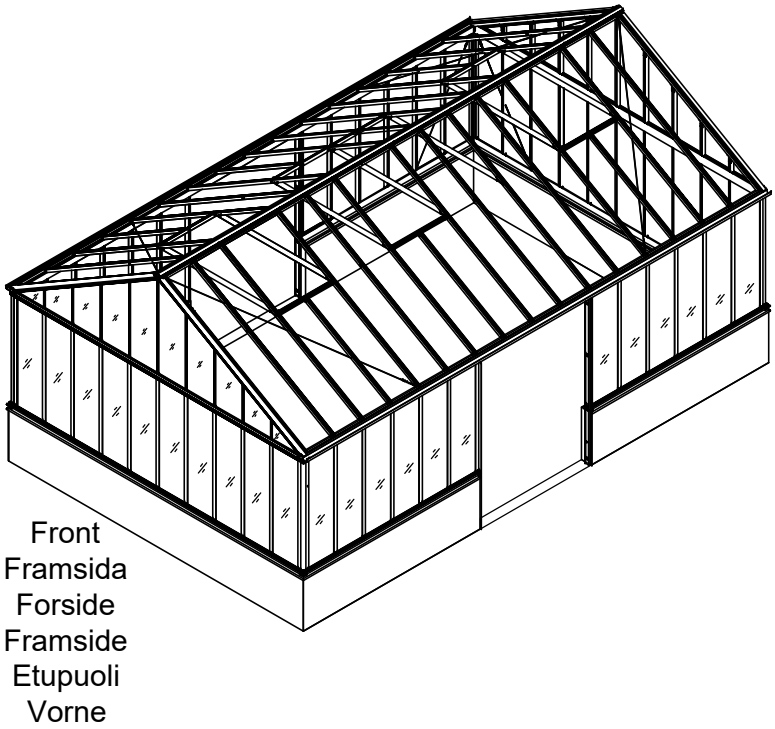

Part	NO.	QTY.	Length(MM)
	50X-Y03	1	1075
	50X-Y04R	1	633
	50X-Y04L	1	633
	50X-Y05R	1	2149
	50X-Y05L	1	2149

Part	NO.	QTY.	Length(MM)	CTN NO.
	50X-Y04A-R	1	851	3149P-S
	50X-Y04A-L	1	851	3149P-S
	40X-Y04R	1	418	3149P-S
	40X-Y04L	1	418	3149P-S
	40X-Y04A-R	1	201	3149P-S
	40X-Y04A-L	1	201	3149P-S

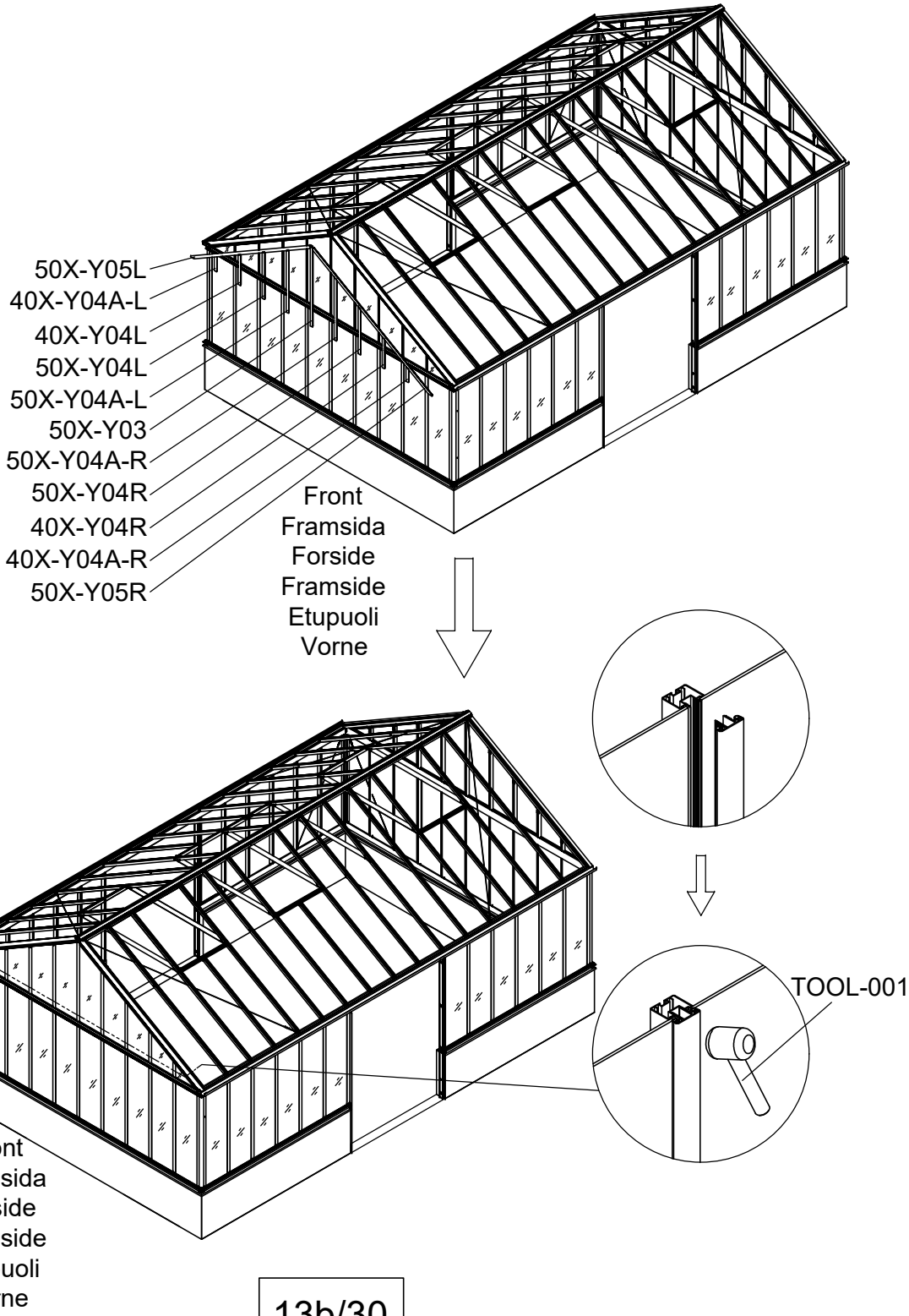

Part	NO.	QTY.	Length(MM)
	324×203	2	324
	354×420	2	420
	354×635	2	635
	354×852	2	852
	354×1068	2	1068

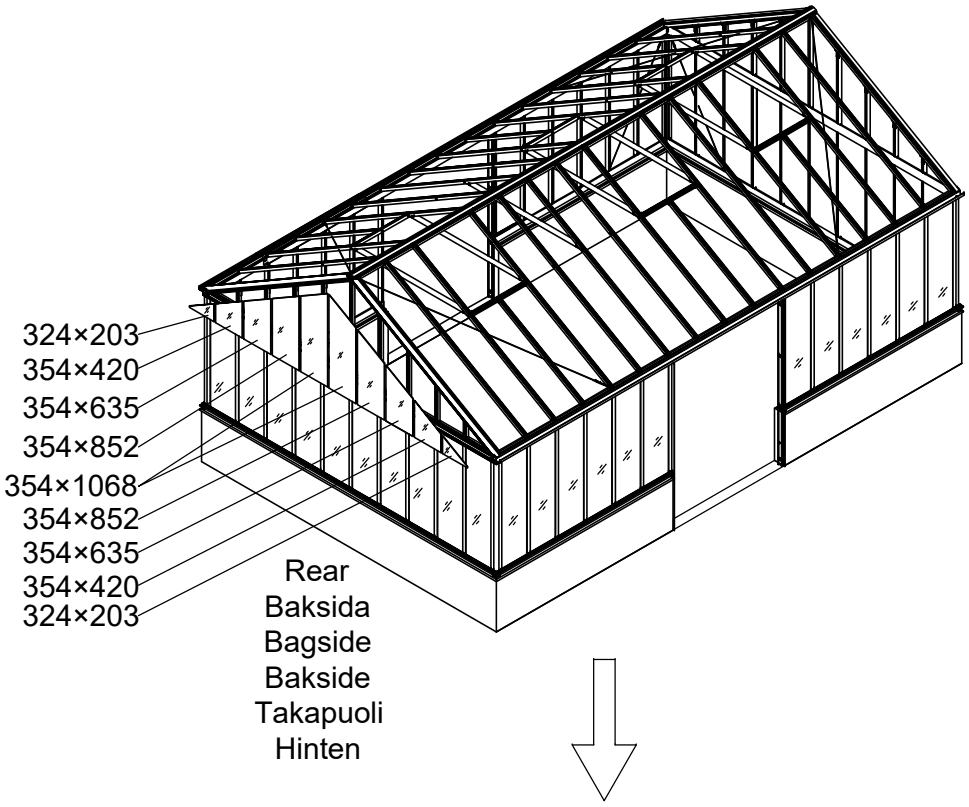

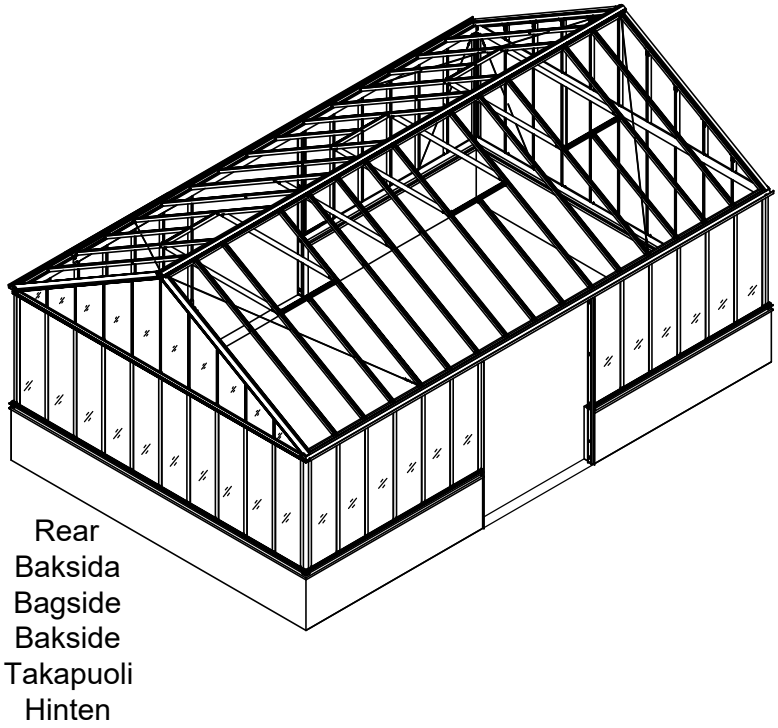

Part	NO.	QTY.	Length(MM)
	50X-Y03	1	1075
	50X-Y04R	1	633
	50X-Y04L	1	633
	50X-Y05R	1	2149
	50X-Y05L	1	2149

Part	NO.	QTY.	Length(MM)	CTN NO.
	50X-Y04A-R	1	851	3149P-S
	50X-Y04A-L	1	851	3149P-S
	40X-Y04R	1	418	3149P-S
	40X-Y04L	1	418	3149P-S
	40X-Y04A-R	1	201	3149P-S
	40X-Y04A-L	1	201	3149P-S

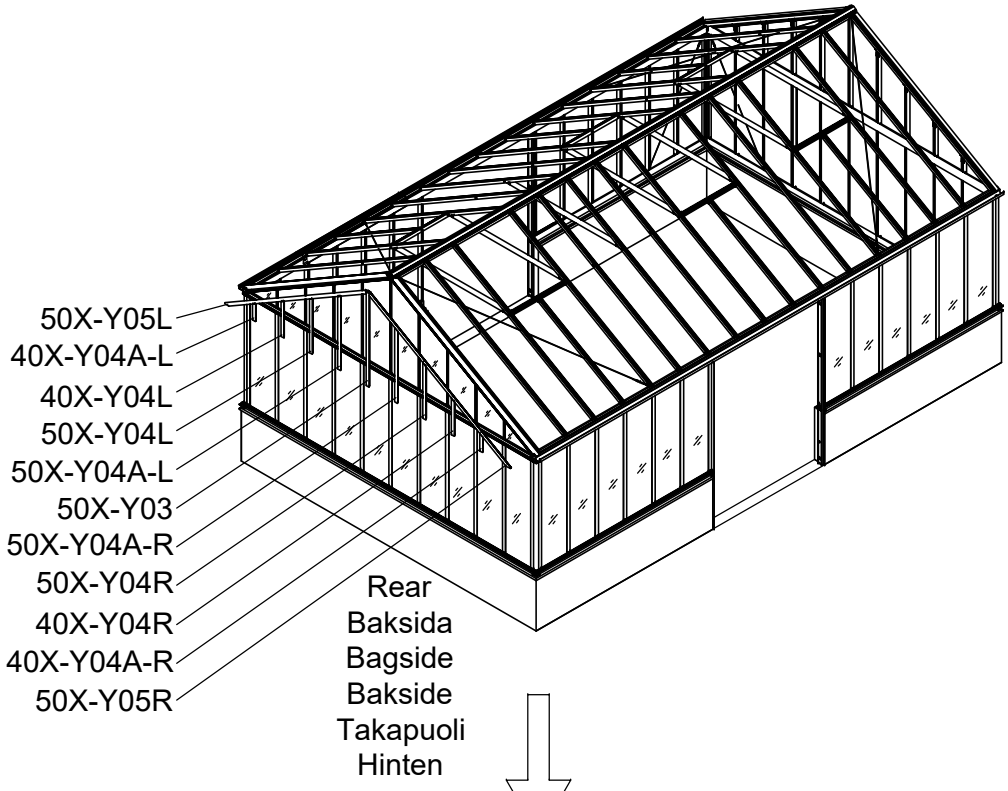

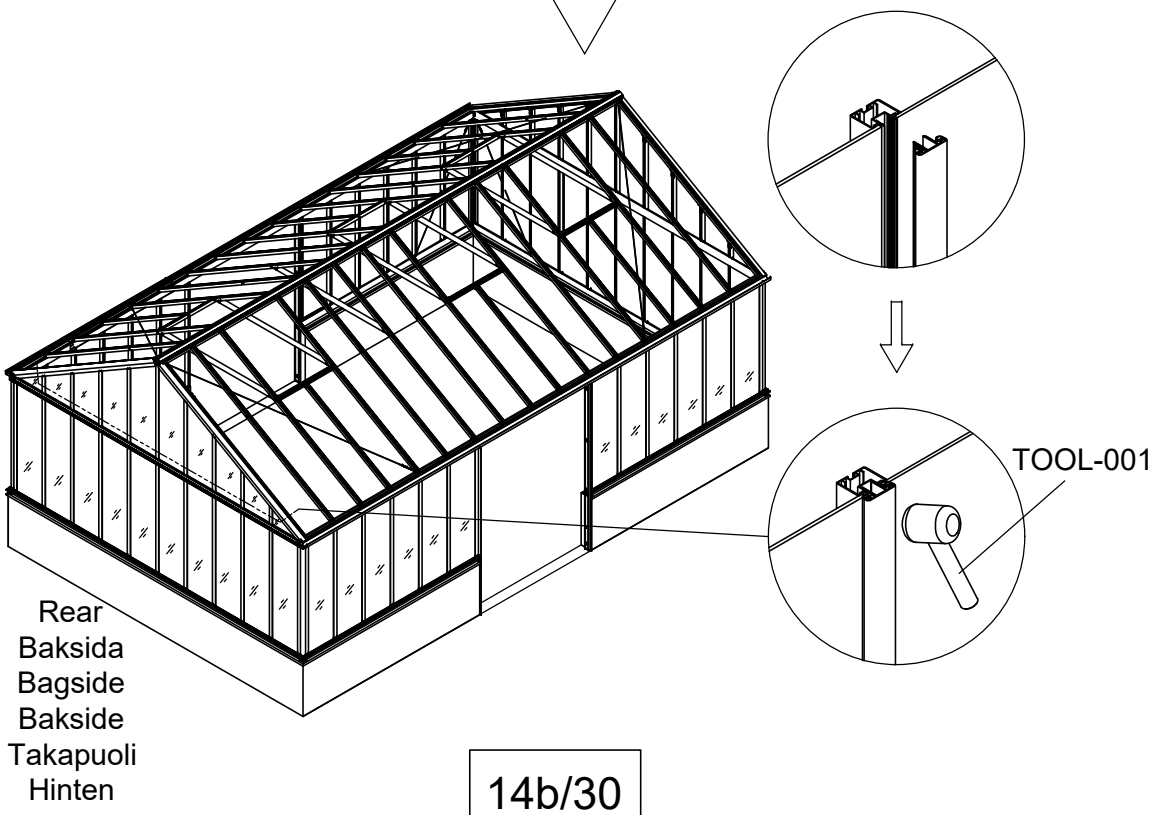

Part	NO.	QTY.				Length(MM)
		3054	3055	3056	3057	
	354×2198	12	16	16	20	2198
	354×1320	8	8	12	12	1320

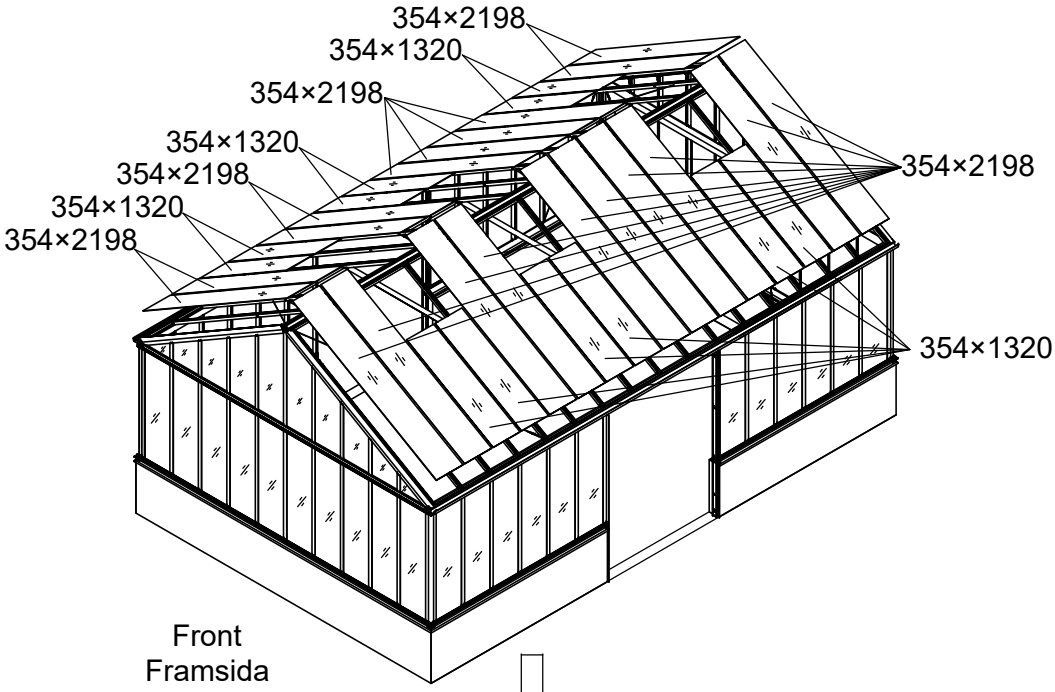

Front
Framsida
Forside
Framside
Etupuoli
Vorne

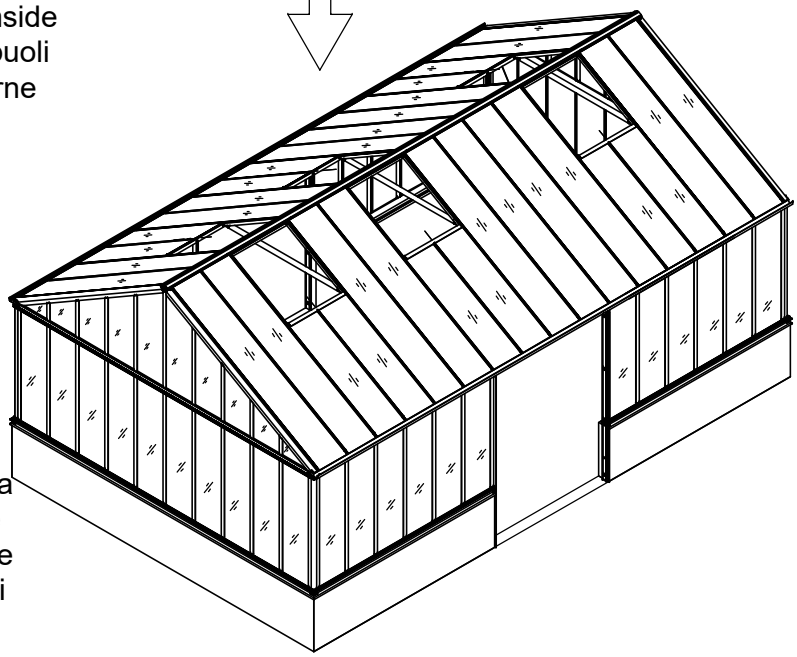

Front
Framsida
Forside
Framside
Etupuoli
Vorne

3054	3055	3056	3057
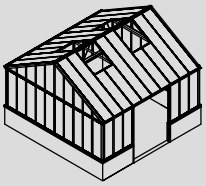	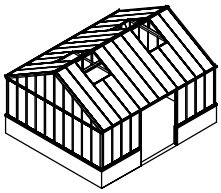	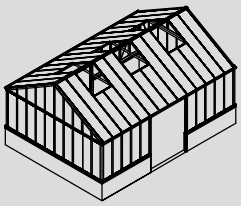	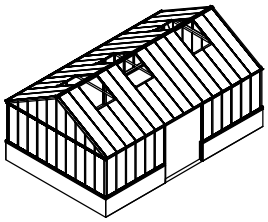

Part	NO.	QTY.												Length (MM)
		3054			3055			3056			3057			
		3054	3149P -S	3149P -S-2	3055	3149P -S	3149P -S-2	3056	3149P -S	3149P -S-2	3057	3149P -S	3149P -S-2	
	50X-Y06	12	6	0	14	6	2	16	6	2	18	6	4	2190
	40X-Y07	4	0	0	4	0	0	6	0	0	6	0	0	712
	50X-Y06A	0	4	0	0	4	0	0	4	2	0	4	2	1312

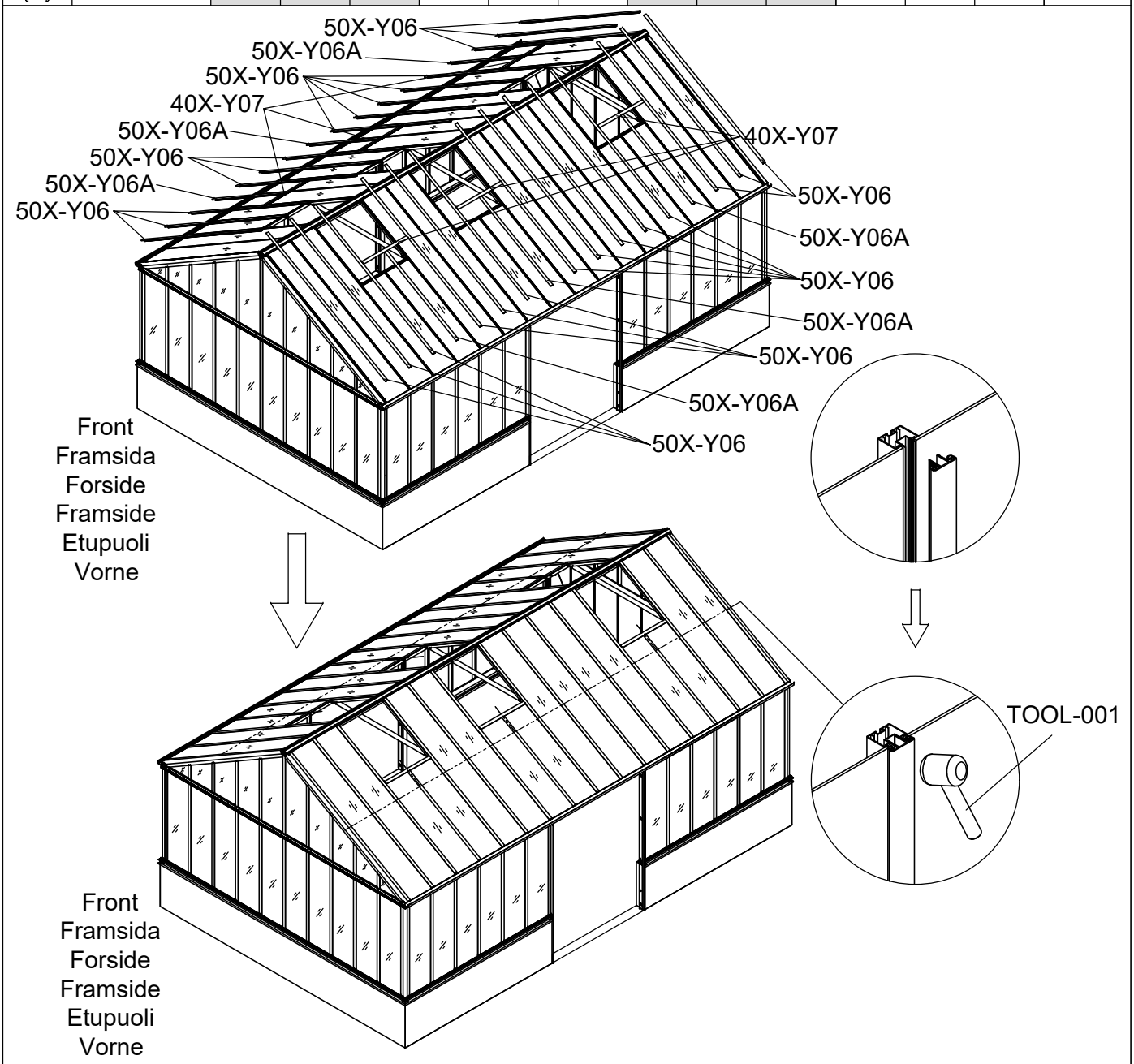

3054	3055	3056	3057
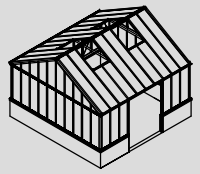	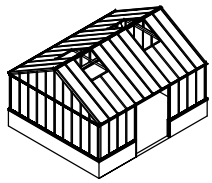	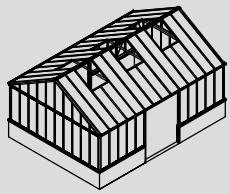	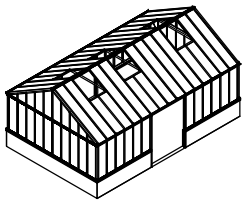

Part	NO.	QTY.				Length(MM)
		3054	3055	3056	3057	
	7C26-009A	5M	6.5M	6.5M	8M	
	7C26-007N	7.5M				

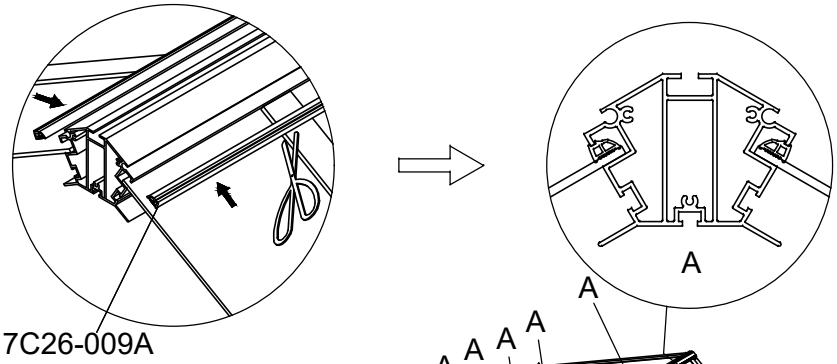

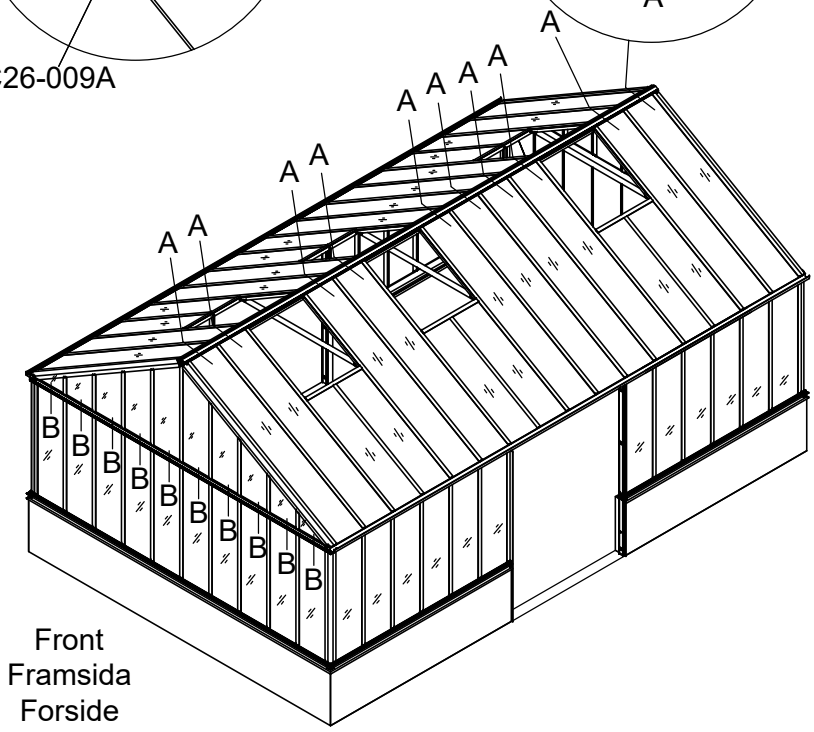

Front
Framsida
Forside
Framside
Etupuoli
Vorne

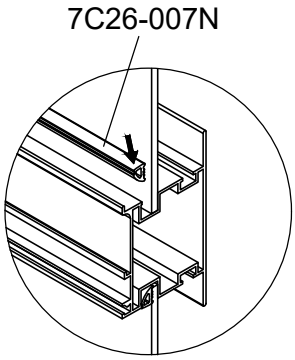

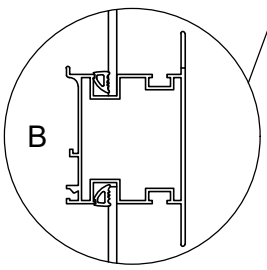

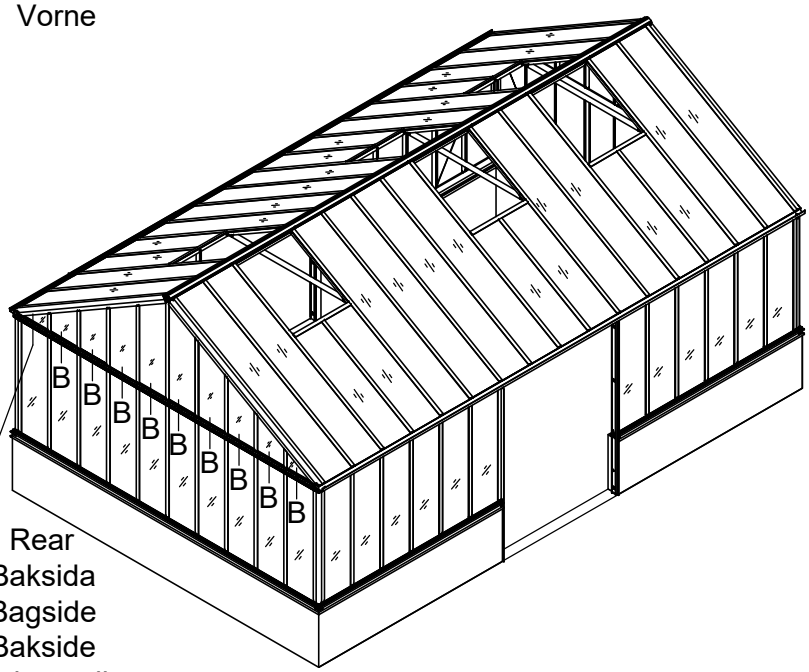

Rear
Baksida
Bagside
Bakside
Takapuoli
Hinten

Part	Product	NO.	Length (MM)	QTY.	CTN NO.	Code
	3054	40X-Y62-5A	3883	2	3000P-40X-Y62-5A	A007
	3055	40X-Y62-6A	4634	2	3000P-40X-Y62-6A	
	3056	40X-Y62-7A	5385	2	3000P-40X-Y62-7A	
	3057	40X-Y62-8A	6136	2	3000P-40X-Y62-8A	

Part	NO.	Length(MM)	QTY.	CTN NO.
	50X-Y60-AN	3774	2	3043PA-S-5G

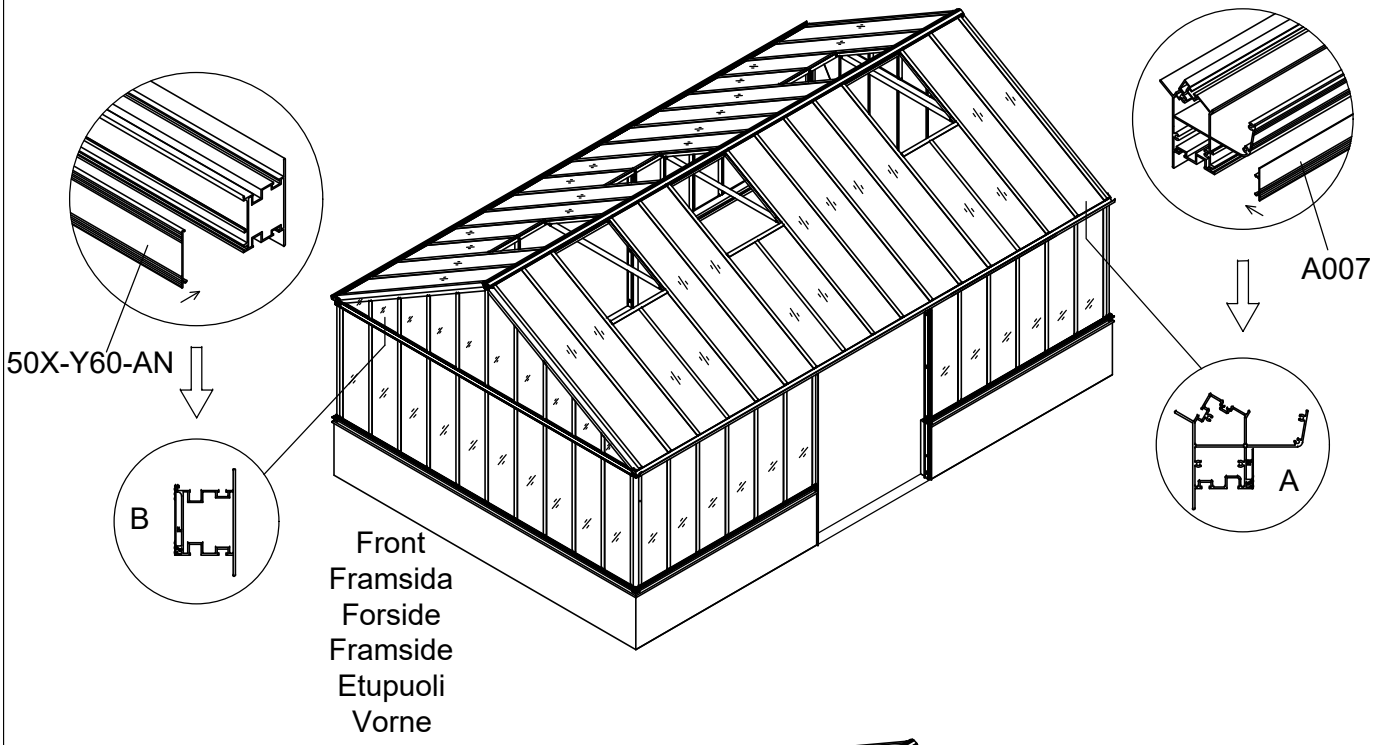

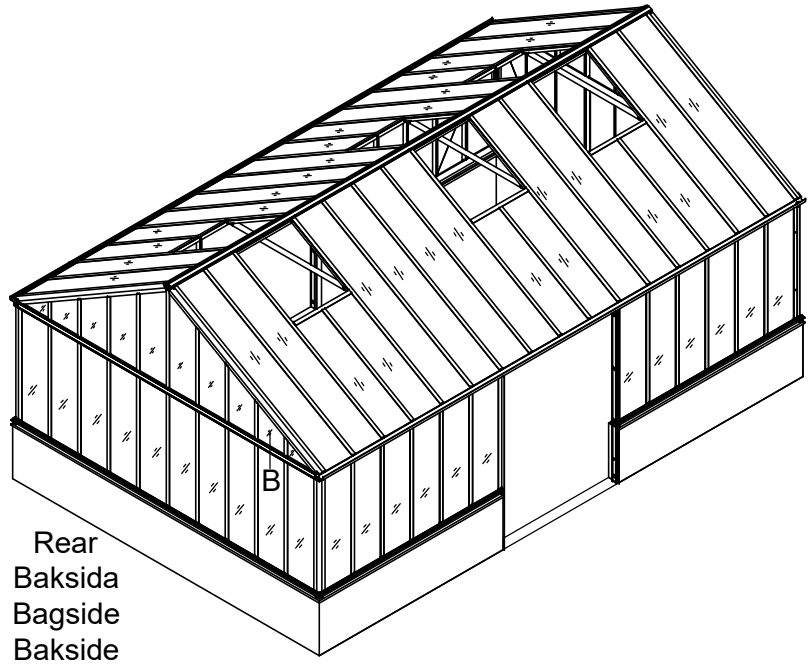

Part	NO.	QTY.	Length(MM)	CTN NO.
	40A-Y108NR	2	693	3040P-HD
	40A-Y106N	2	1872	3040P-HD
	40A-Y107NR	2	1872	3040P-HD
	40A-Y109NR	2	693	3040P-HD
	W07	8	37	3040P-HD
	W04	16	PCS	3040P-HD

2 PCS

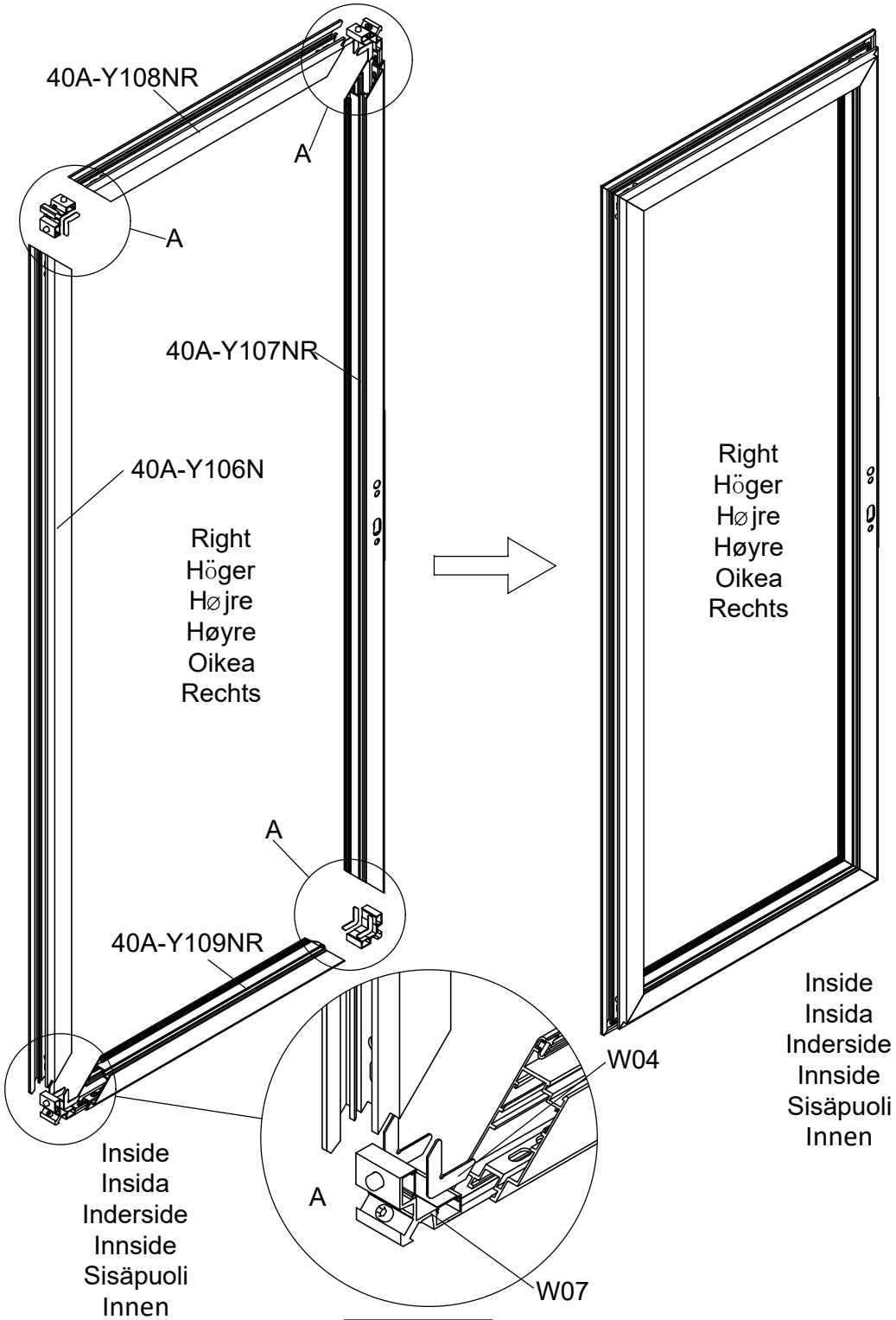

Part	NO.	QTY.	Length(MM)	CTN NO.
	40A-Y107NL	2	1872	3040P-HD
	40A-Y115	4	766	3040P-HD
	T19	4	PCS	3040P-HD

2 PCS

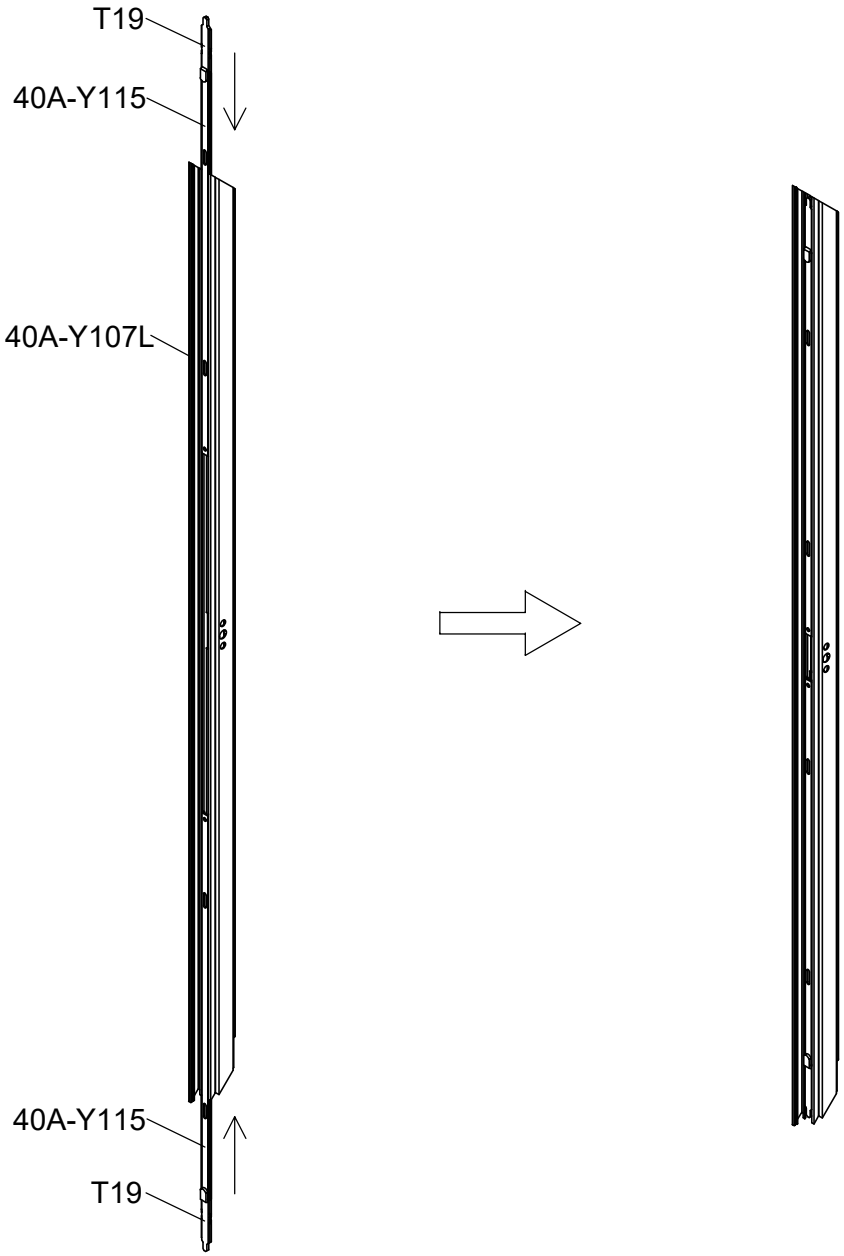

Part	NO.	QTY.	Length(MM)	CTN NO.
	40A-Y108NL	2	693	3040P-HD
	40A-Y106N	2	1872	3040P-HD
	40A-Y109NL	2	693	3040P-HD
	W07	8	37	3040P-HD
	W04	16	PCS	3040P-HD

2 PCS

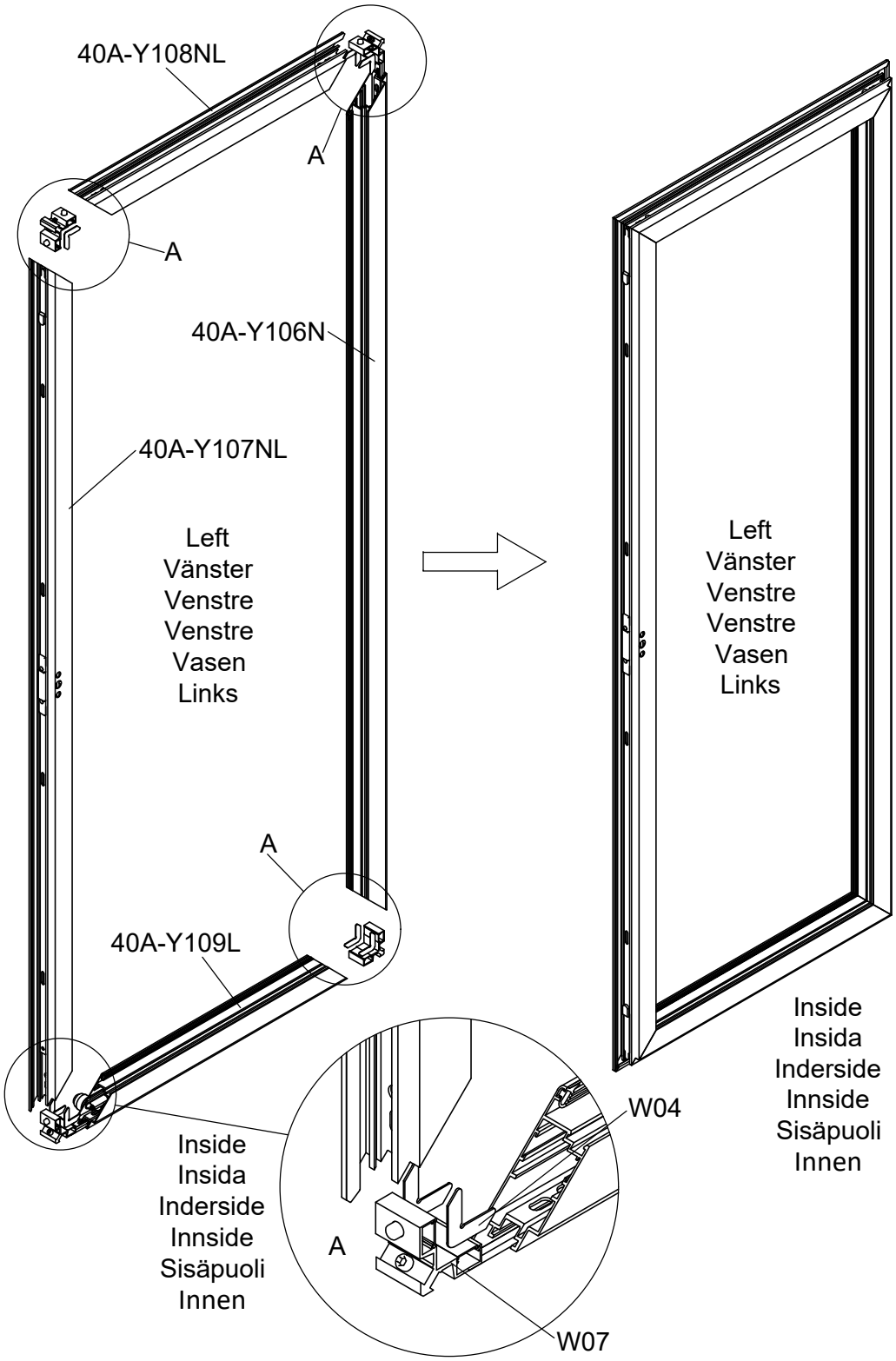

Part	NO.	QTY.	Length(MM)	CTN NO.
	40X-Y91-A3	2	PCS	3040P-HD
	Z3.5-25	4	PCS	3040P-HD

2 PCS

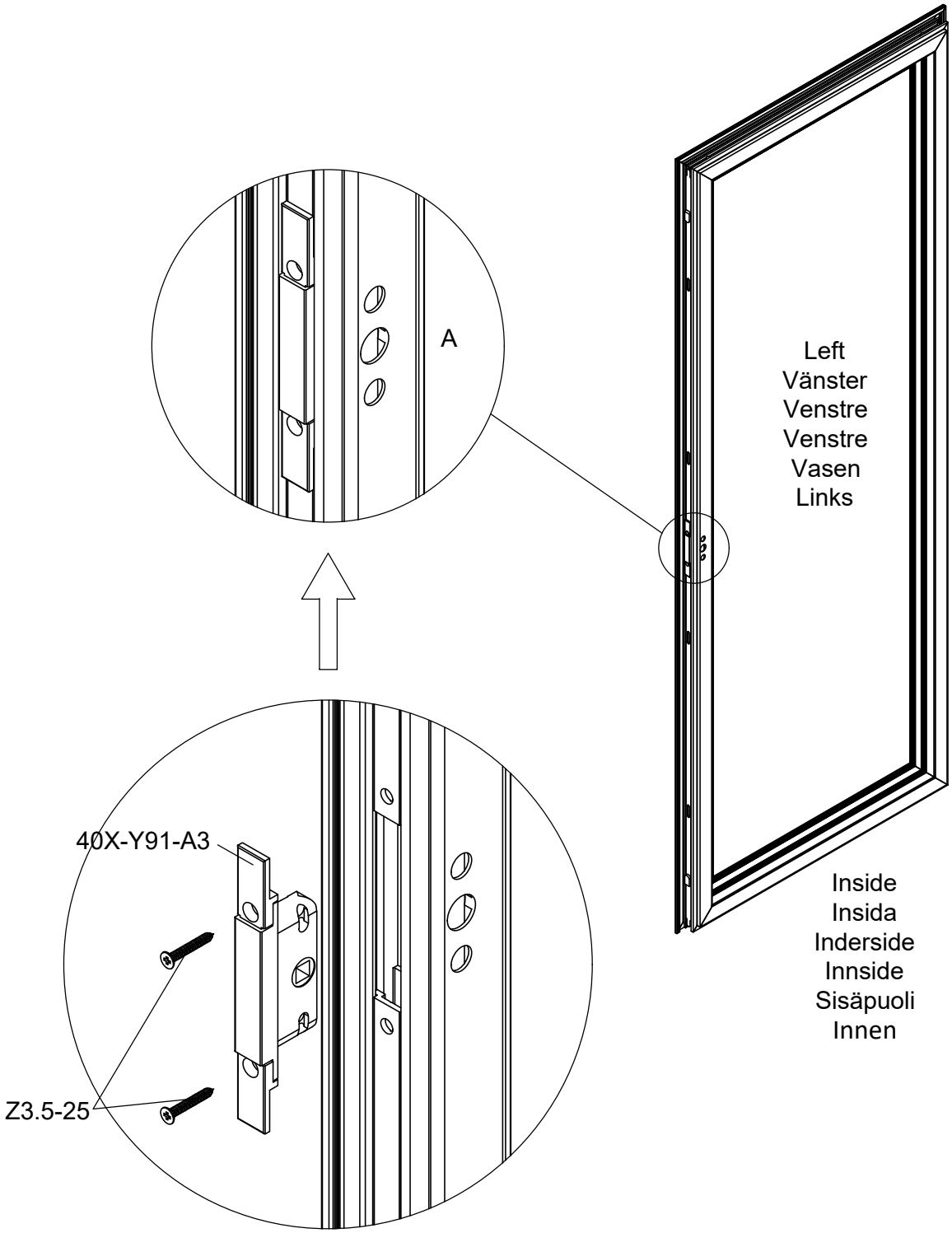

Part	NO.	QTY.	Length(MM)	CTN NO.
	40A-Y112N	4	1730	3040P-HD
	40A-Y113N	4	517	3040P-HD
	539×1718	2	1718	

2 PCS

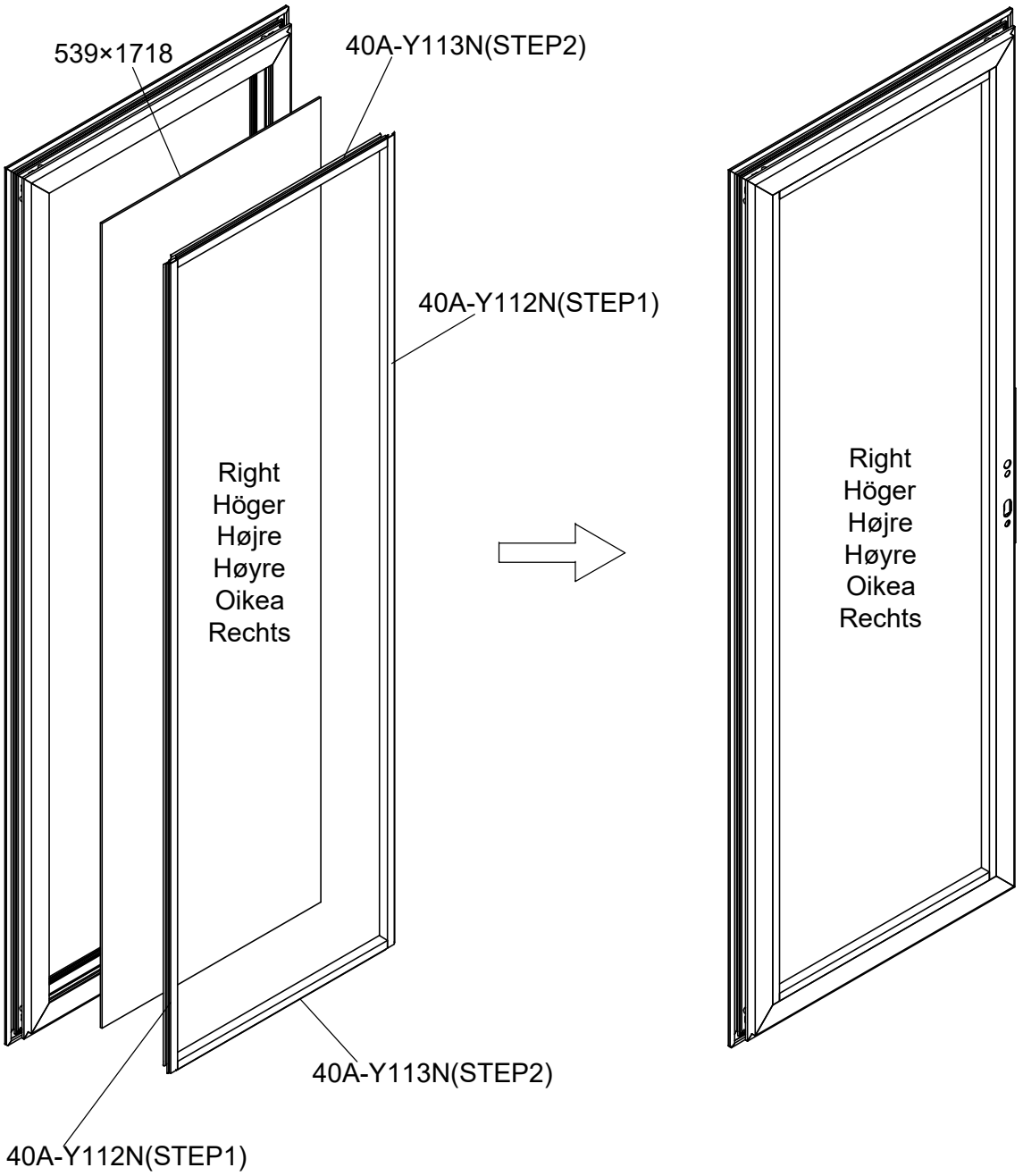

Part	NO.	QTY.	Length(MM)	CTN NO.
	40A-Y112N	4	1730	3040P-HD
	40A-Y113N	4	517	3040P-HD
	539×1718	2	1718	

2 PCS

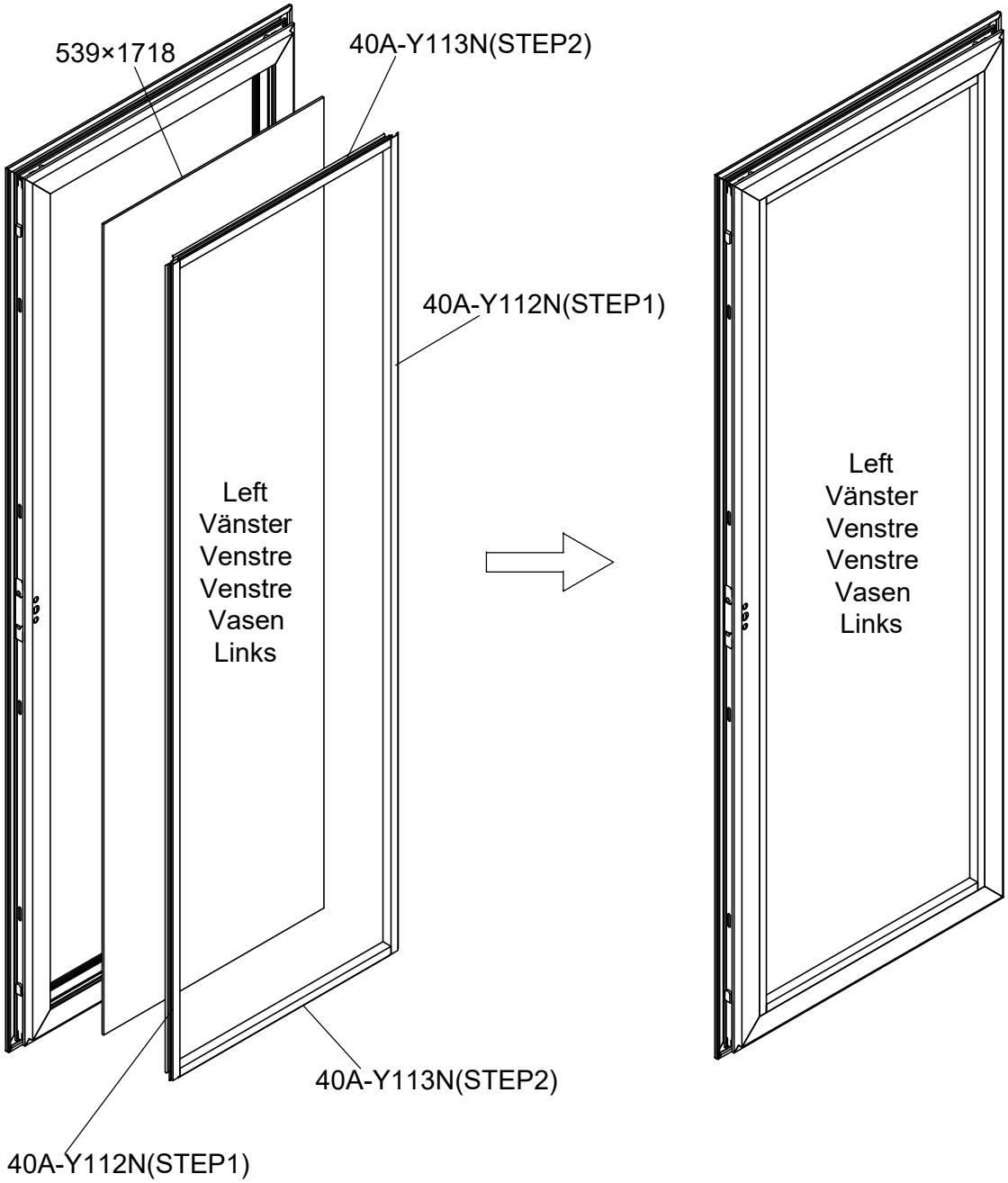

Part	NO.	QTY.	Length(MM)
	7C26-007N	22M	

2 PCS

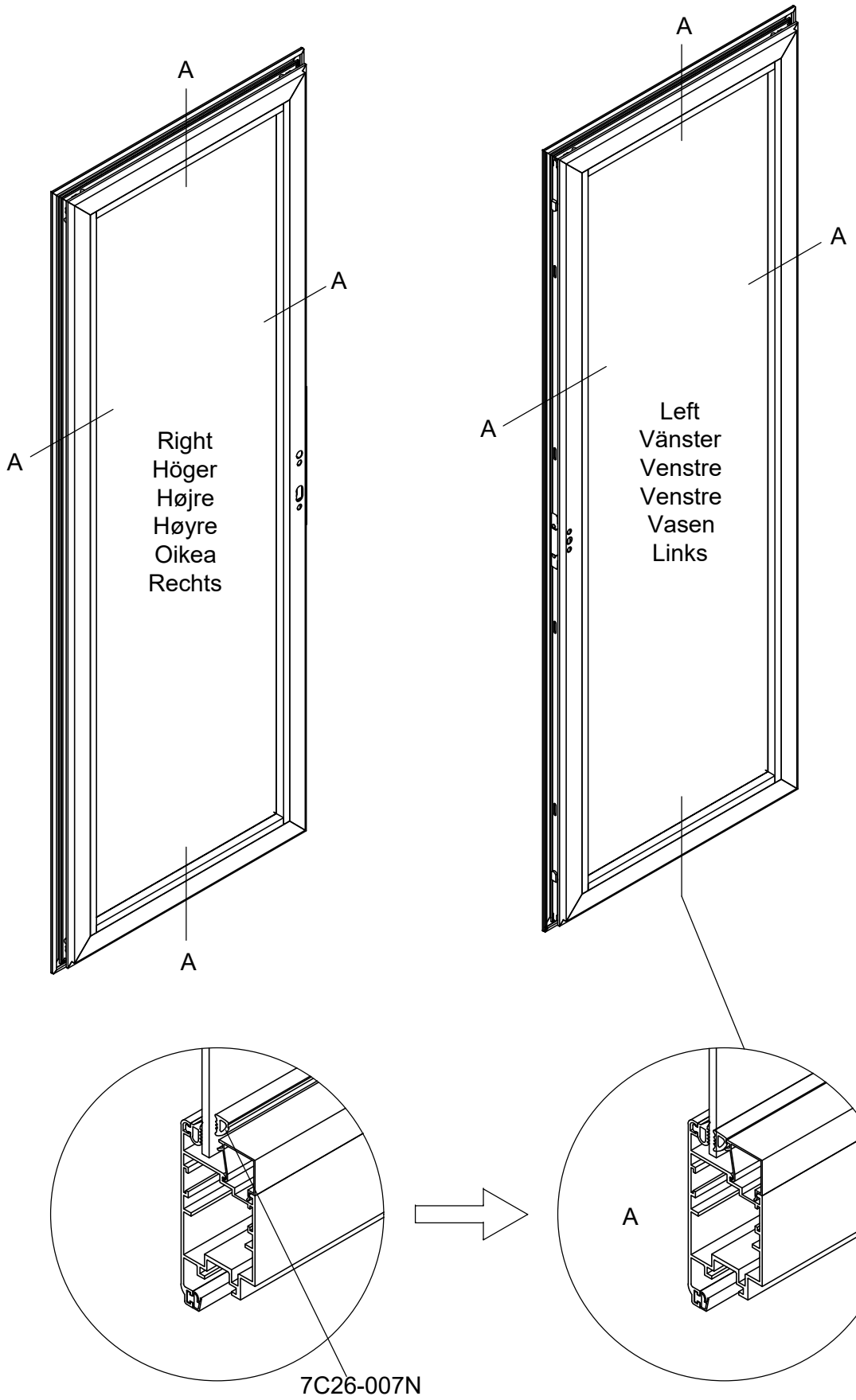

Part	NO.	QTY.	Length(MM)	CTN NO.
	40A-Y114	2	1817	3040P-HD
	Z4.2-38	8	PCS	3040P-HD
	7C28-004	8	PCS	3040P-HD

2 PCS

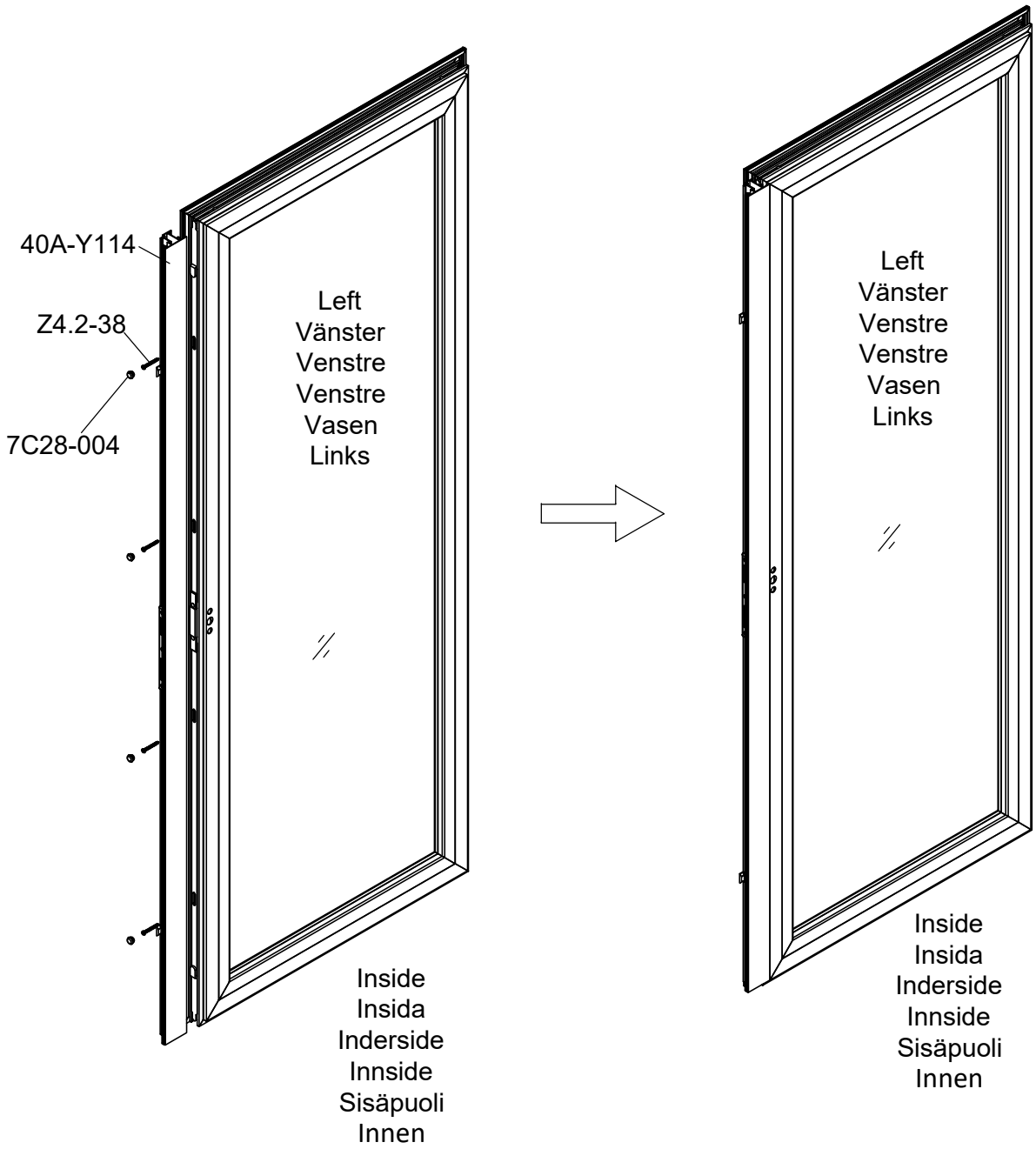

Part	NO.	QTY.	Length(MM)	CTN NO.
	T11R-1	6	PCS	3040P-HD
	T11R-2	6	PCS	3040P-HD
	T11L-1	6	PCS	3040P-HD
	T11L-2	6	PCS	3040P-HD

2 PCS

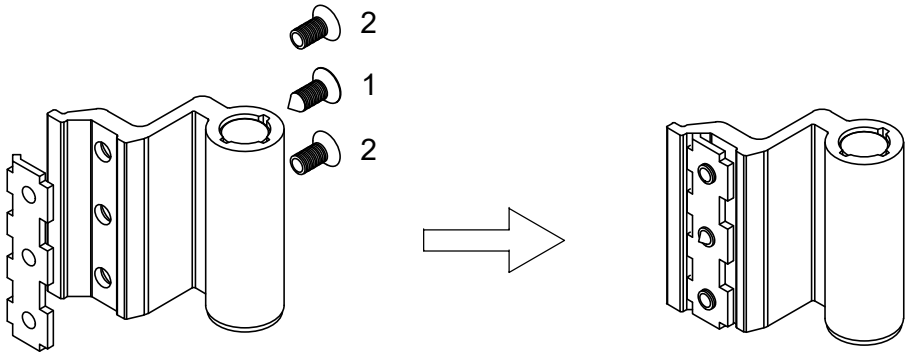

T11R-1

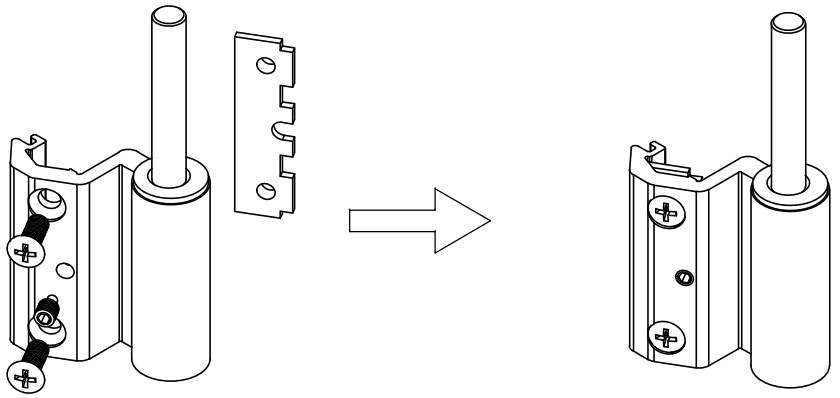

T11R-2

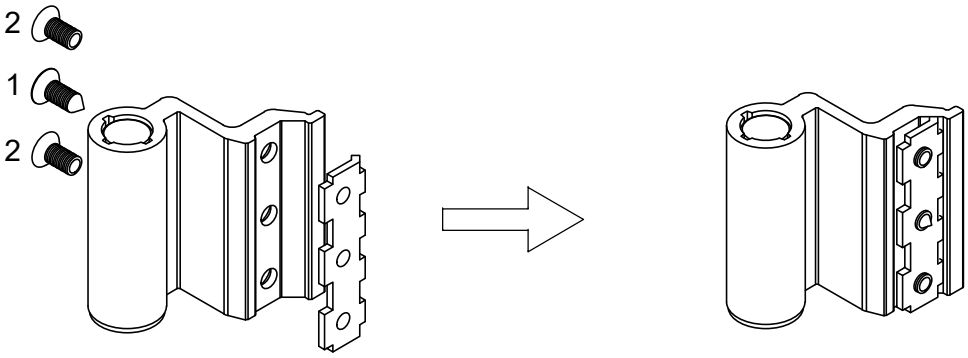

T11L-1

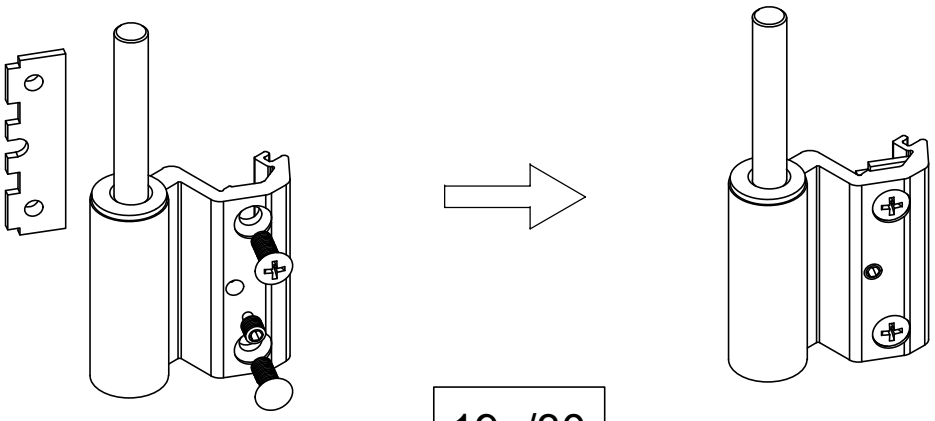

T11L-2

2 PCS

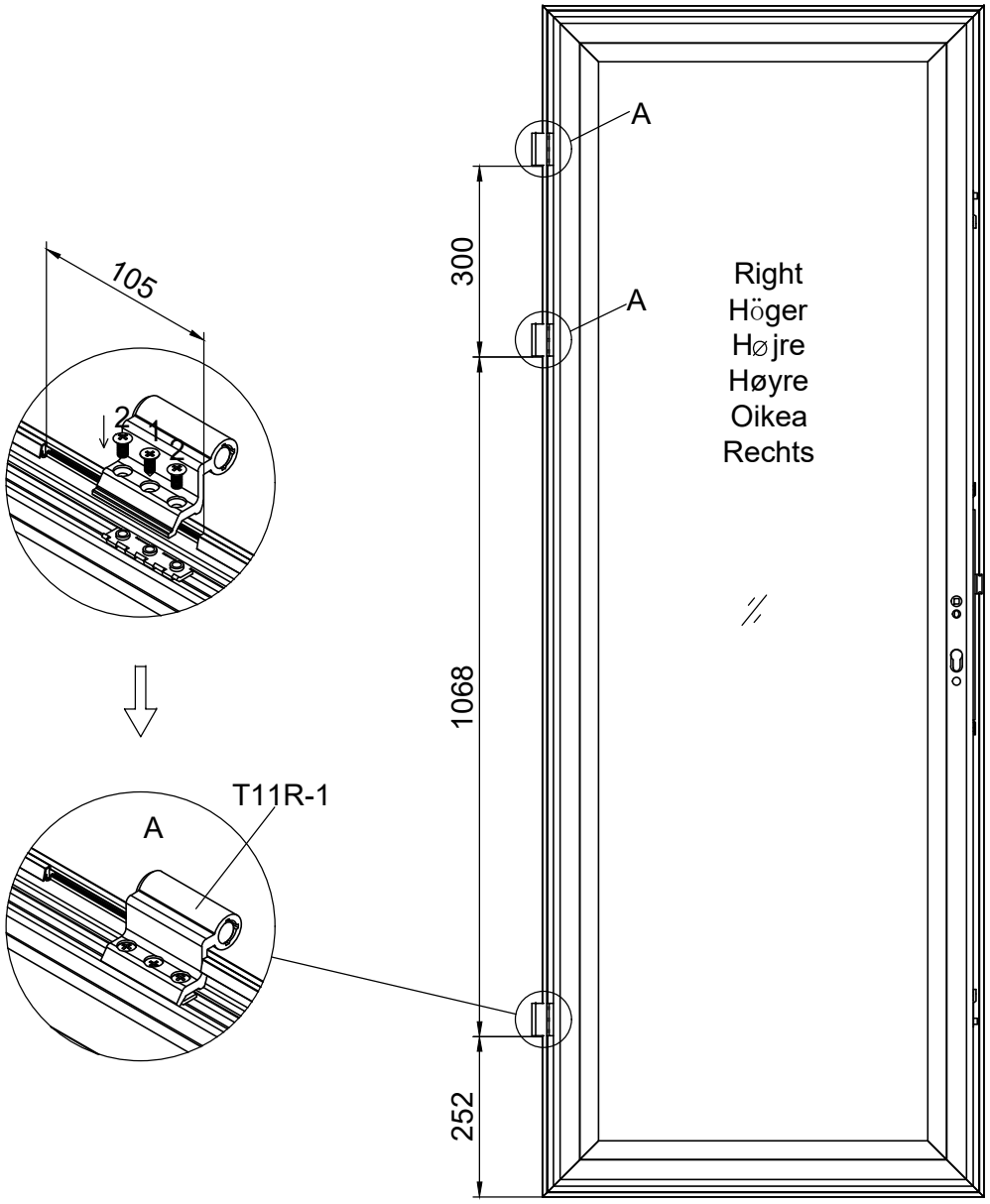

Inside
Insida
Inderside
Innside
Sisäpuoli
Innen

2 PCS

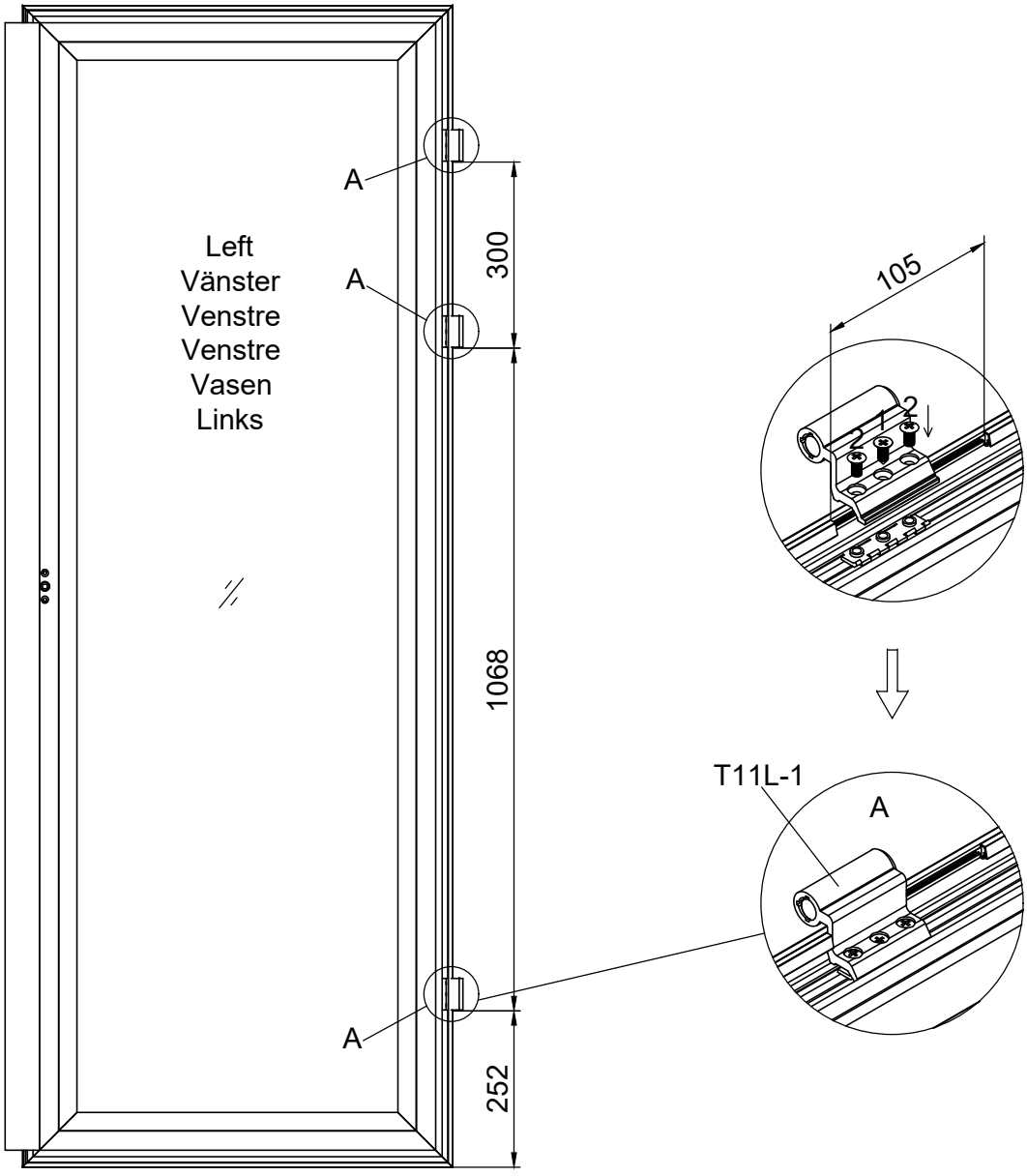

Inside
Insida
Inderside
Innside
Sisäpuoli
Innen

Part	NO.	QTY.	Length(MM)	CTN NO.
	40A-Y102L	1	1910	3040P-HD
	40A-Y102R	1	1910	3040P-HD
	Ma6-12	4	PCS	3040P-HD
	M6	4	PCS	3040P-HD

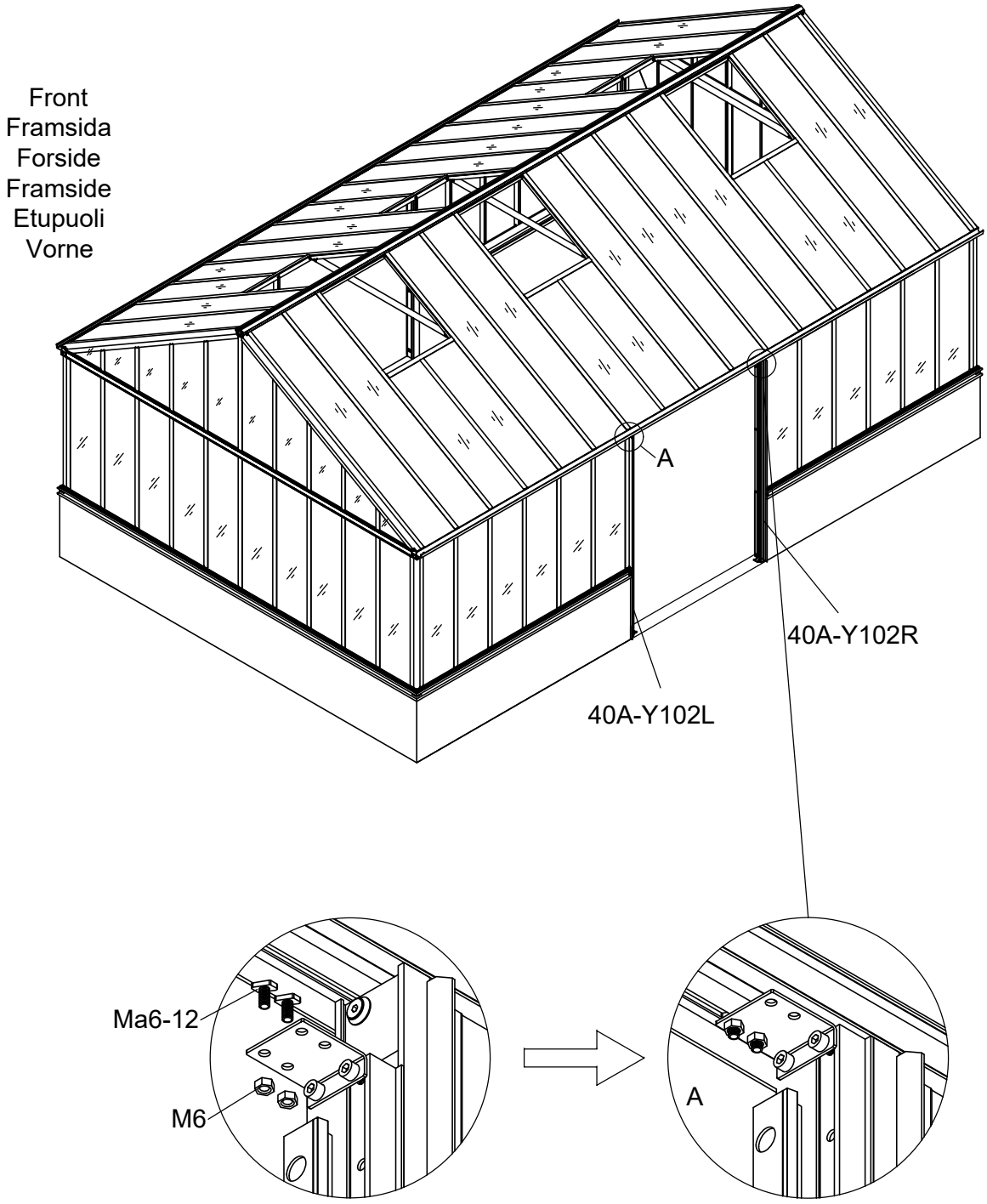

Part	NO.	QTY.	Length(MM)	CTN NO.
	40A-Y102L	1	1910	3040P-HD
	40A-Y102R	1	1910	3040P-HD
	Ma6-12	4	PCS	3040P-HD
	M6	4	PCS	3040P-HD

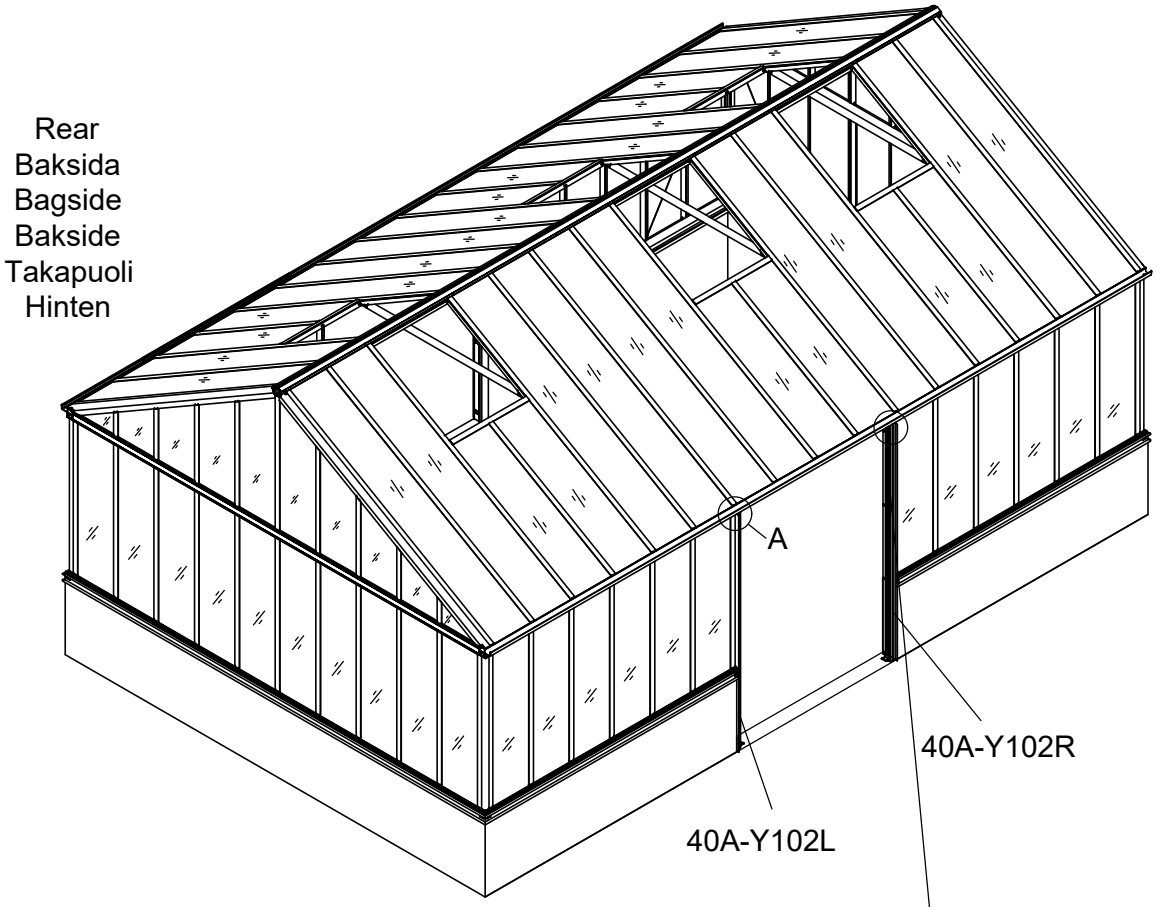

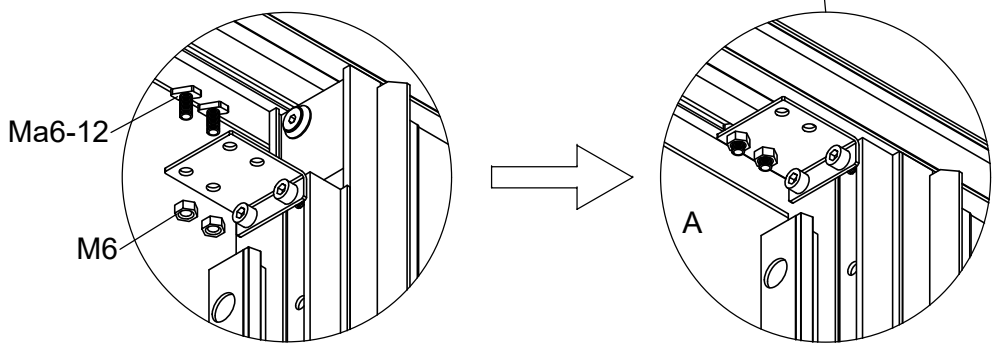

Part	NO.	QTY.	Length(MM)	CTN NO.
	7C33-001	8	PCS	3040P-HD
	M6-35	8	PCS	3040P-HD
	My6-30	8	PCS	3040P-HD

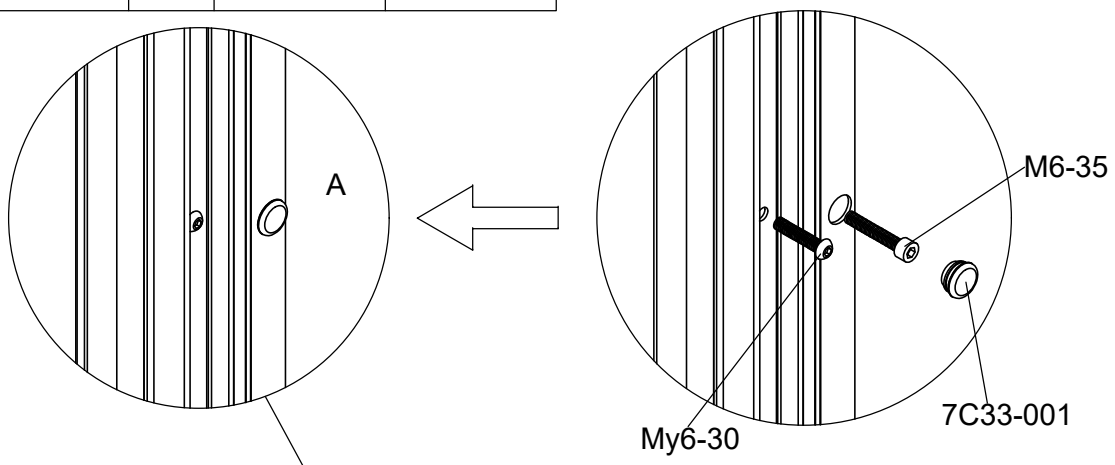

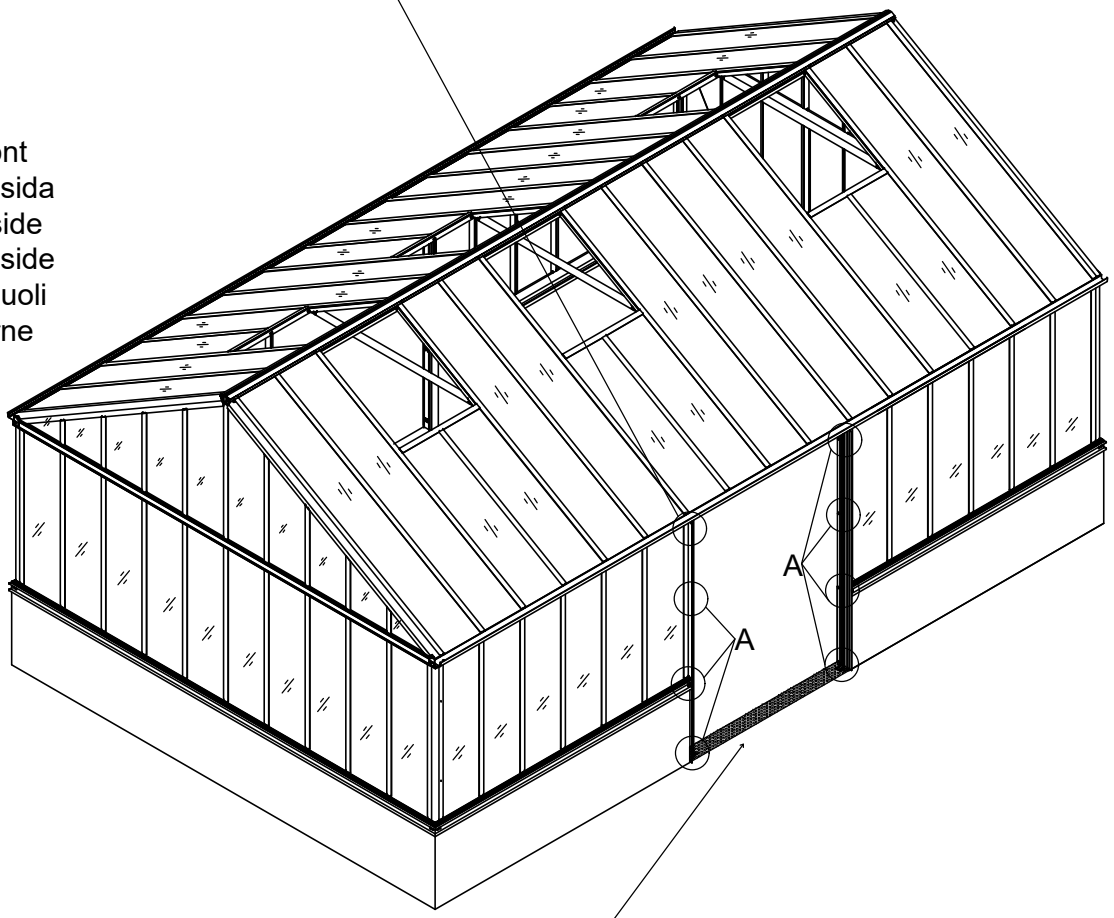

Make sure the floor below the doors frame should be flat and solid.
Se till att underlaget under dörrramen är plan och på solid grund.
Sørg for, at underlaget under dørkarmen er plan og på fast grund.
Sørg for at underlaget under dørterskelen er slett og på solid fundament.
Tarkista, että maa ovikarmin alla on sileä ja tasainen.
Achten Sie darauf, dass der Boden unter dem Türrahmen eben und fest ist.

Part	NO.	QTY.	Length(MM)	CTN NO.
	7C33-001	8	PCS	3040P-HD
	M6-35	8	PCS	3040P-HD
	My6-30	8	PCS	3040P-HD

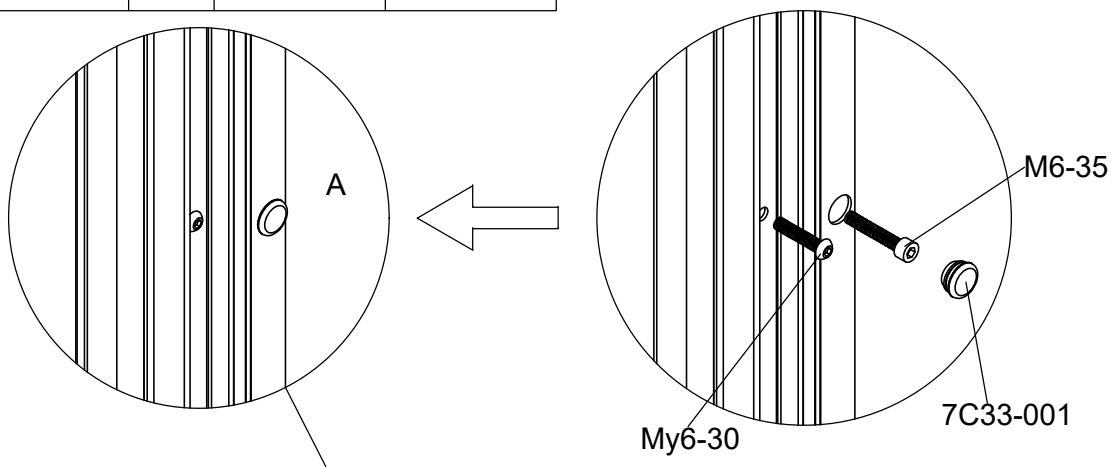

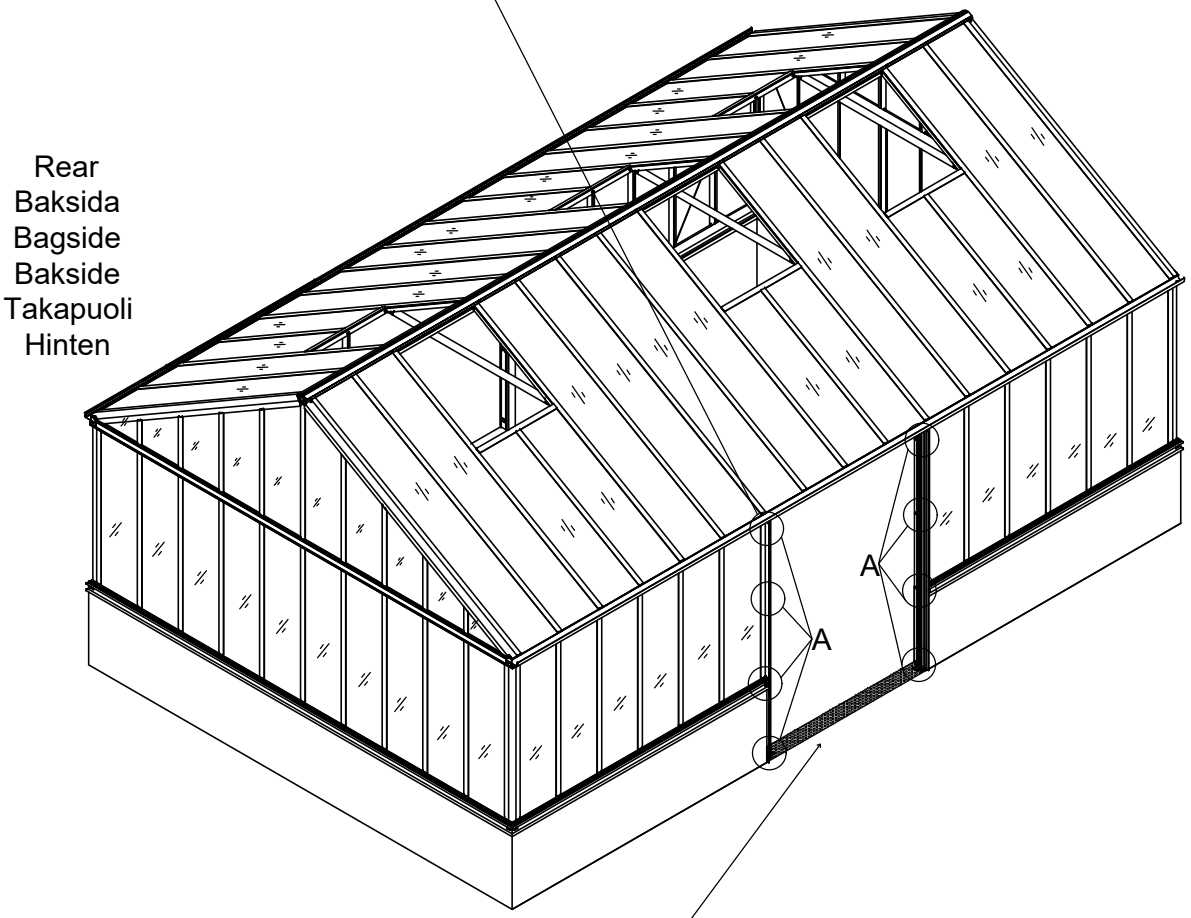

Make sure the floor below the doors frame should be flat and solid.
Se till att underlaget under dörrramen är plan och på solid grund.
Sørg for, at underlaget under dørkarmen er plan og på fast grund.
Sørg for at underlaget under dørterskelen er slett og på solid fundament.
Tarkista, että maa ovikarmin alla on sileä ja tasainen.
Achten Sie darauf, dass der Boden unter dem Türrahmen eben und fest ist.

Part	NO.	QTY.	Length(MM)	CTN NO.
	7B26-122	2	PCS	3040P-HD
	Ma6-12	4	PCS	3040P-HD
	M6	4	PCS	3040P-HD

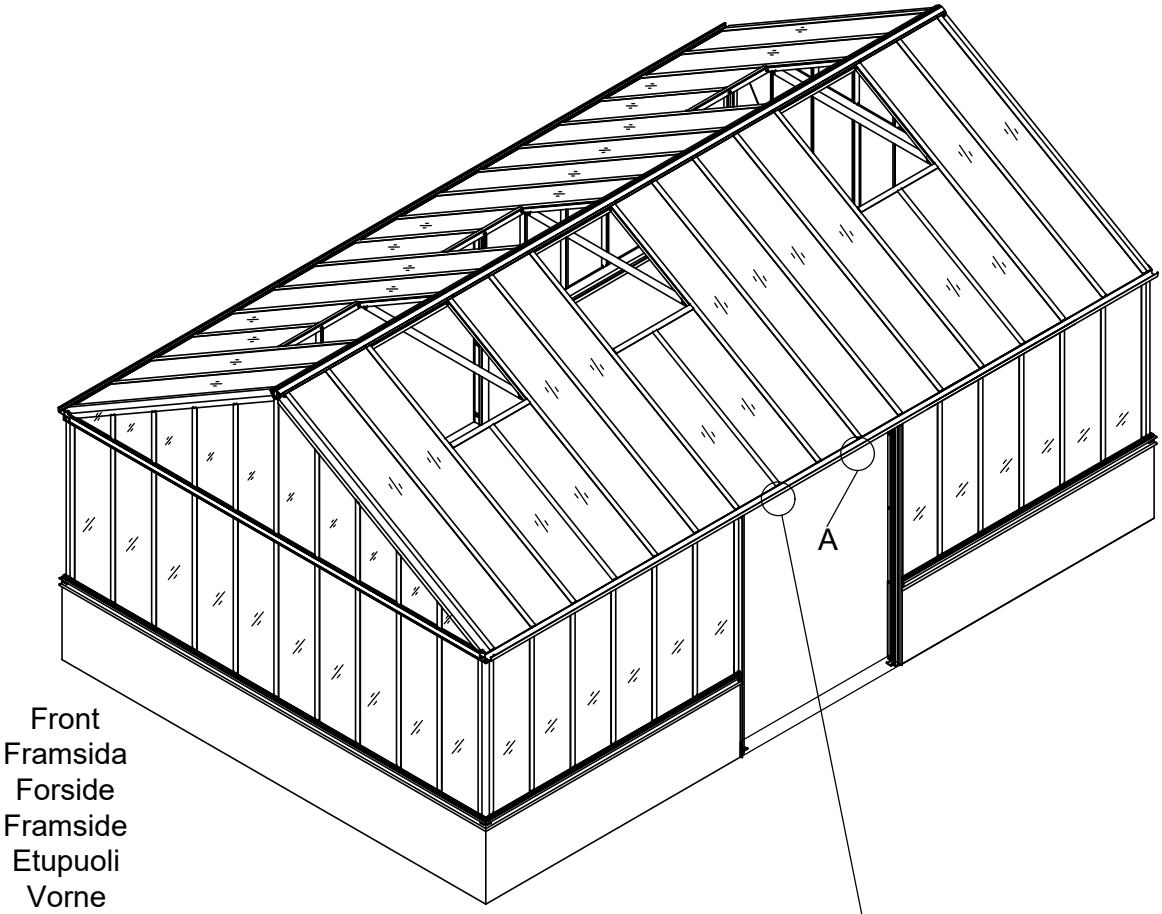

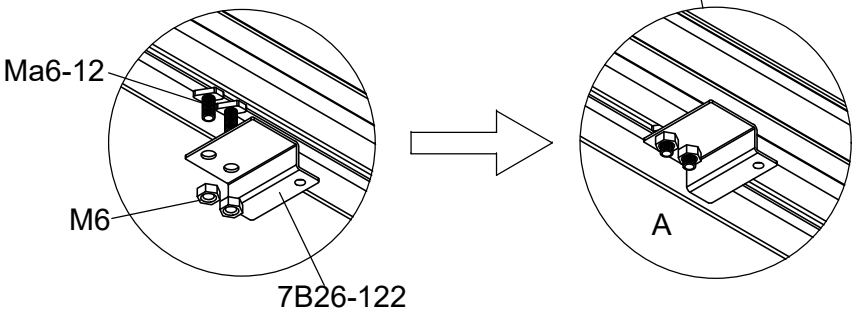

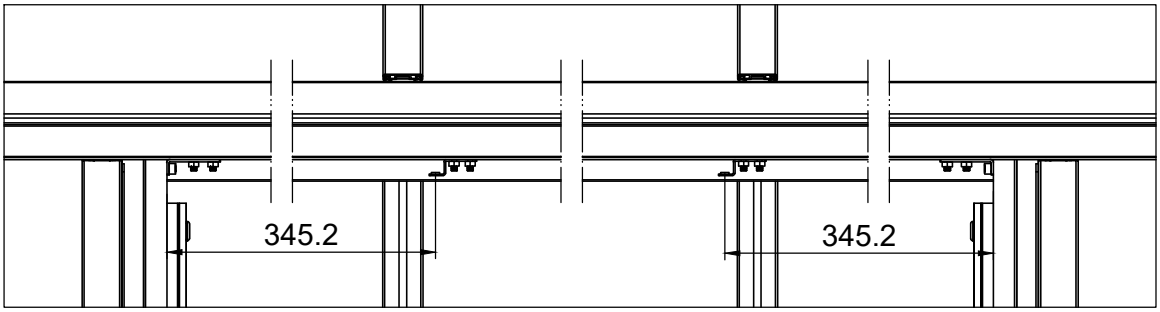

Part	NO.	QTY.	Length(MM)	CTN NO.
	7B26-122	2	PCS	3040P-HD
	Ma6-12	4	PCS	3040P-HD
	M6	4	PCS	3040P-HD

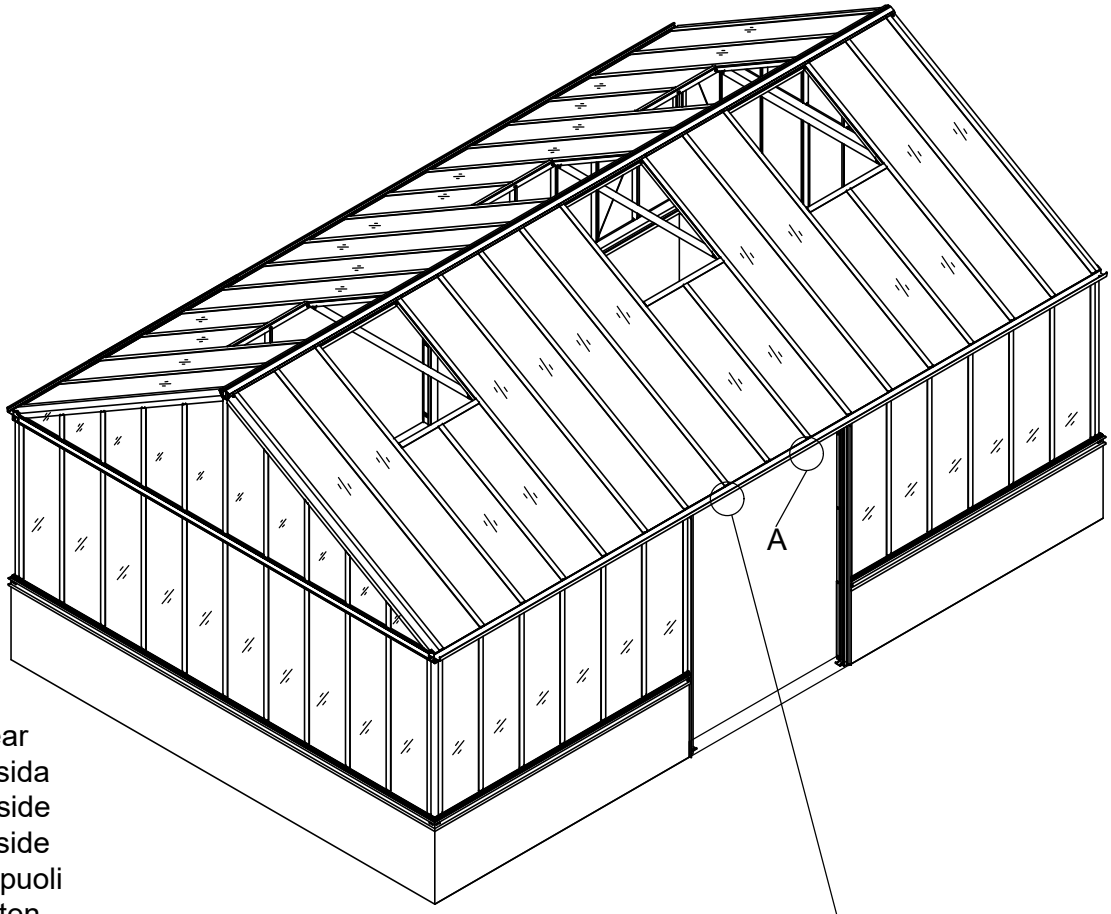

Rear
Baksida
Bagside
Bakside
Takapuoli
Hinten

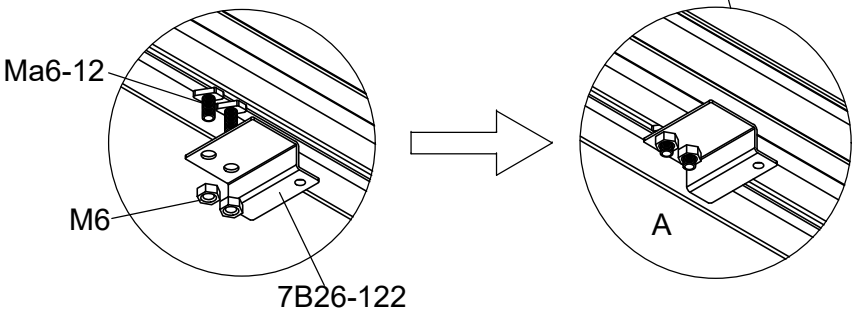

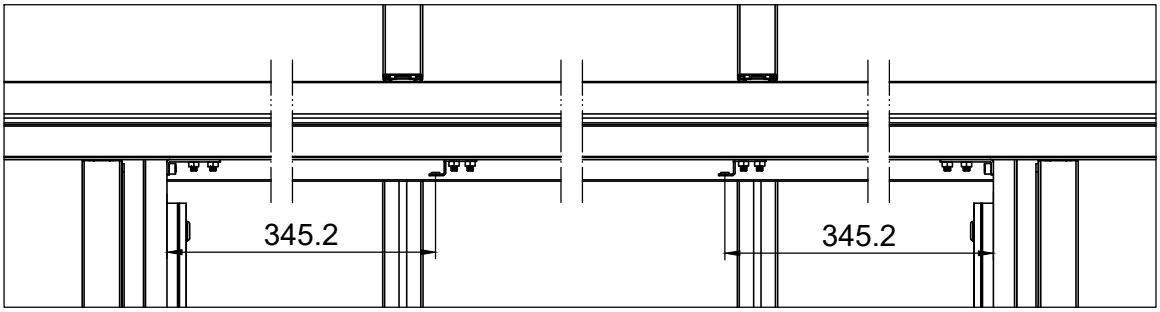

Part	NO.	QTY.	Length(MM)	CTN NO.
	40A-Y103	1	1380	3040P-HD
	40A-Y104	1	1380	3040P-HD
	40A-Y105	1	1380	3040P-HD
	My6-10	4	PCS	3040P-HD
	Si5-16	2	PCS	3040P-HD

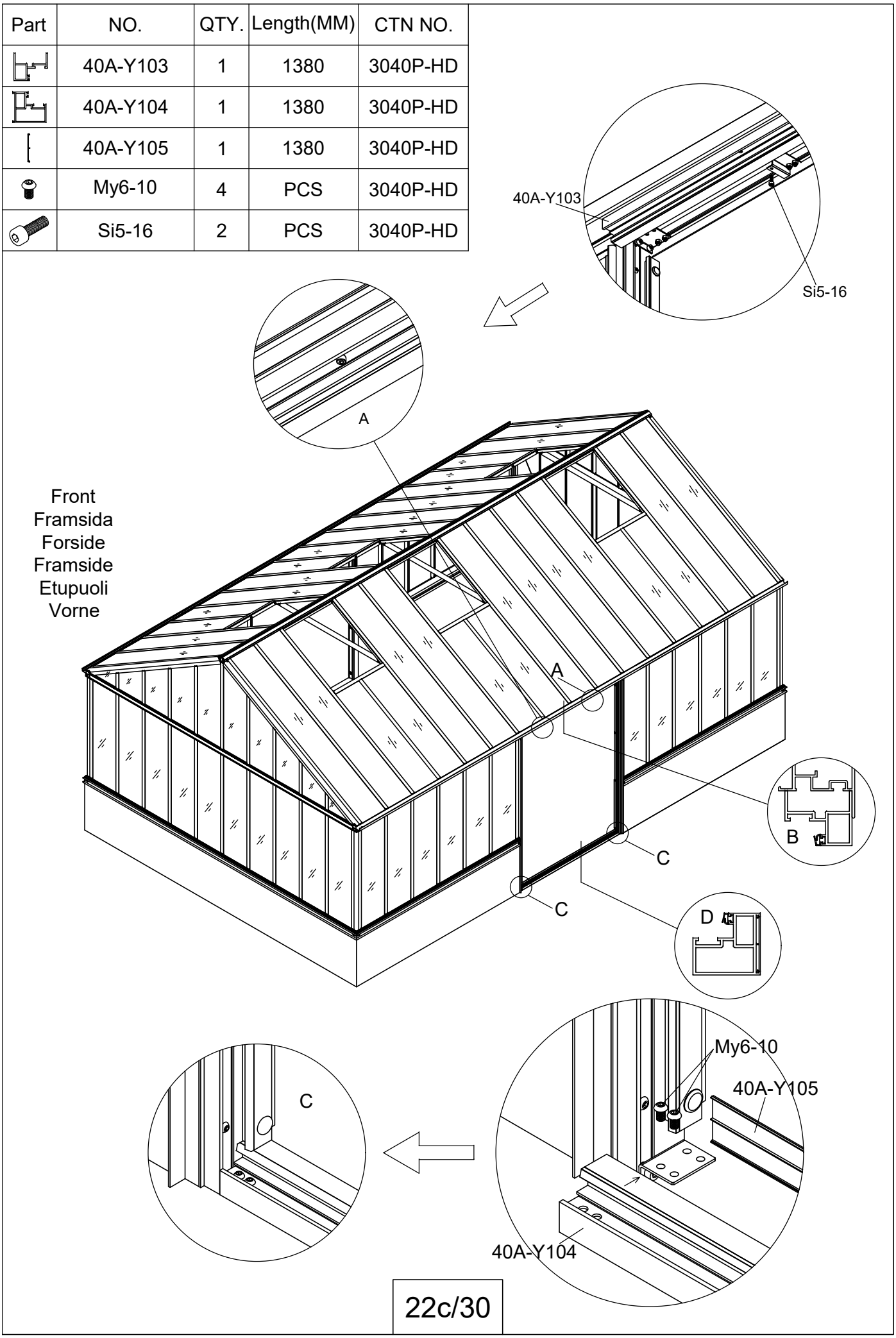

Part	NO.	QTY.	Length(MM)	CTN NO.
	40A-Y103	1	1380	3040P-HD
	40A-Y104	1	1380	3040P-HD
	40A-Y105	1	1380	3040P-HD
	My6-10	4	PCS	3040P-HD
	Si5-16	2	PCS	3040P-HD

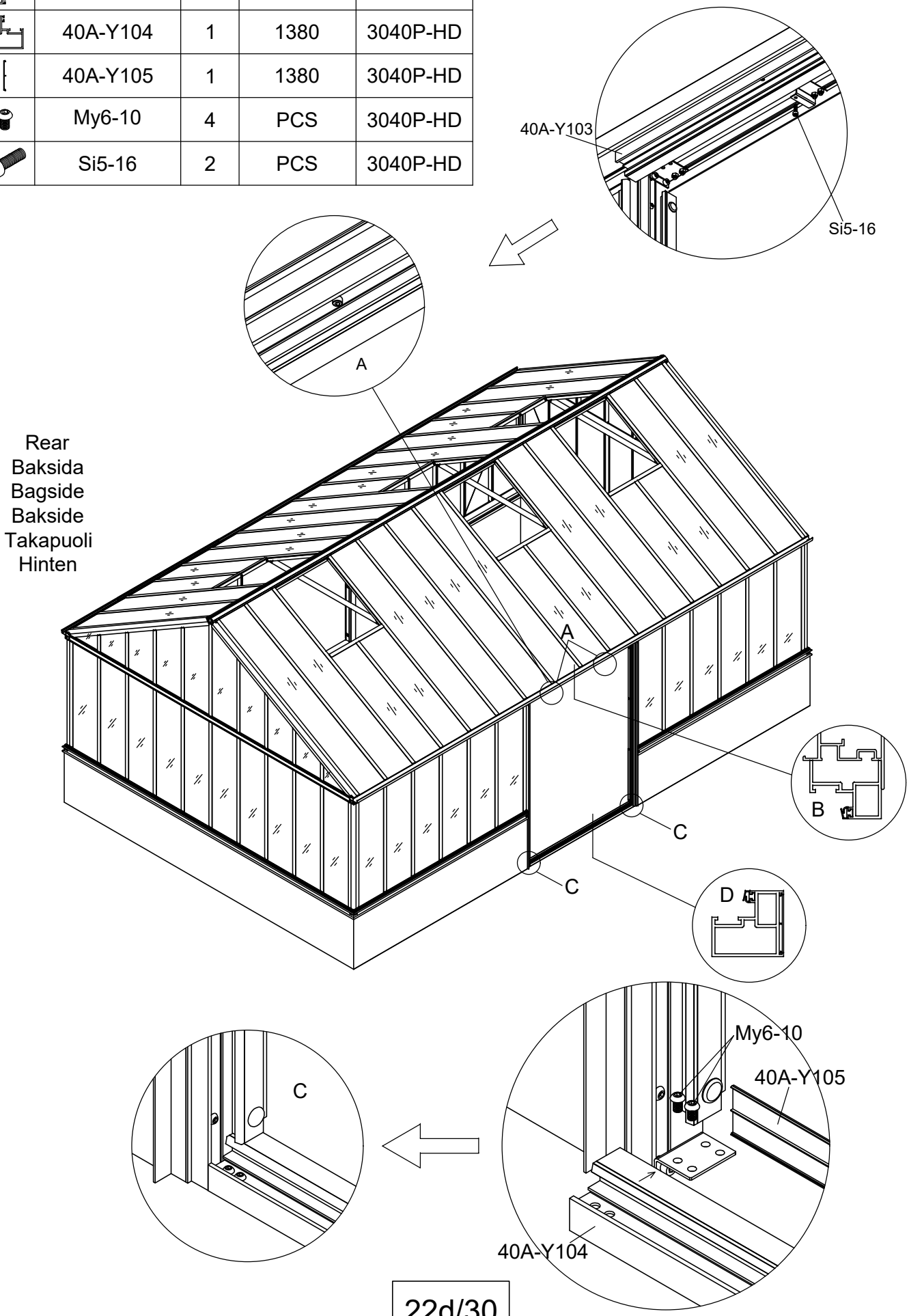

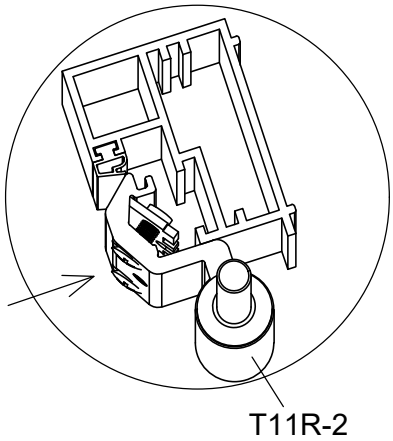

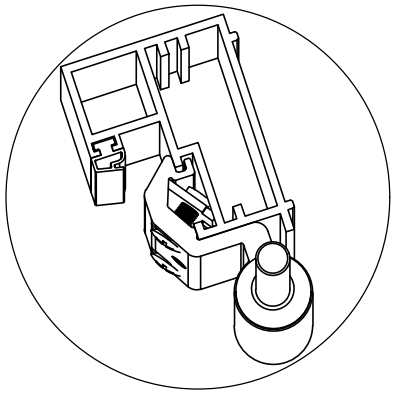

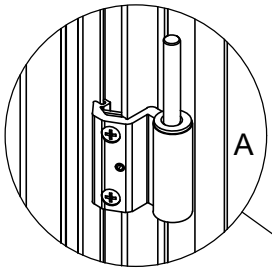

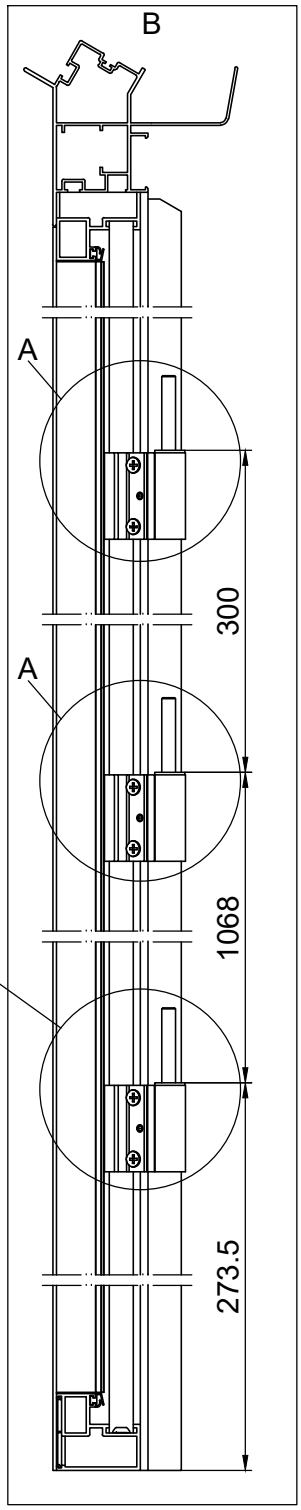

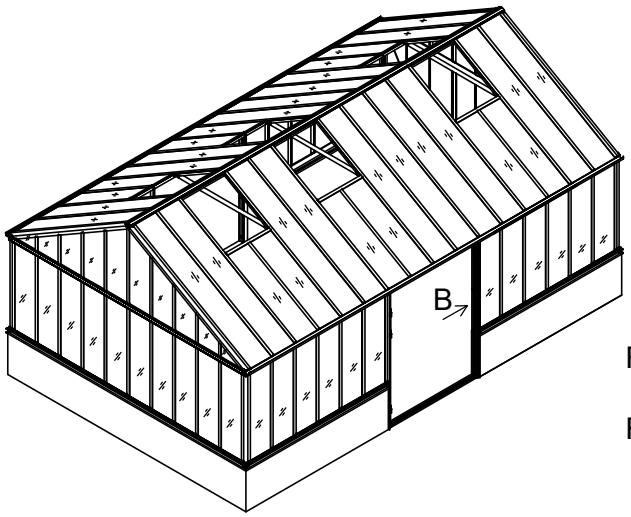

Front
Framsida
Forside
Framside
Etupuoli
Vorne

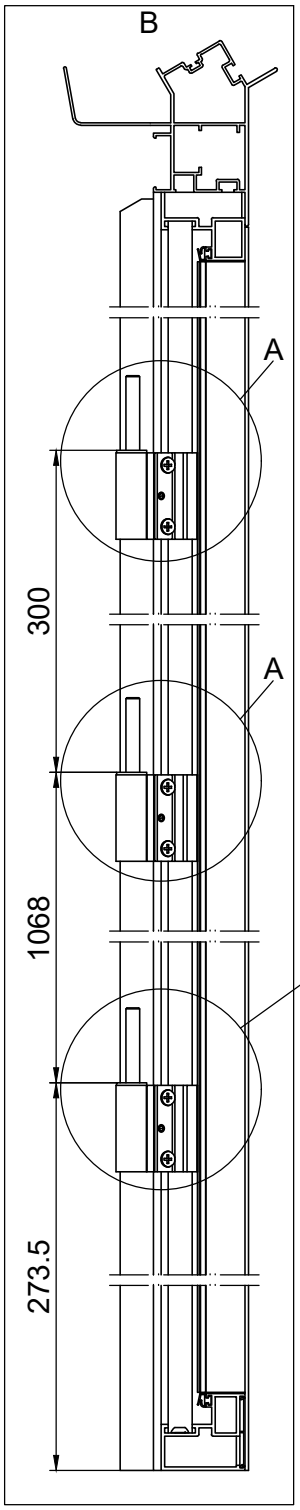
B
A
A
300
1068
273.5

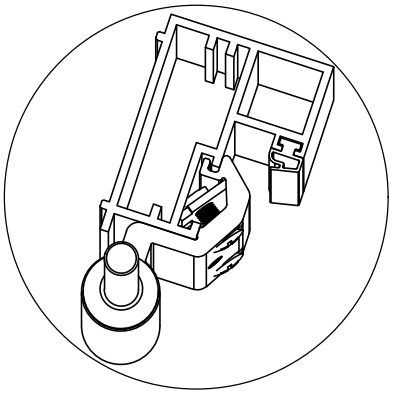

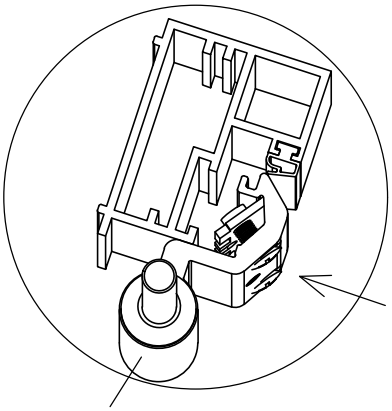
T11L-2

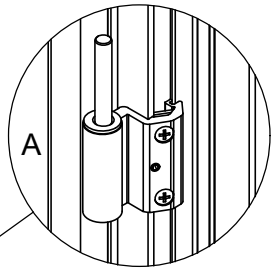
A

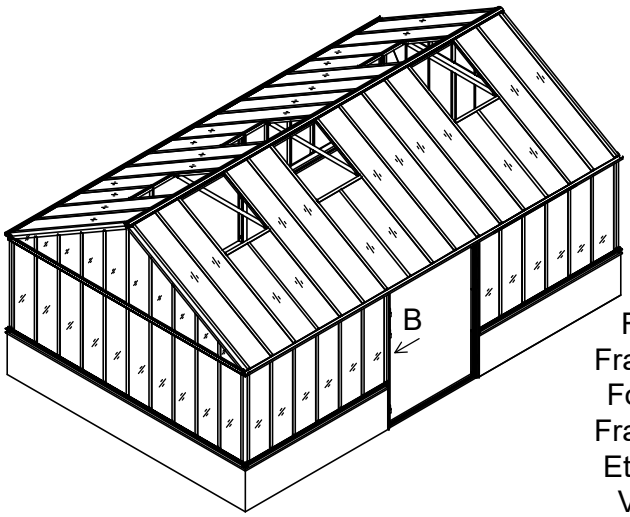
B
Front
Framsida
Forside
Framside
Etupuoli
Vorne

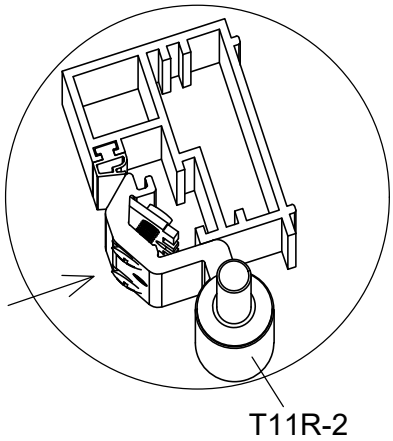

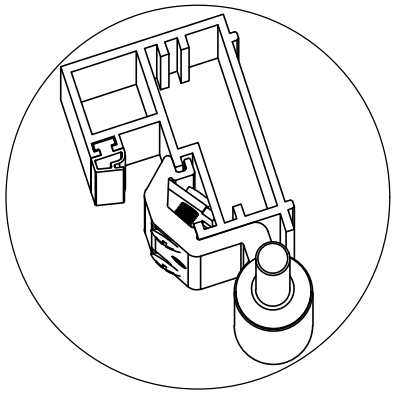

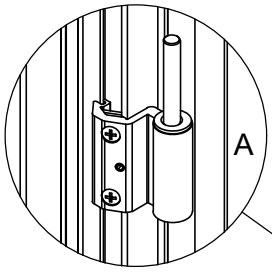

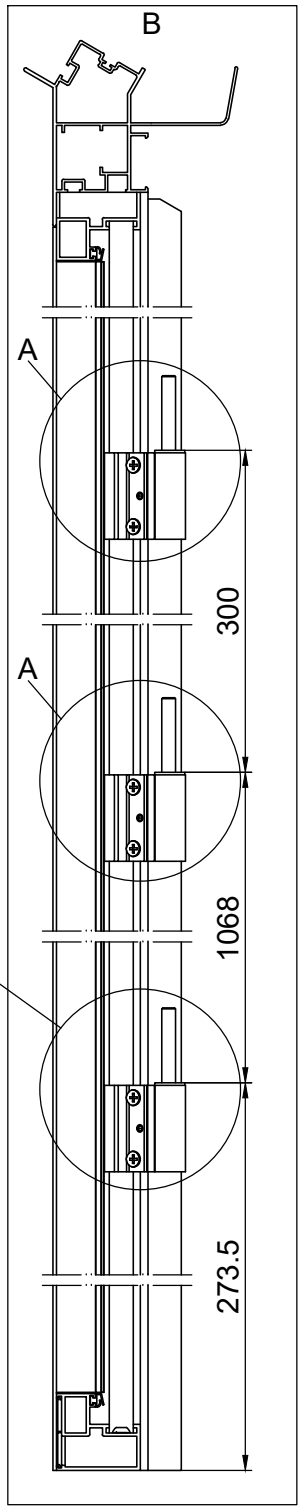

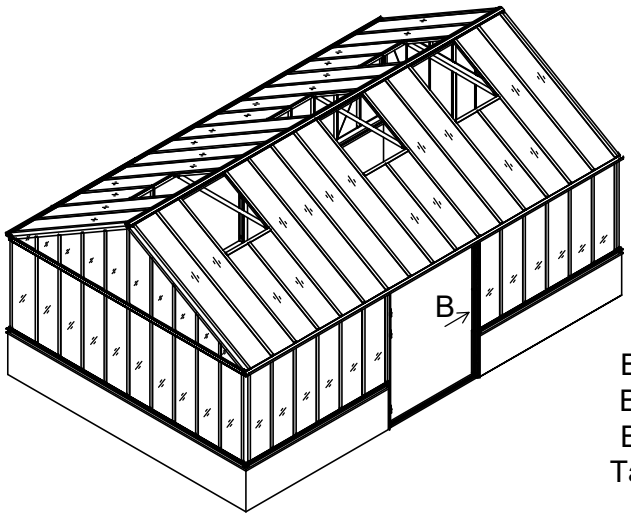

Rear
Baksida
Bagside
Bakside
Takapuoli
Hinten

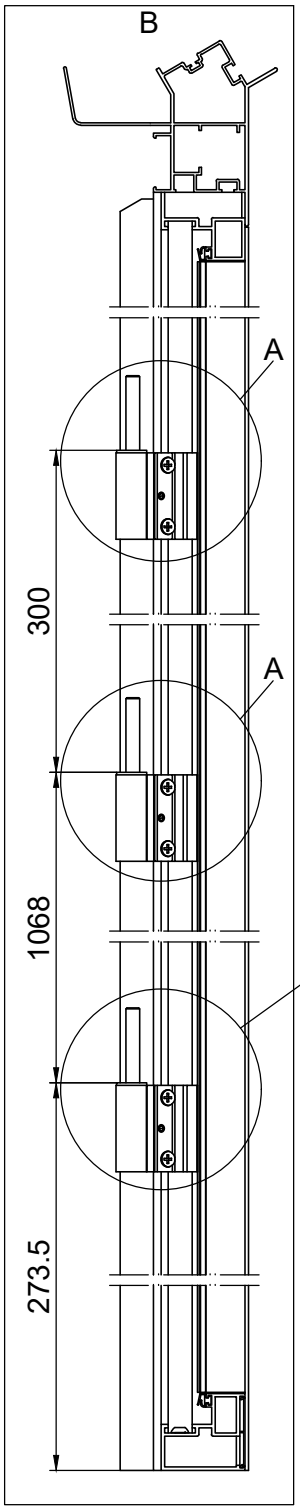

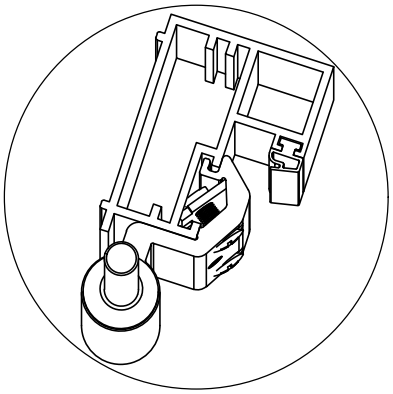

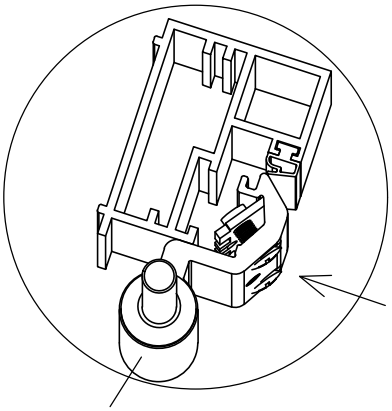

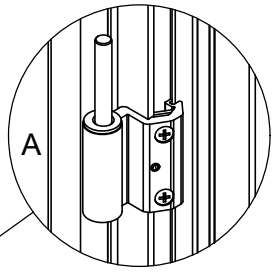

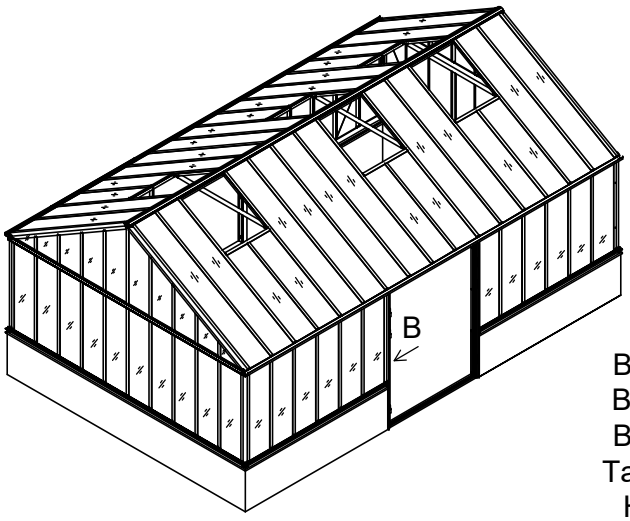

Rear
Baksida
Bagside
Bakside
Takapuoli
Hinten

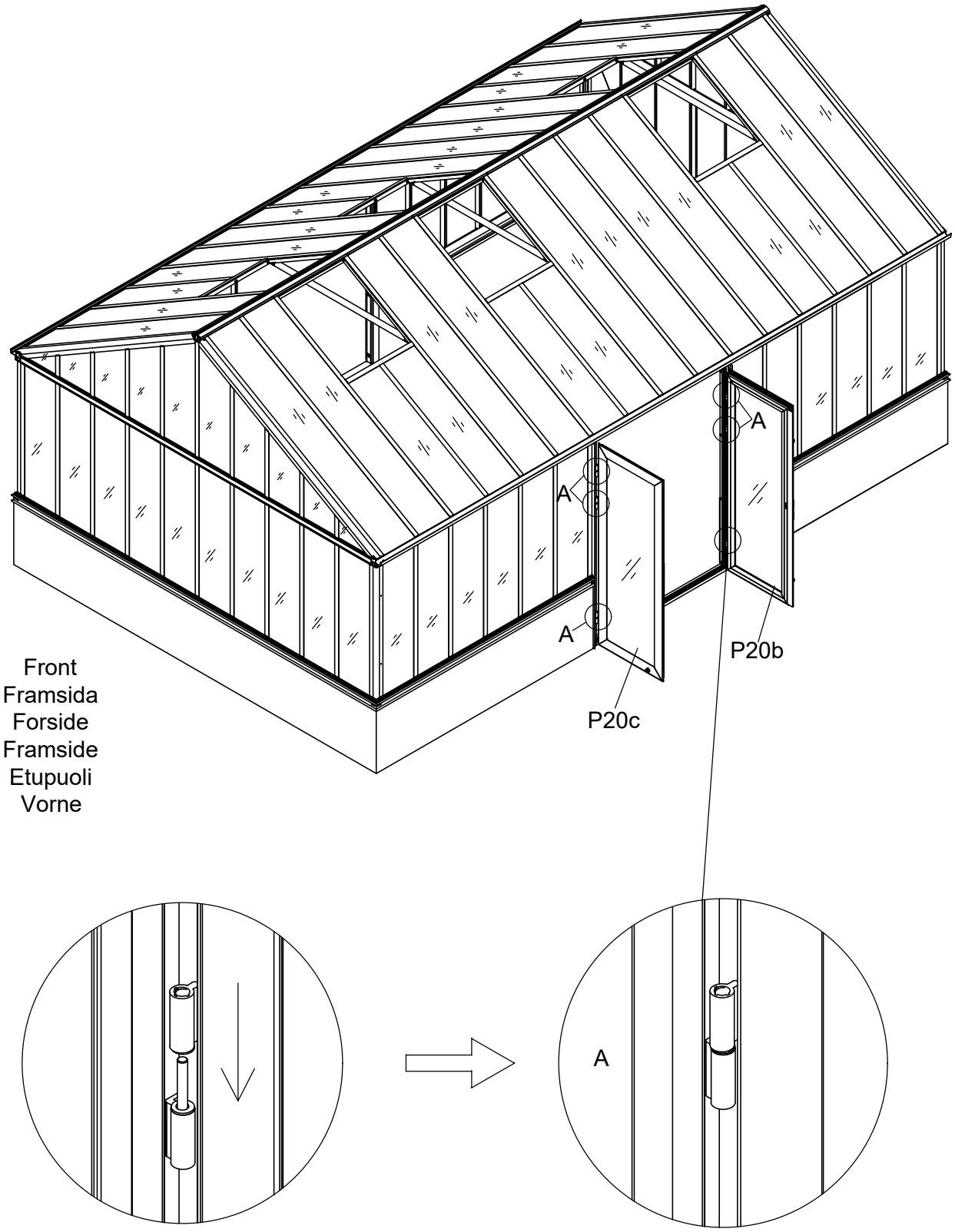
A
A
A
P20b
P20c
Front
Framsida
Forside
Framside
Etupuoli
Vorne
A

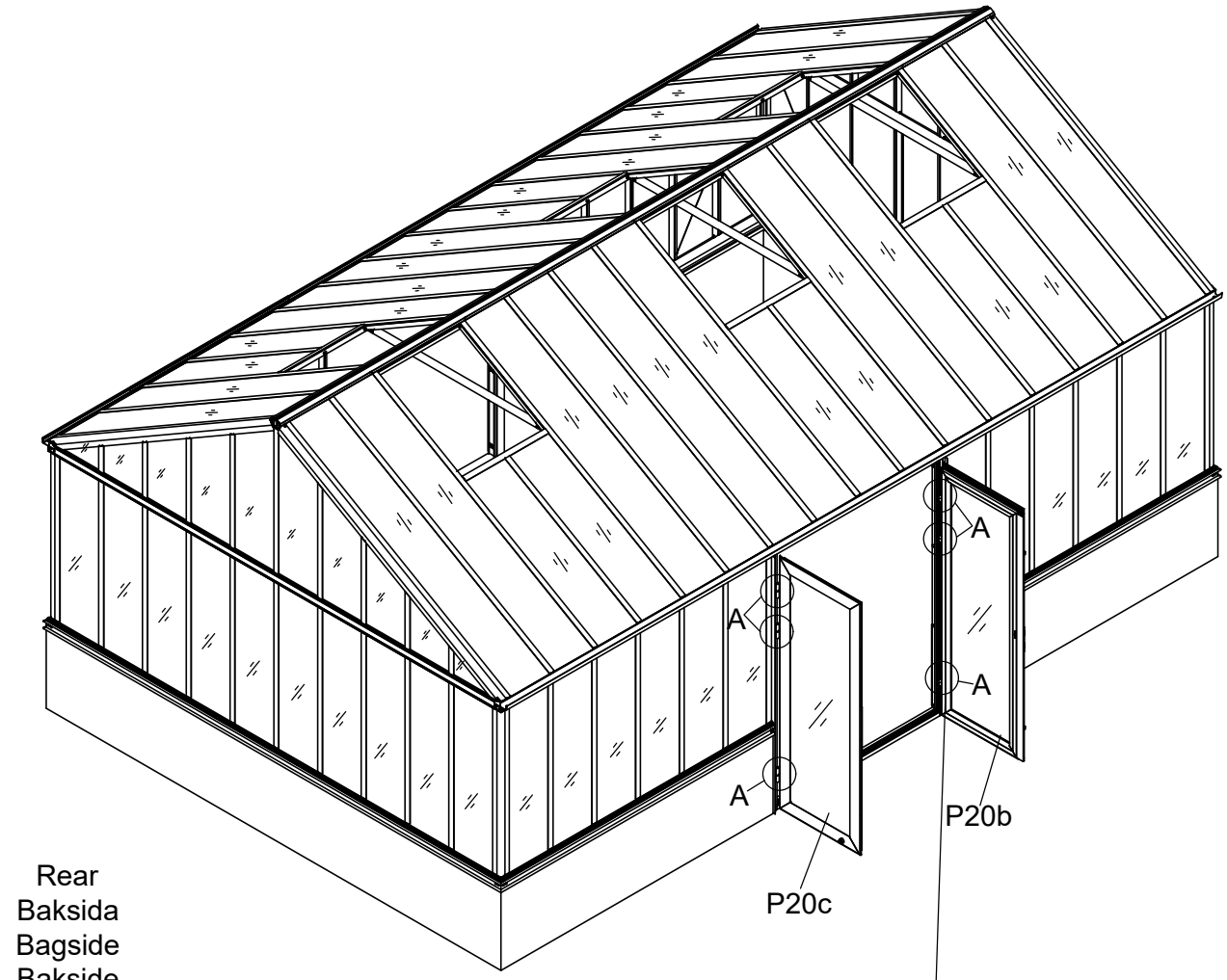

Rear
Baksida
Bagside
Bakside
Takapuoli
Hinten

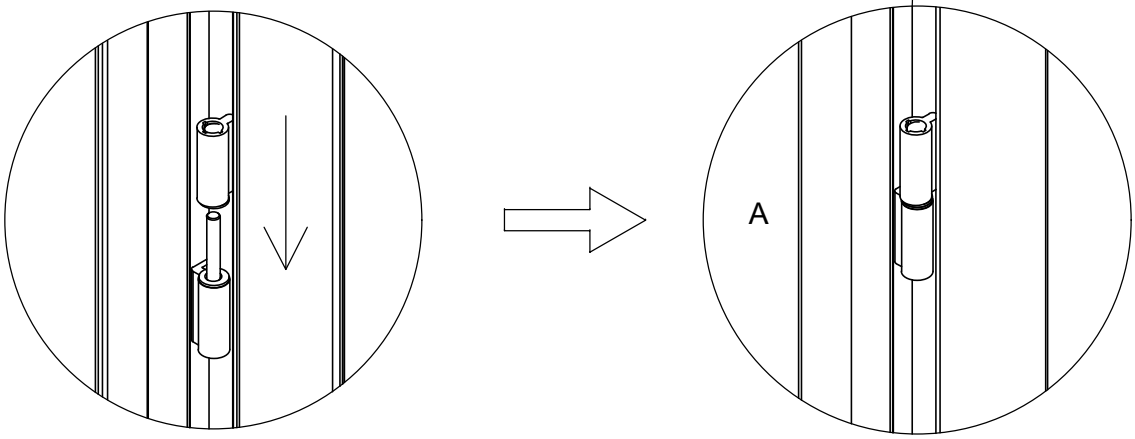

Part	NO.	QTY.	Length(MM)	CTN NO.
	T16	1	PCS	3040P-HD
	7-7-55	1	PCS	3040P-HD
	Mc5-35	2	PCS	3040P-HD

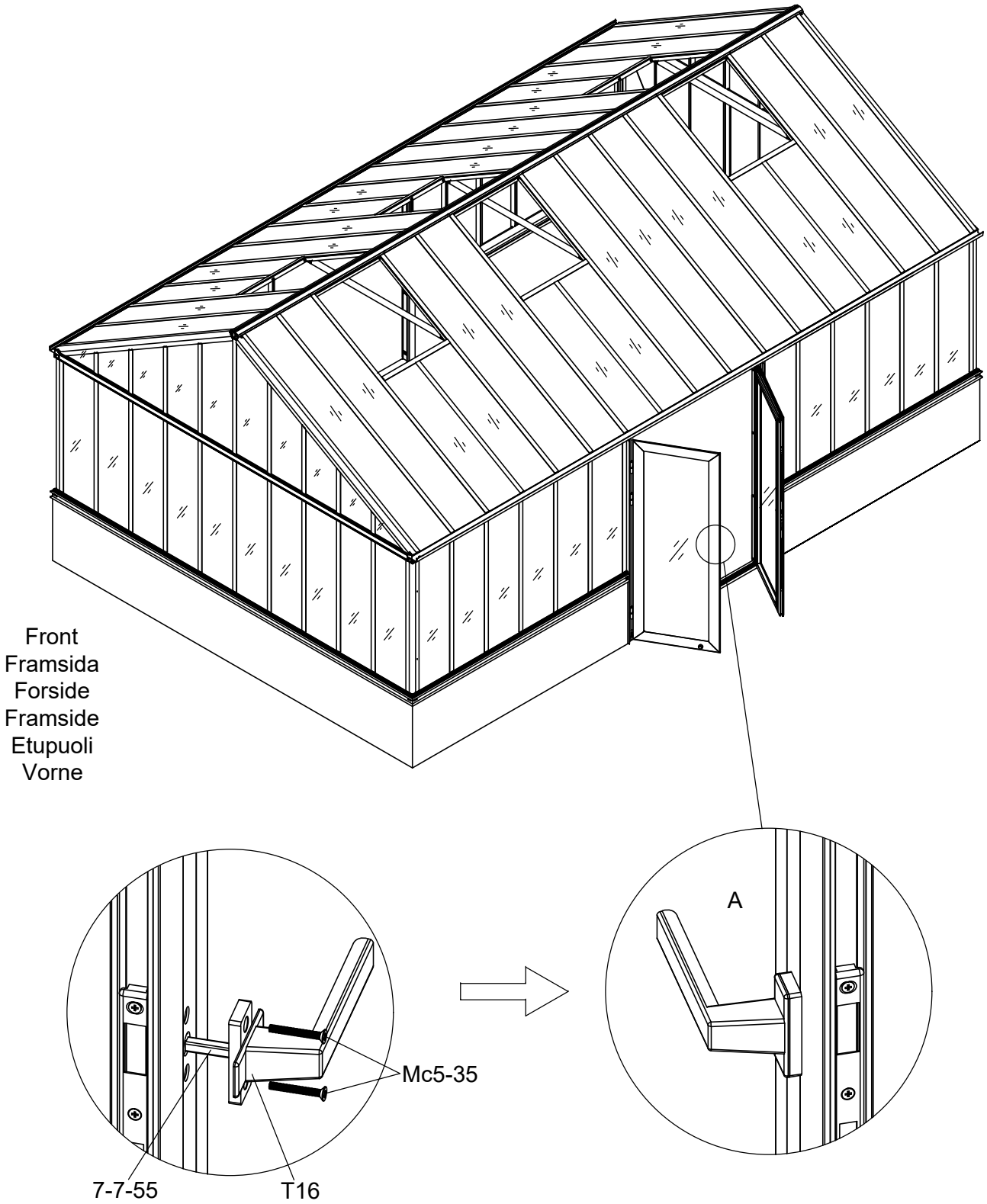

Part	NO.	QTY.	Length(MM)	CTN NO.
	T16	1	PCS	3040P-HD
	7-7-55	1	PCS	3040P-HD
	Mc5-35	2	PCS	3040P-HD

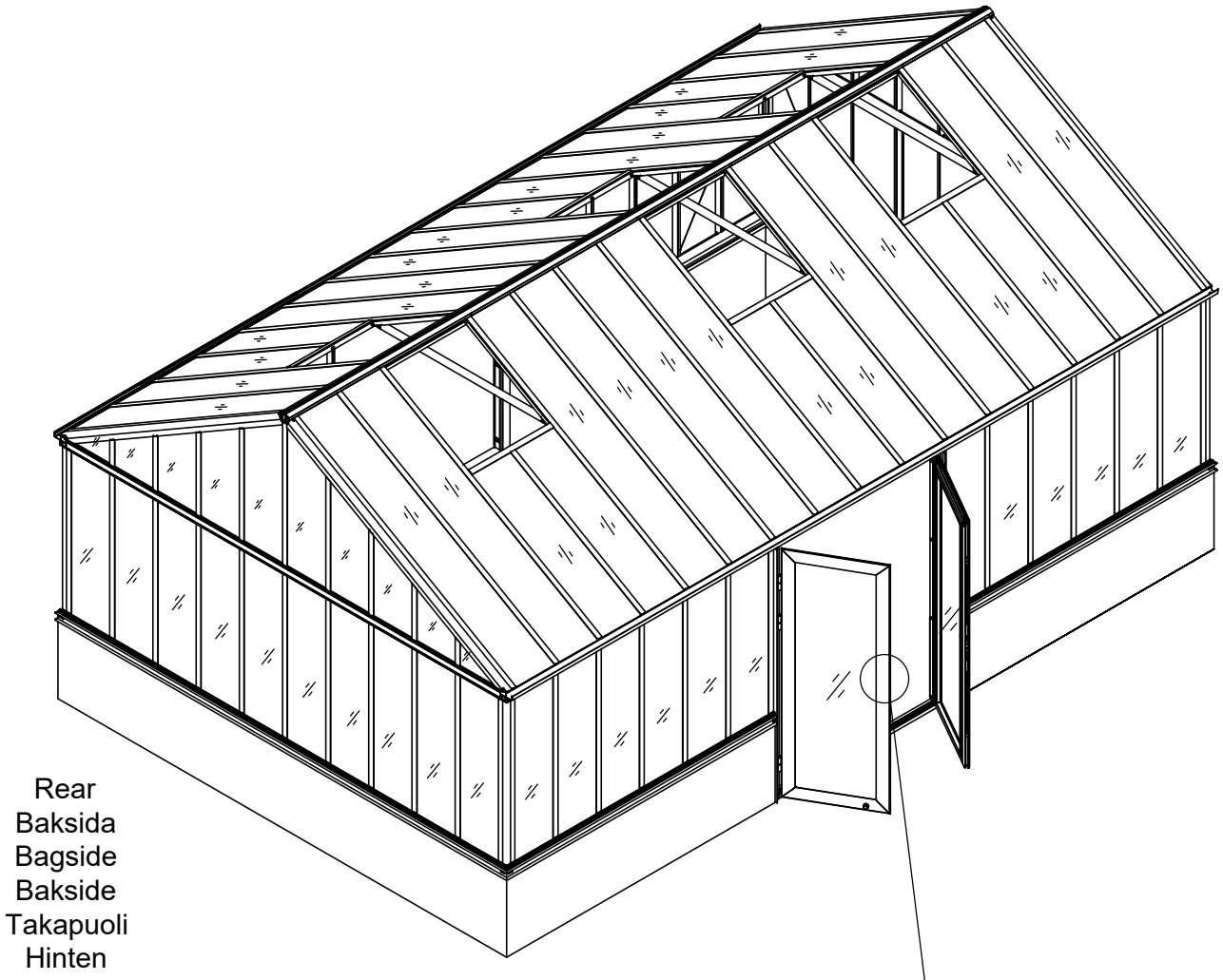

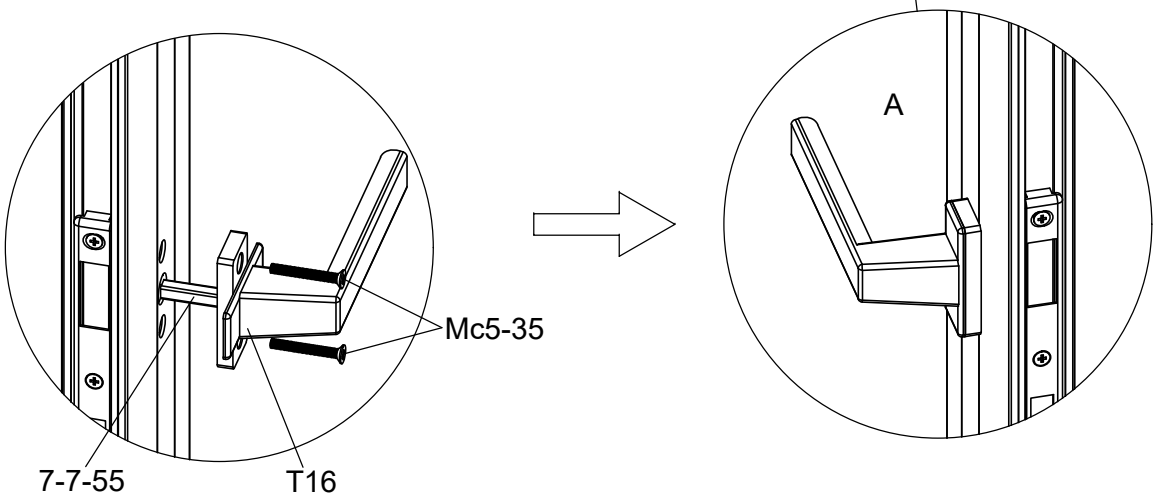

Part	NO.	QTY.	Length(MM)	CTN NO.
	T14-1	1	PCS	3040P-HD
	T14-2	1	PCS	3040P-HD
	8-8-71	1	PCS	3040P-HD
	Mc5-55	2	PCS	3040P-HD

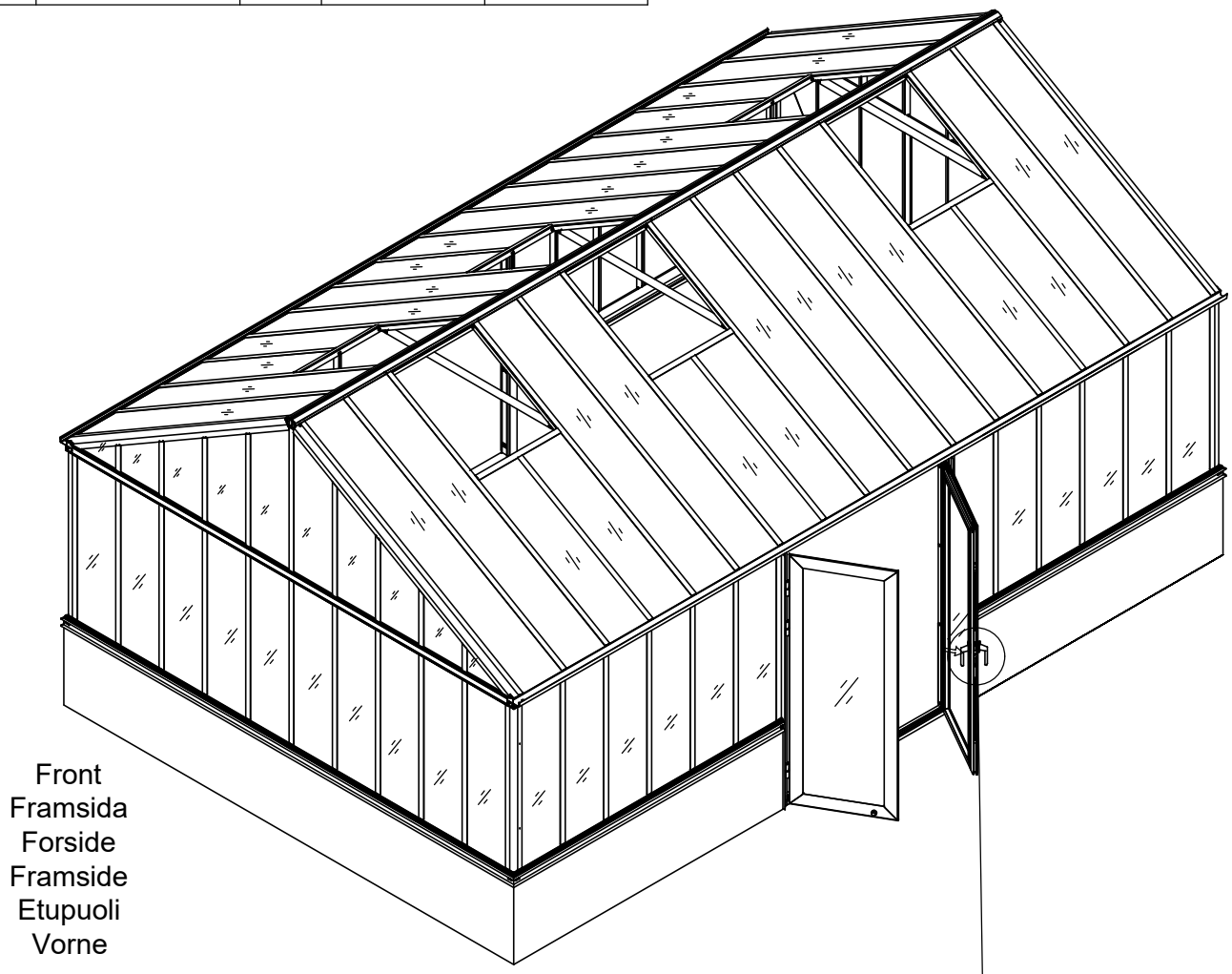

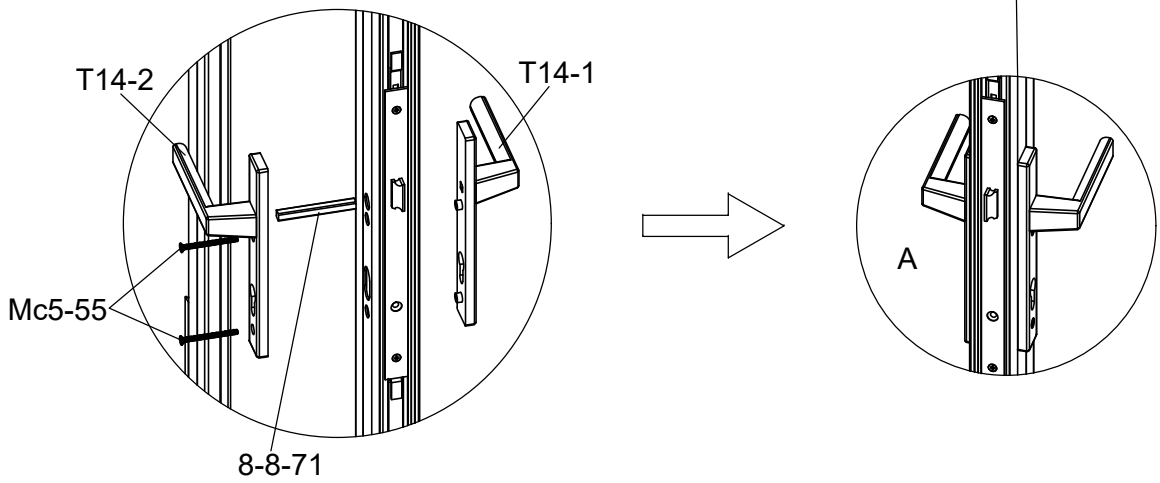

Part	NO.	QTY.	Length(MM)	CTN NO.
	T14-1	1	PCS	3040P-HD
	T14-2	1	PCS	3040P-HD
	8-8-71	1	PCS	3040P-HD
	Mc5-55	2	PCS	3040P-HD

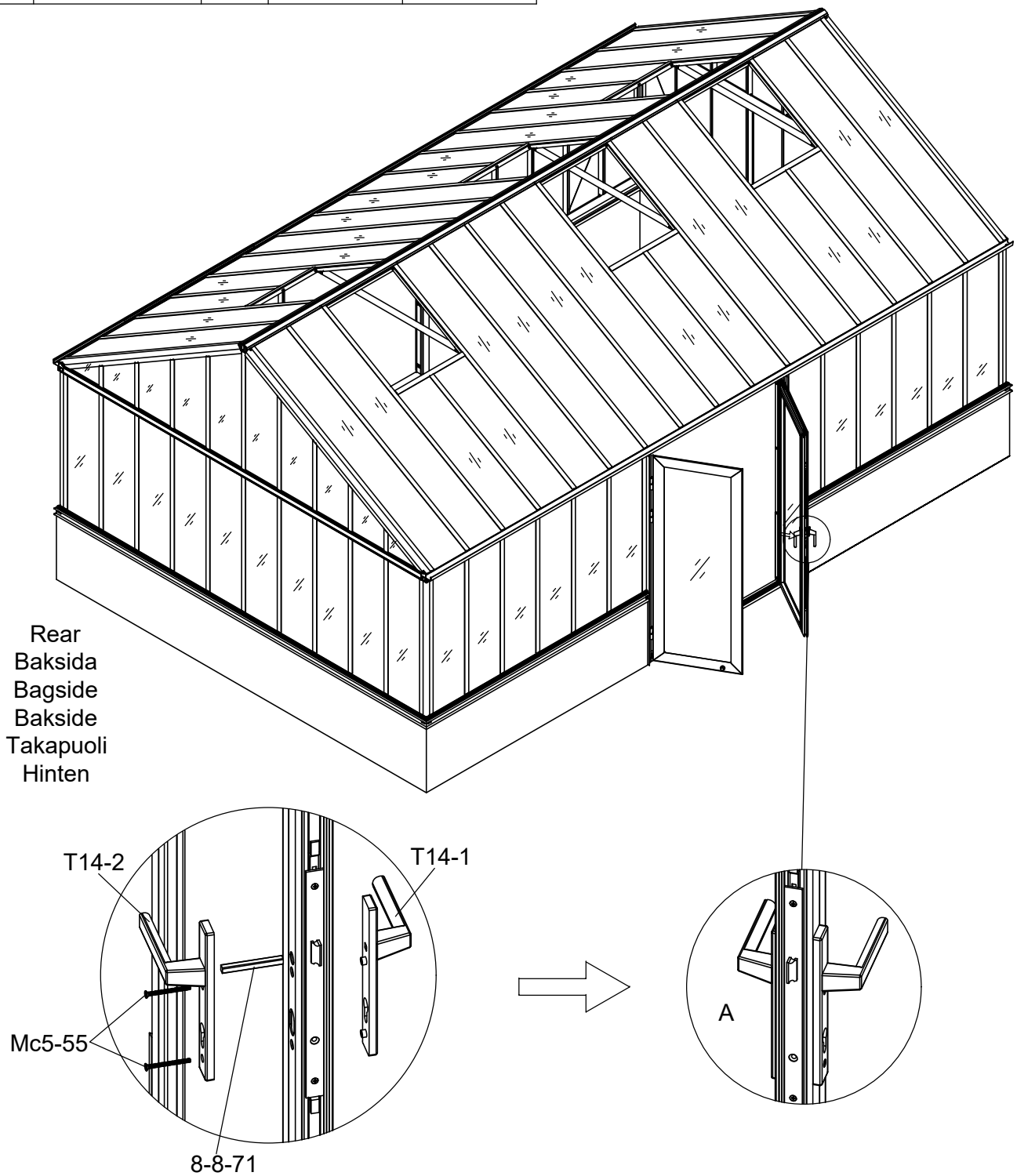

Part	NO.	QTY.	Length(MM)	CTN NO.
	T15	1	PCS	3040P-HD
	Mc5-35A	1	PCS	3040P-HD

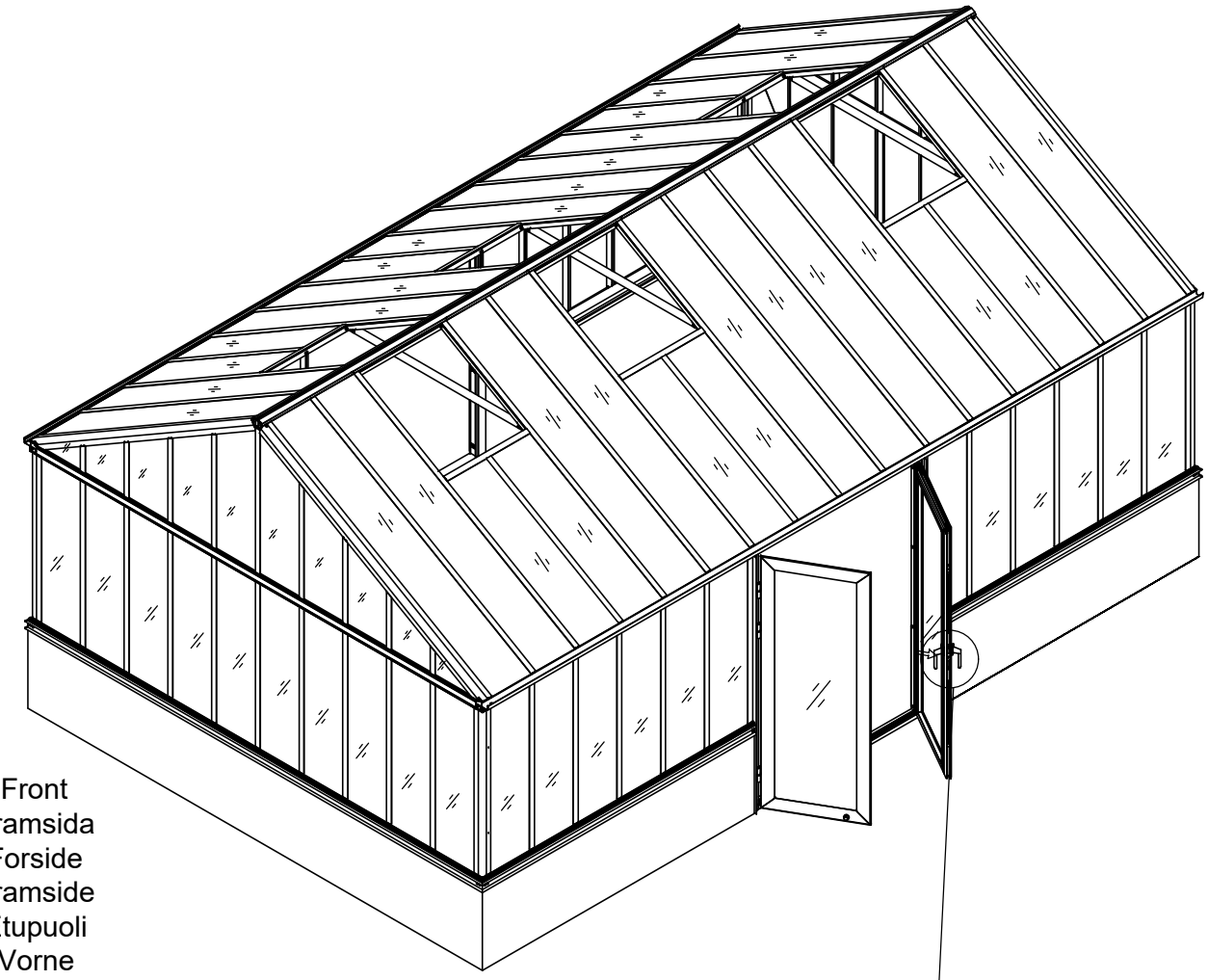

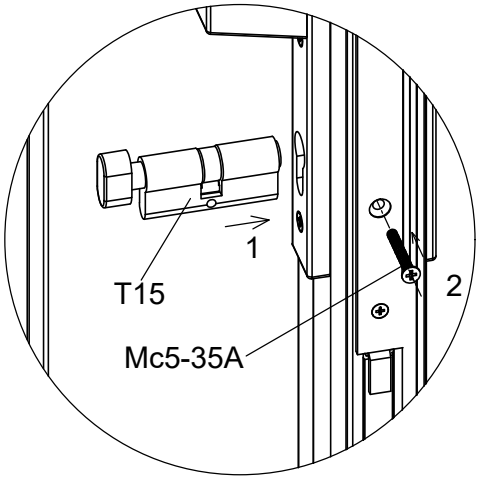

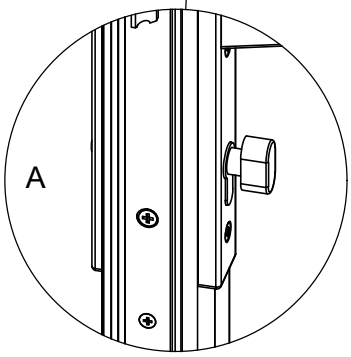

Part	NO.	QTY.	Length(MM)	CTN NO.
	T15	1	PCS	3040P-HD
	Mc5-35A	1	PCS	3040P-HD

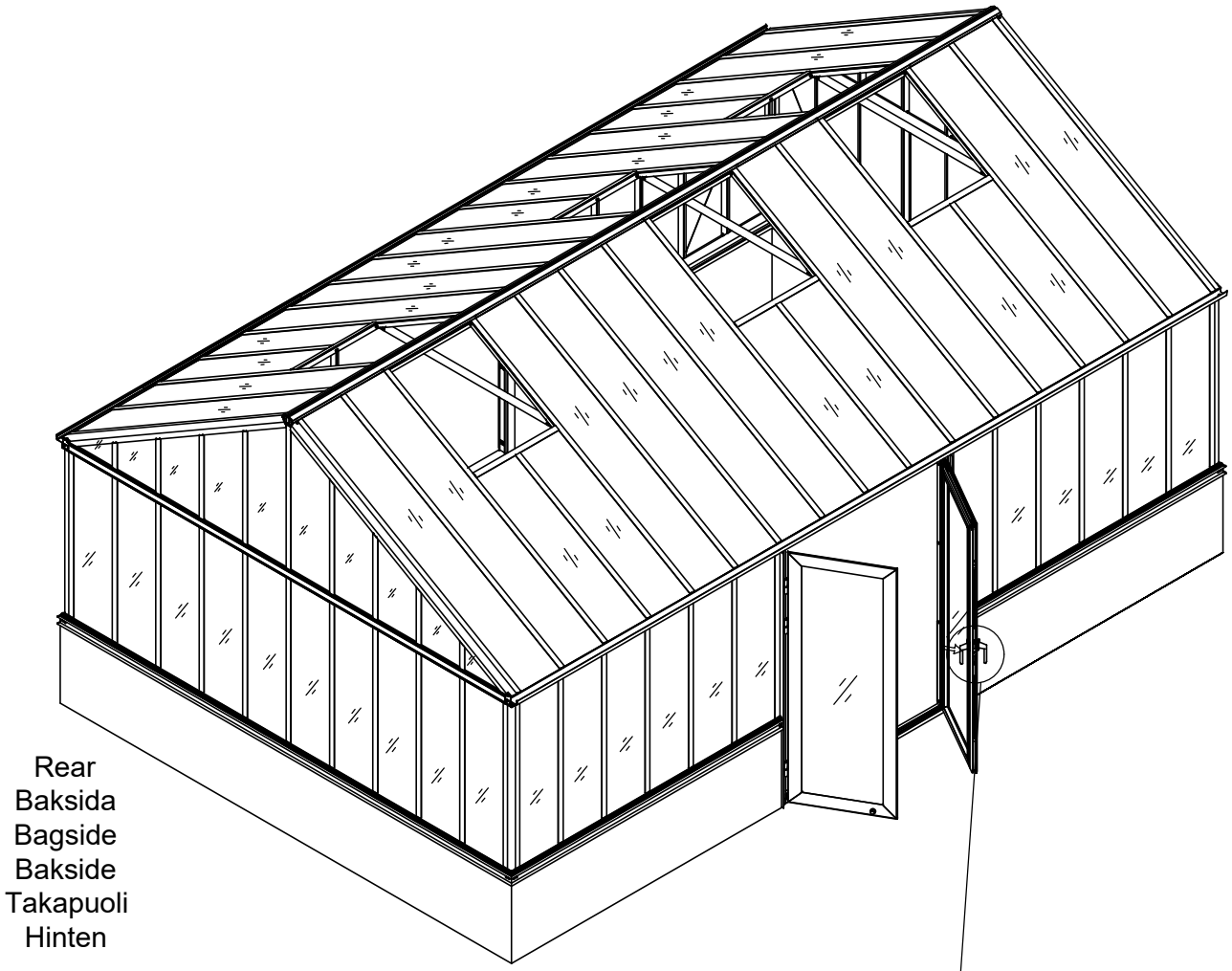

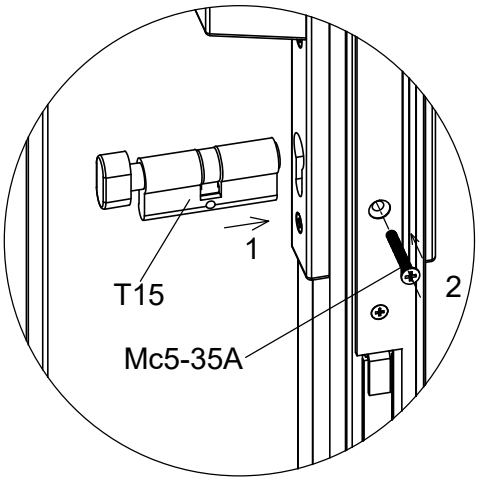

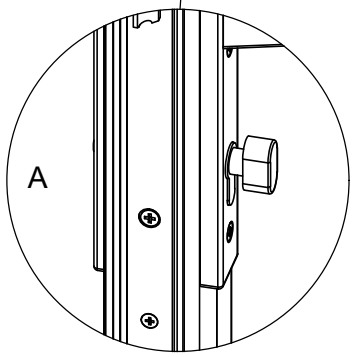

Part	NO.	QTY.	Length(MM)	CTN NO.
	T21	2	PCS	3040P-HD
	J07-A	6	PCS	3040P-HD
	Za4.2-38	6	PCS	3040P-HD

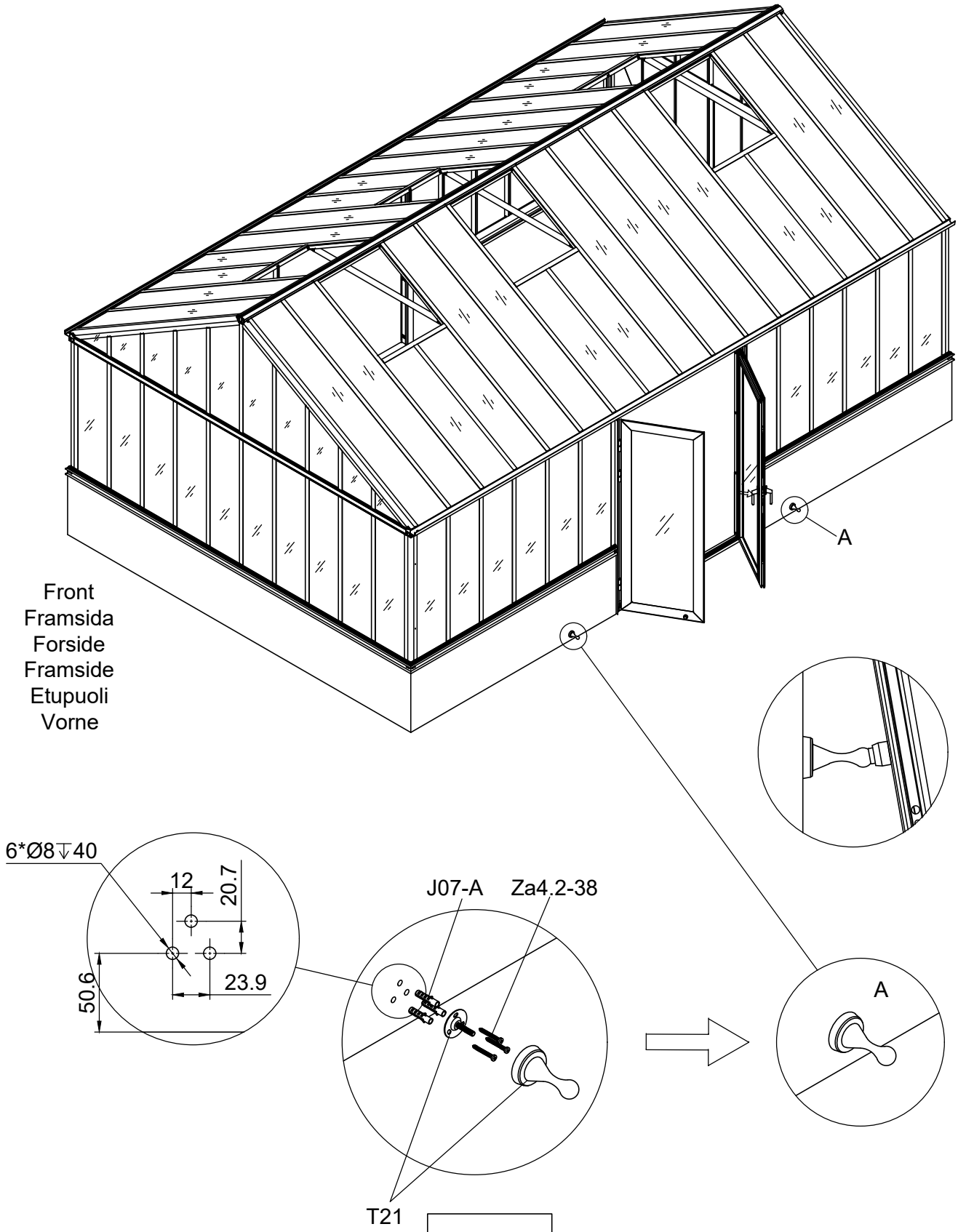

Part	NO.	QTY.	Length(MM)	CTN NO.
	T21	2	PCS	3040P-HD
	J07-A	6	PCS	3040P-HD
	Za4.2-38	6	PCS	3040P-HD

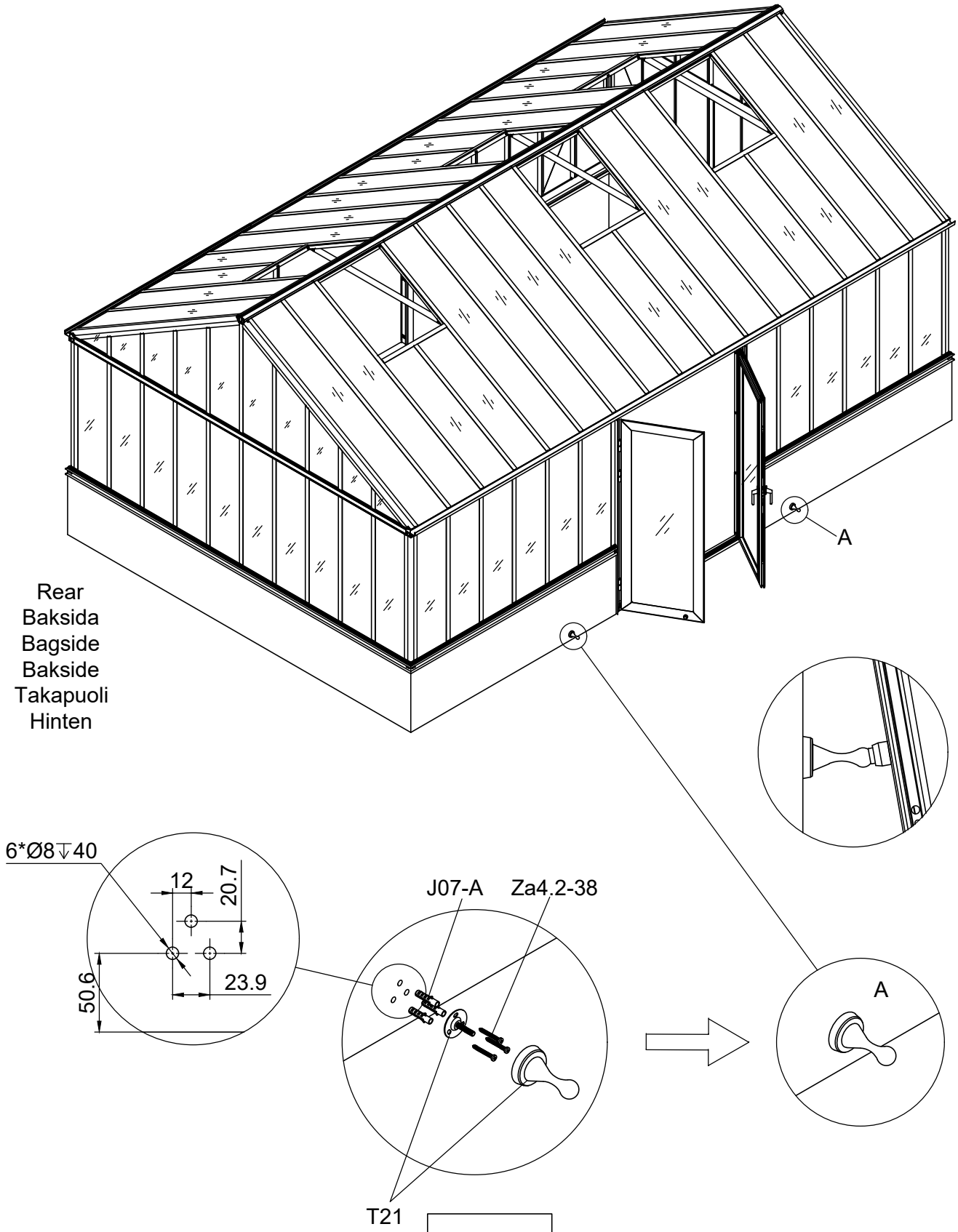

Adjust as shown below if the door gap is too narrow or wide.
Justera enligt nedan om dörrspringan är för trång eller stor.
Justér som nedenfor, hvis dørspalten er for smal eller bred.
Juster som vist under hvis dørglippen er for trang eller stor.
Säädä alla olevan mukaisesti, jos oven rako on liian kapea tai leveä.
Wie unten gezeigt einstellen, falls der Türspalt zu eng oder zu weit ist.

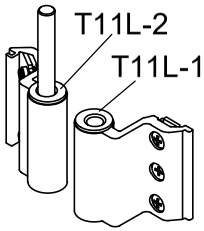	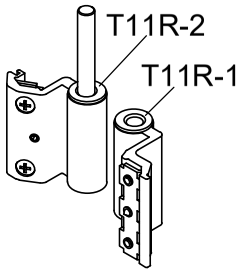			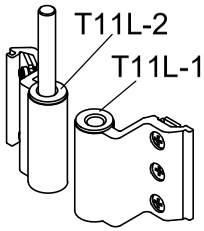	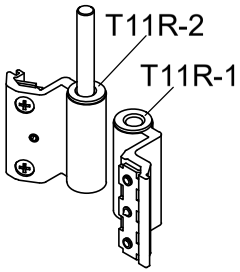			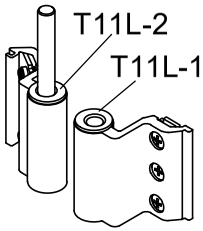	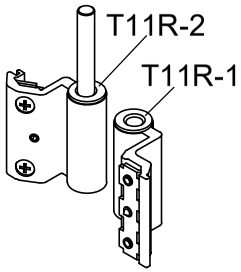	
T11L-2 -◯+ T11L-1 +◯-	+◯- T11R-2 -◯+ T11R-1	+2MM		T11L-2 -◯+ T11L-1 -◯+	+◯- T11R-2 +◯- T11R-1	0MM		T11L-2 +◯- T11L-1 ◯+	-◯+ T11R-2 ◯+ T11R-1	-1MM
T11L-2 +◯- T11L-1 +◯-	+◯- T11R-2 -◯+ T11R-1	+1MM		T11L-2 +◯- T11L-1 +◯-	-◯+ T11R-2 -◯+ T11R-1	0MM		T11L-2 +◯- T11L-1 -◯+	+◯- T11R-2 +◯- T11R-1	-1MM
T11L-2 -◯+ T11L-1 ◯+	+◯- T11R-2 ◯+ T11R-1	+1MM		T11L-2 +◯- T11L-1 ◯+	+◯- T11R-2 ◯+ T11R-1	0MM		T11L-2 +◯- T11L-1 -◯+	-◯+ T11R-2 +◯- T11R-1	-2MM

Part	NO.	QTY.				Length(MM)	CTN NO.
		3054	3055	3056	3057		
	40X-Y80E-A	4	4	6	6	801	
	40X-Y81E	8	8	12	12	882	
	W06	16	16	24	24	46	
	W04	16	16	24	24	PCS	
	782×863	4	4	6	6	863	
	MCJT002	8	8	12	12	12	
	40X-Y82E-A	4	4	4	4	801	3149P-S
	40X-Y82E-A	0	0	2	2	801	3149P-S-2

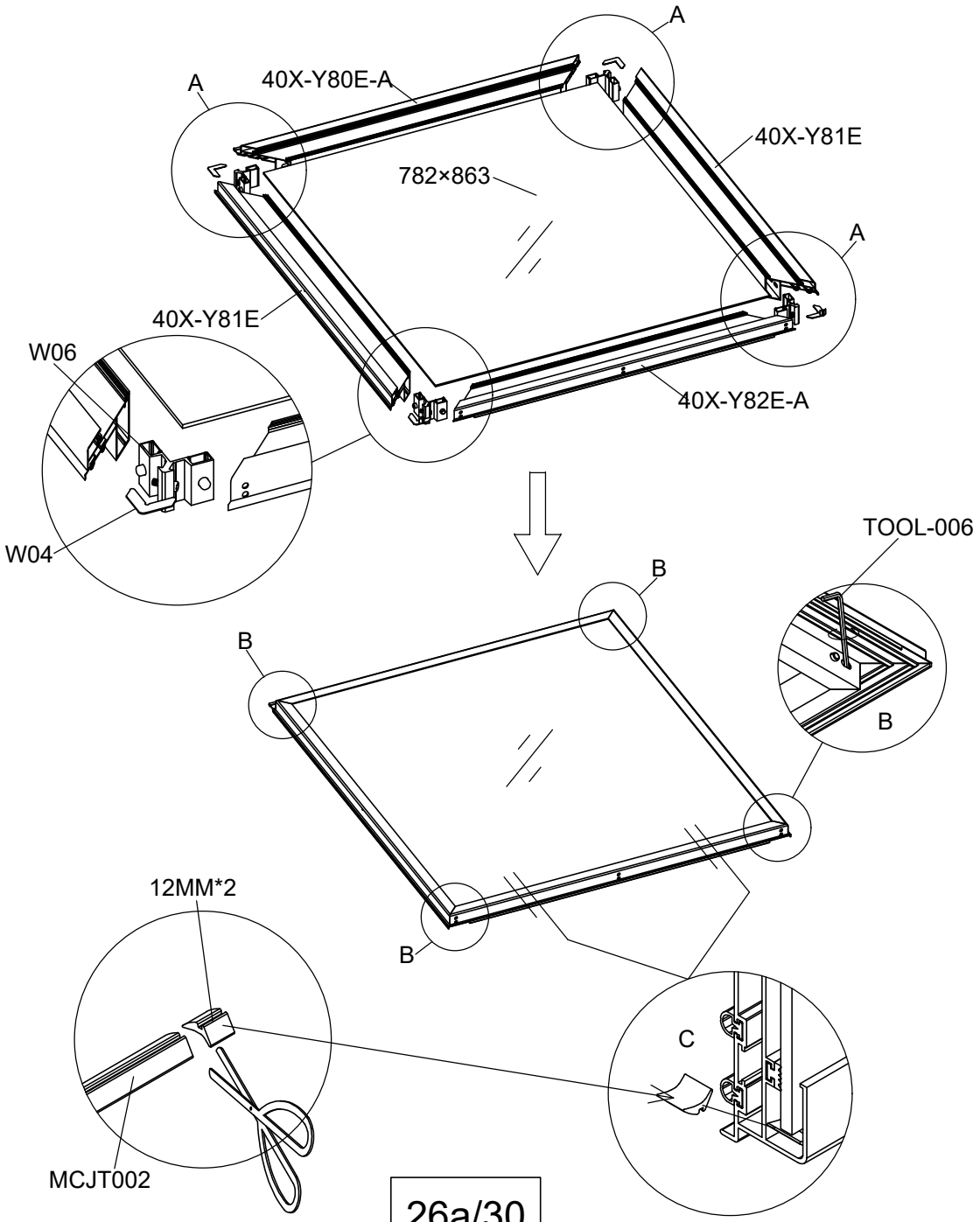

Part	NO.	QTY.				Length(MM)
		3054	3055	3056	3057	
	MCJT002	14M	14M	21M	21M	
	J09	32	32	48	48	PCS

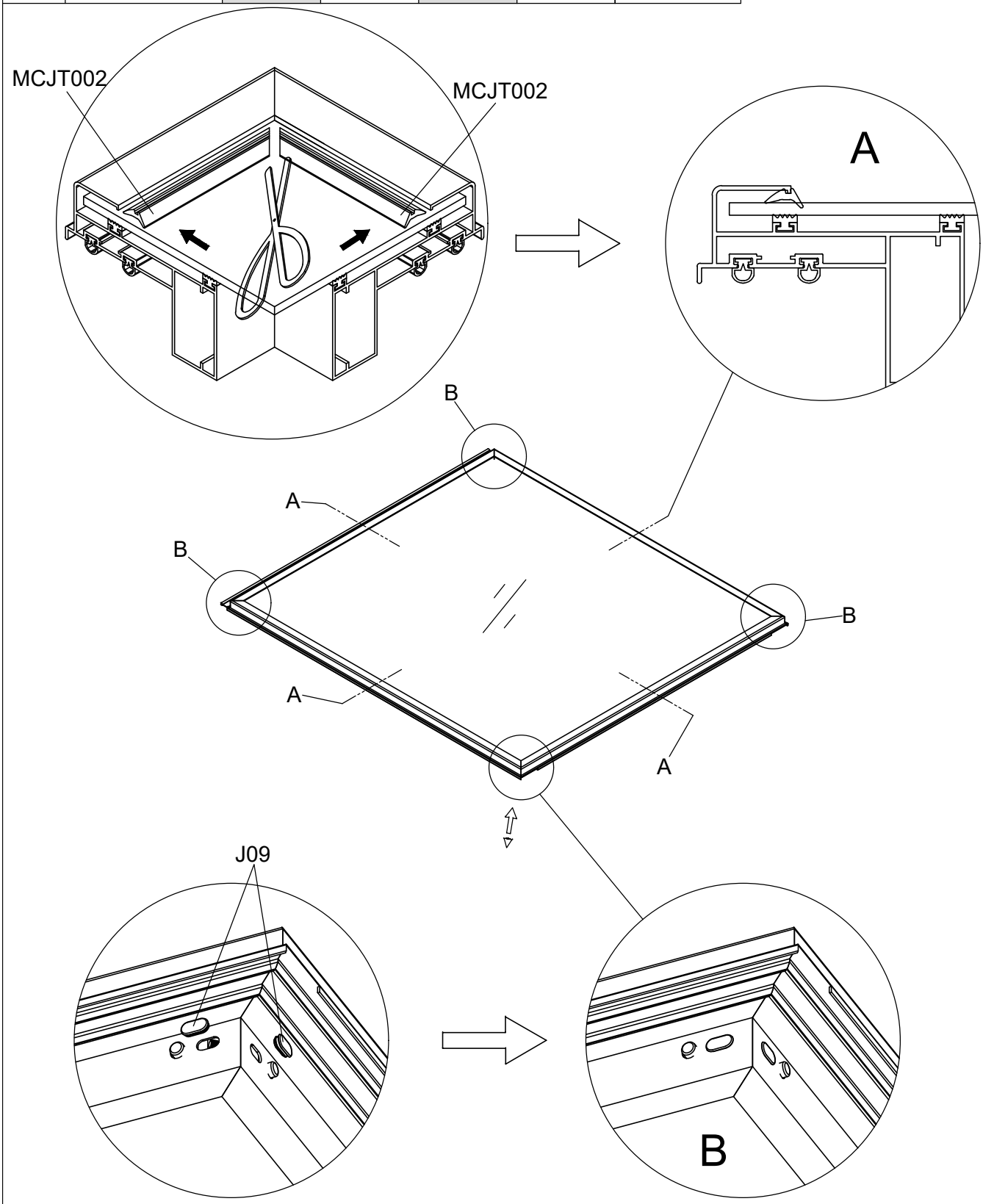

Part	NO.	QTY.				Length(MM)
		3054	3055	3056	3057	
	T07	8	8	8	8	PCS

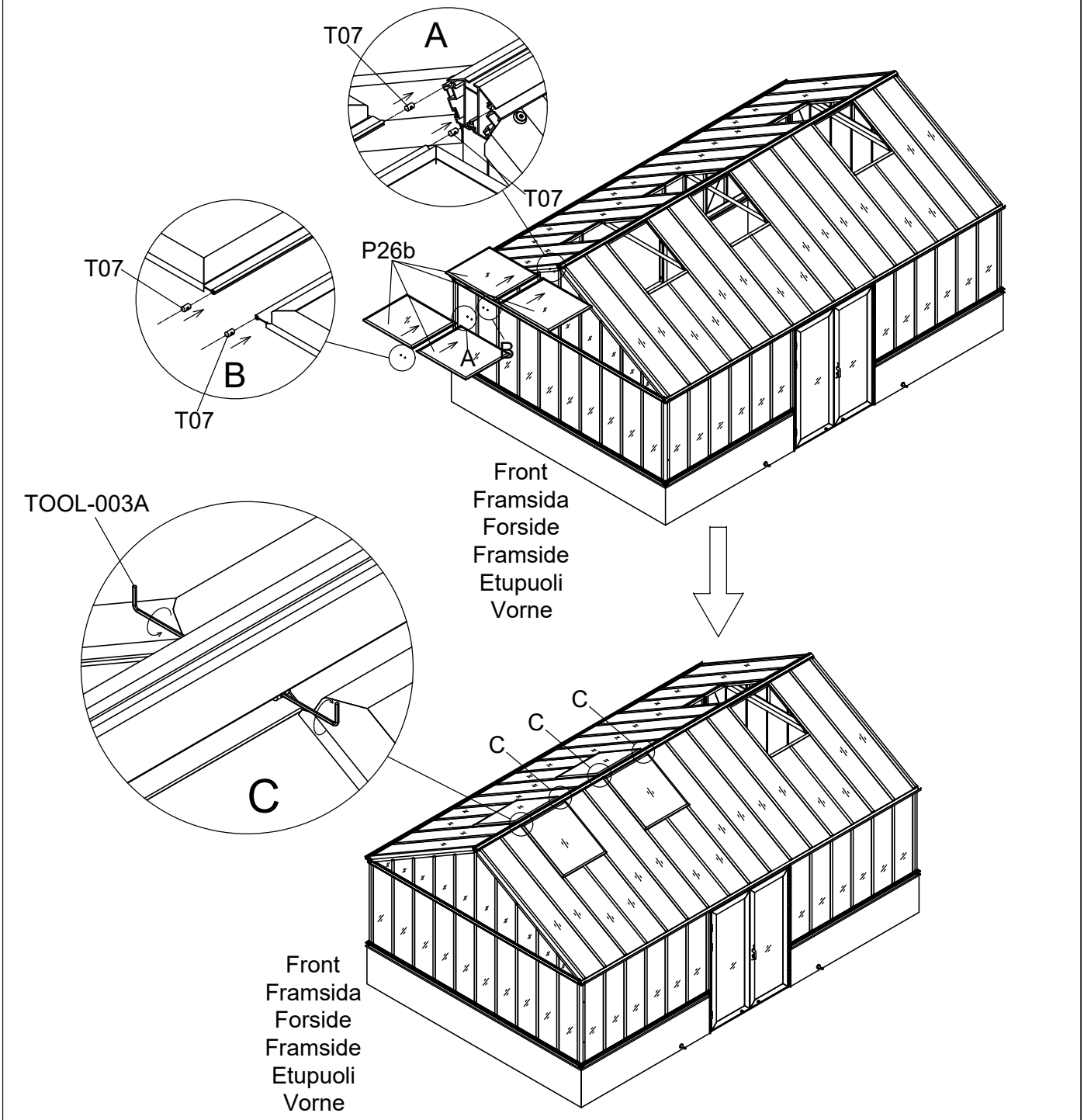

3054	3055	3056	3057
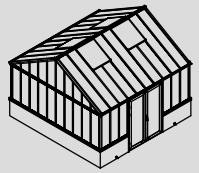	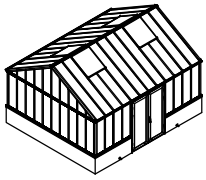	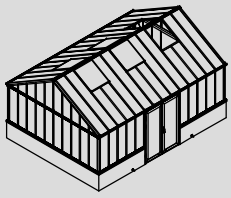	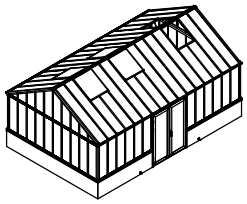

Part	NO.	QTY.		Length(MM)
		3056	3057	
	T07	4	4	PCS

3056	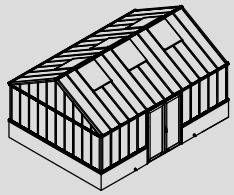
3057	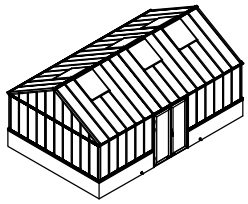

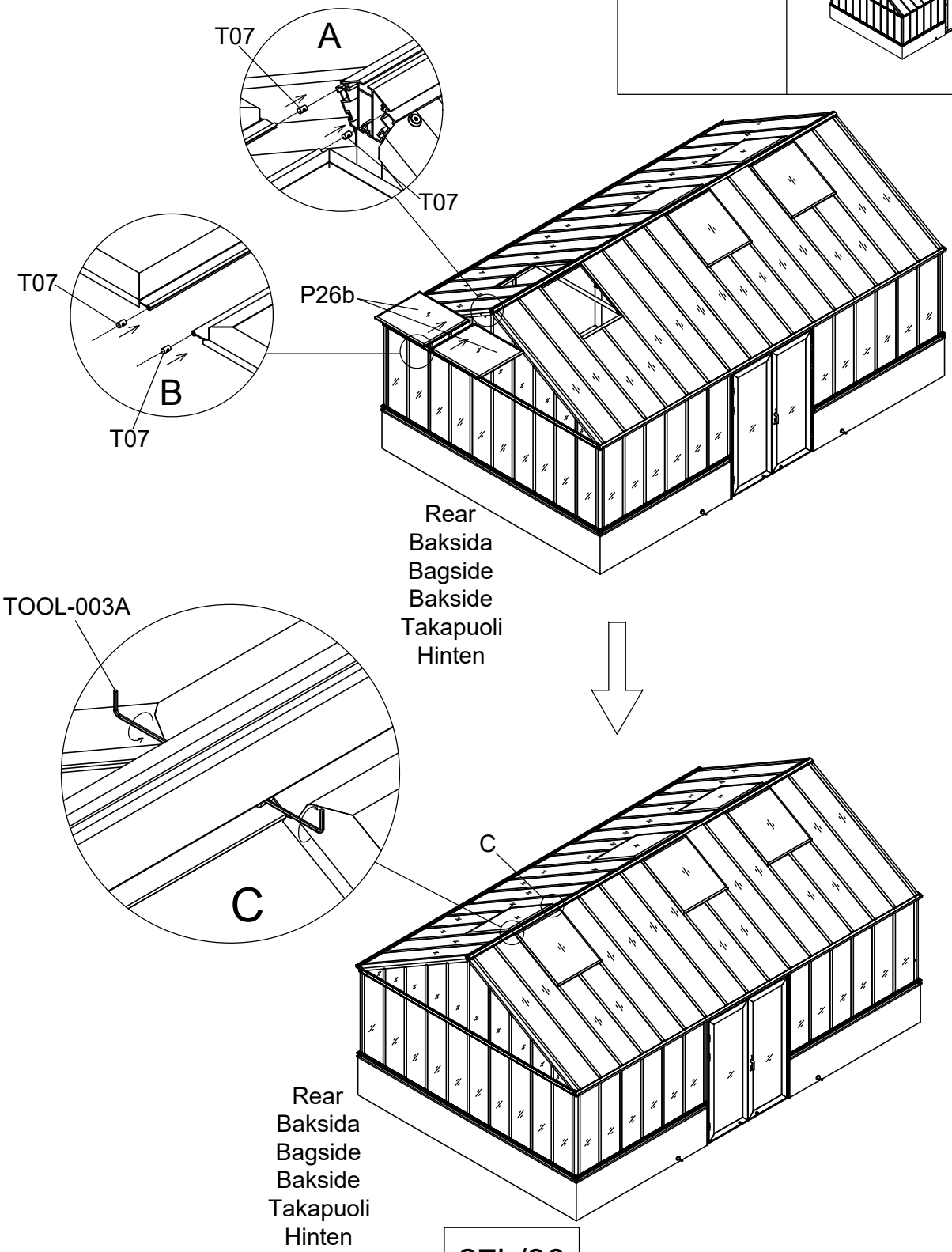

Part	NO.	QTY.	Length(MM)
	7C33-S02	2	PCS

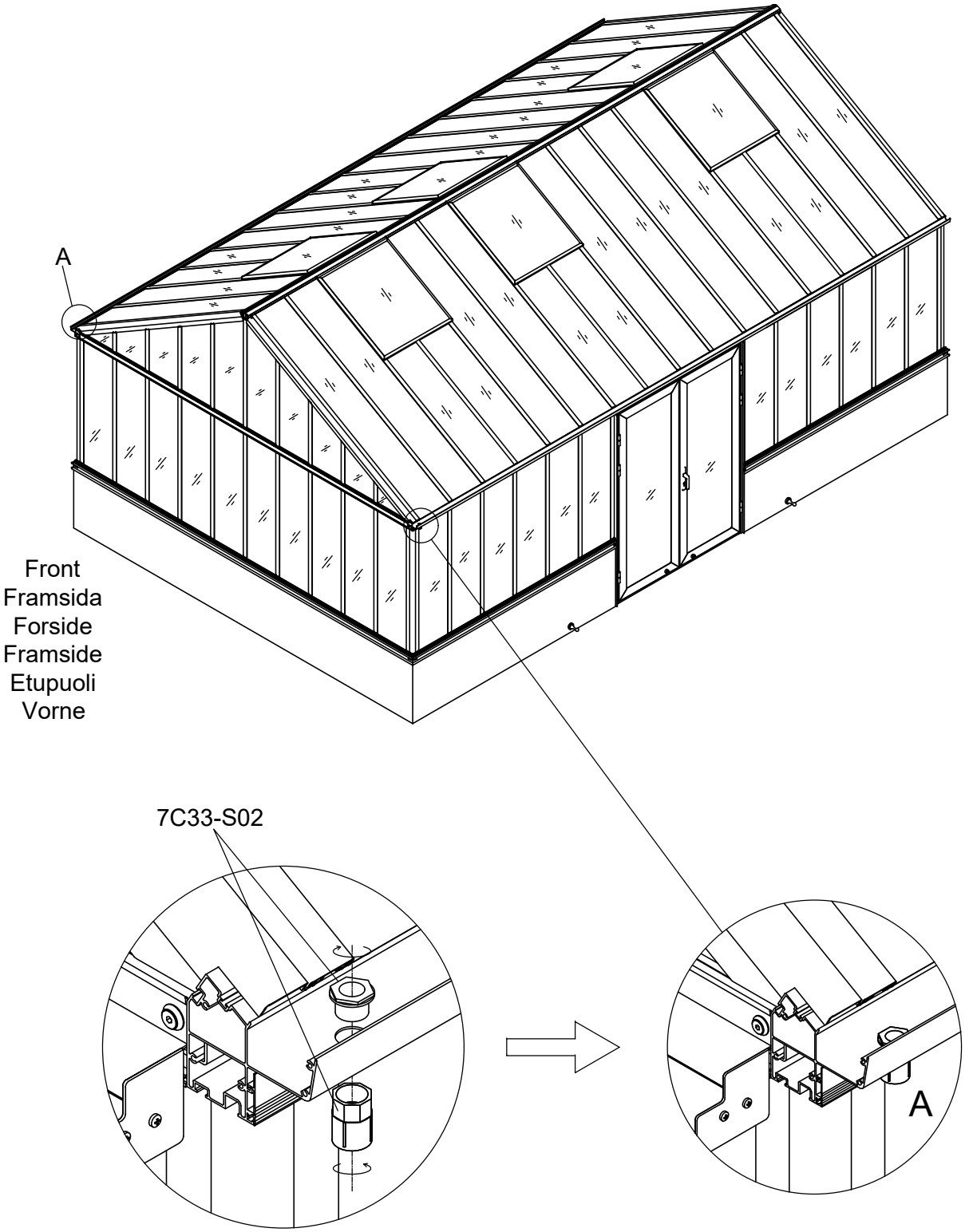

Part	NO.	QTY.	Length(MM)
	7C26-S01A	2	1900
	7C33-S03	4	PCS
	Z4.8-25	4	PCS
	7C33-S04	2	PCS
	J07-A	2	PCS
	J07-B	2	PCS

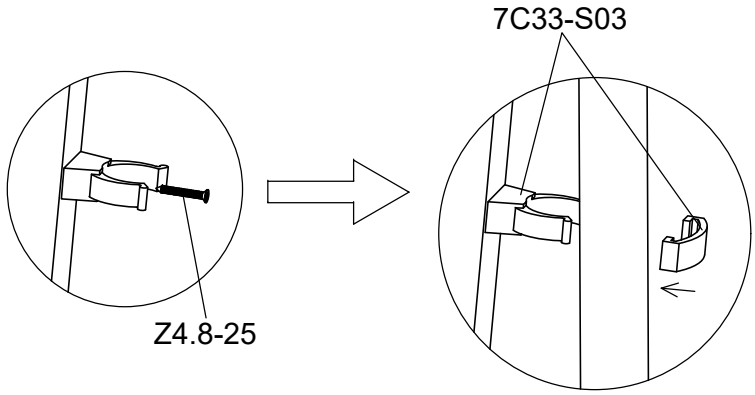

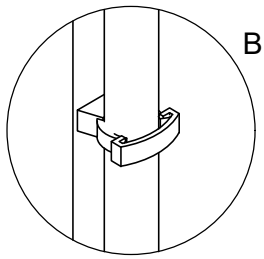

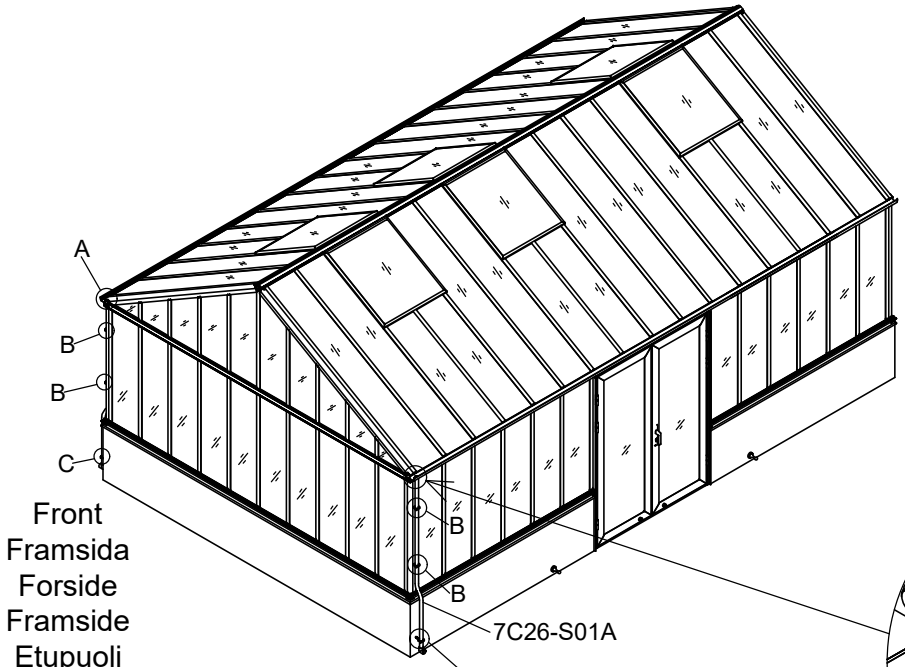

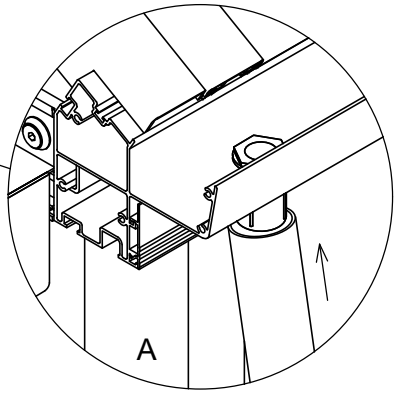

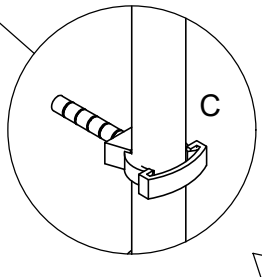

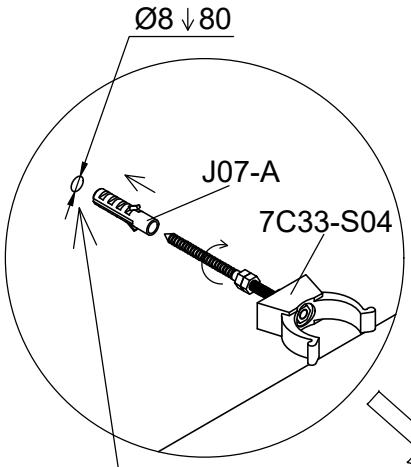

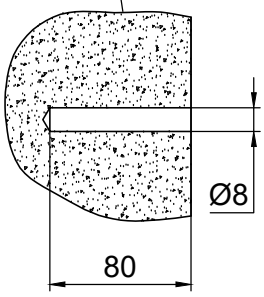

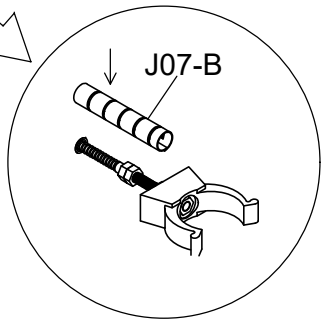

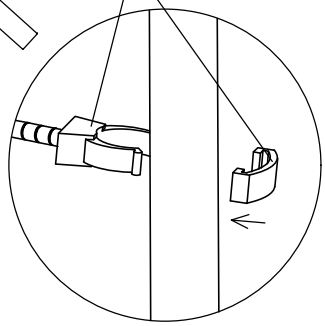

Part	NO.	QTY.	Length(MM)
	7B26-009C	2	PCS
	T10	4	PCS
	T10A	4	PCS
	Za4.2-13	6	PCS
	Z4.2-13	20	PCS

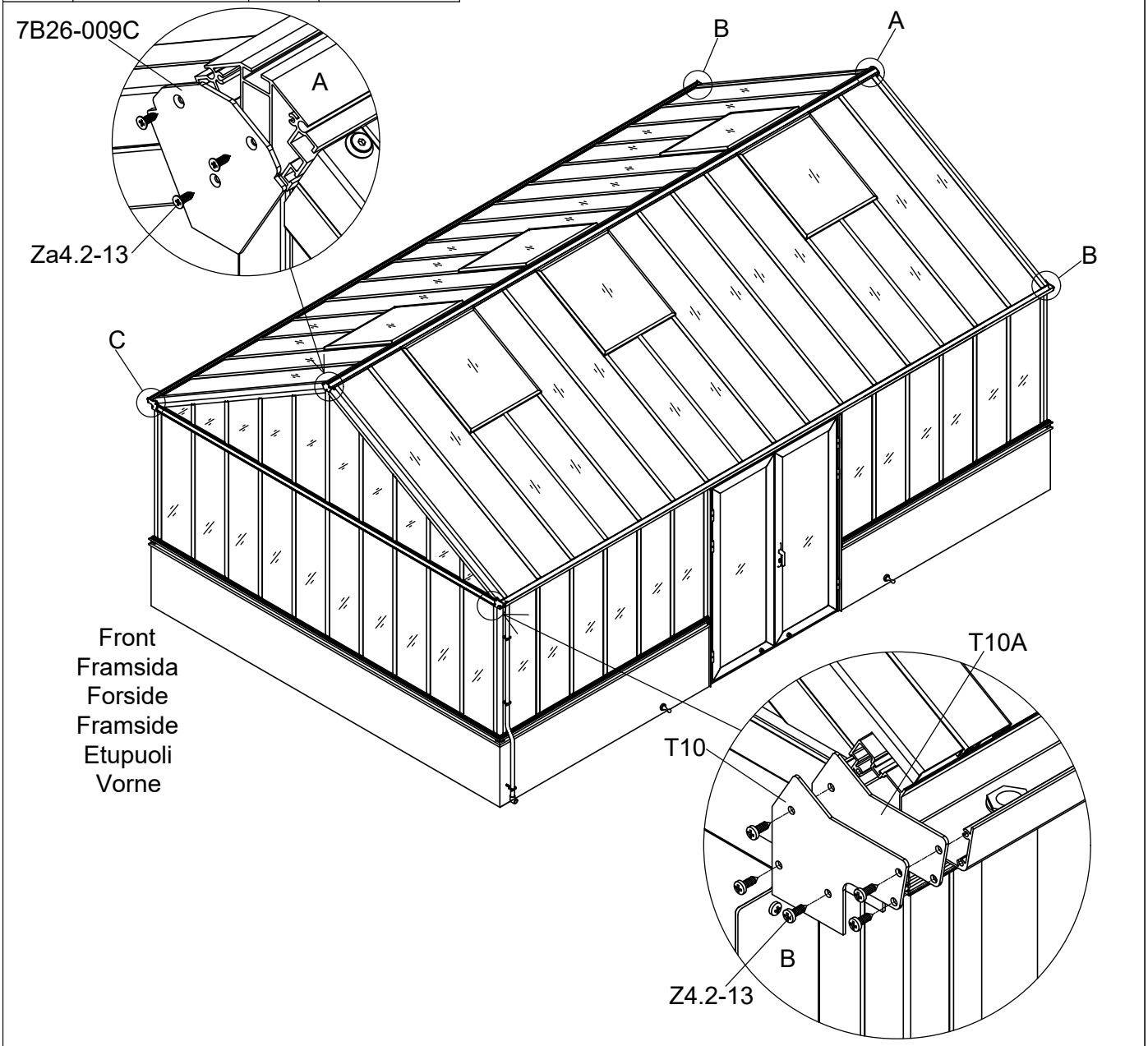

3054	3055	3056	3057
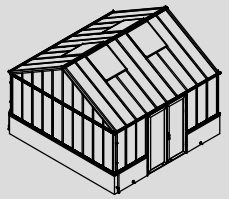	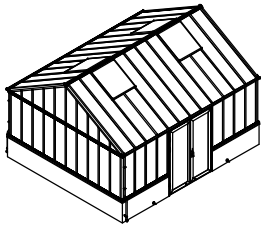	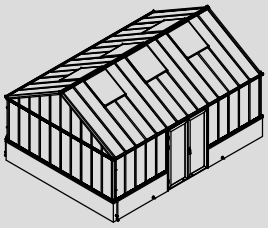	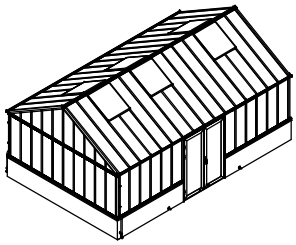

Part	Product	NO.	Length(MM)	CTN NO.	Code
	3054	50A-Y13R	1230	3043PA-S-5	A008
	3055	40A-S11-6R	1605	3043PA-S-6	
	3056	40A-S11-7R	1981	3043PA-S-7	
	3057	40A-S11-8R	2356	3043PA-S-8	
	3054	50A-Y13L	1230	3043PA-S-5	A009
	3055	40A-S11-6L	1605	3043PA-S-6	
	3056	40A-S11-7L	1981	3043PA-S-7	
	3057	40A-S11-8L	2356	3043PA-S-8	

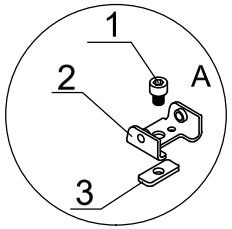

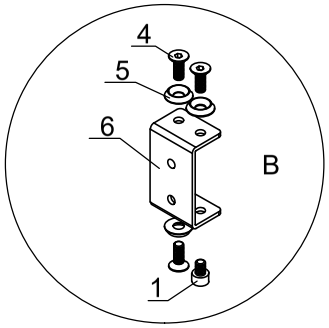

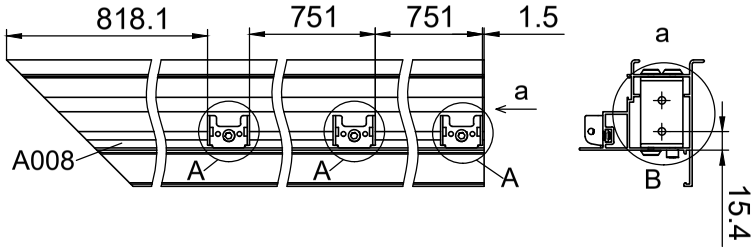

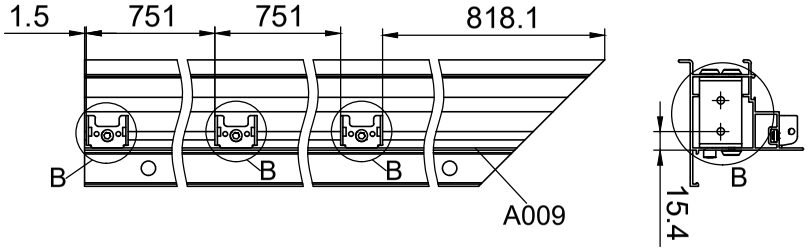

NO.	
1	M6-8
2	7B26-011
3	7B26-025
4	Si6-16
5	J05
6	7B26-037A

F1

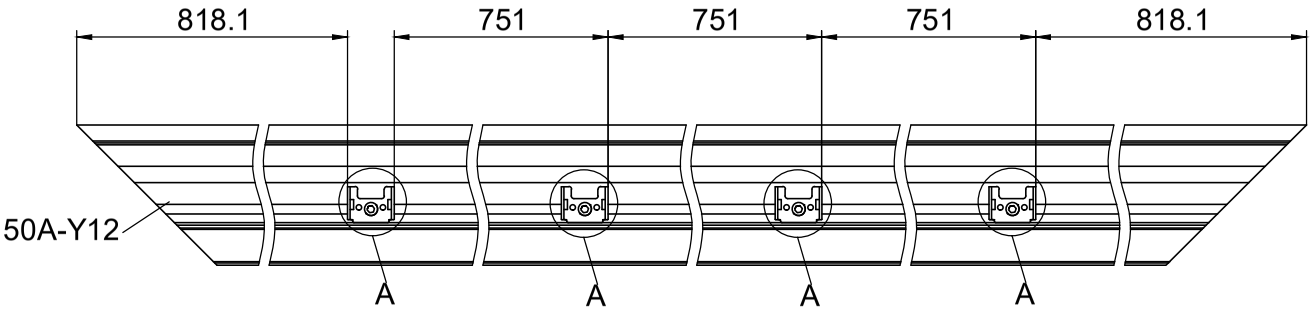

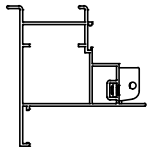

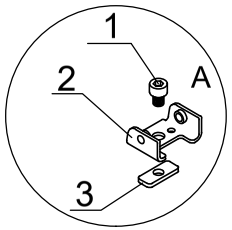

NO.	
1	M6-8
2	7B26-011
3	7B26-025

F2

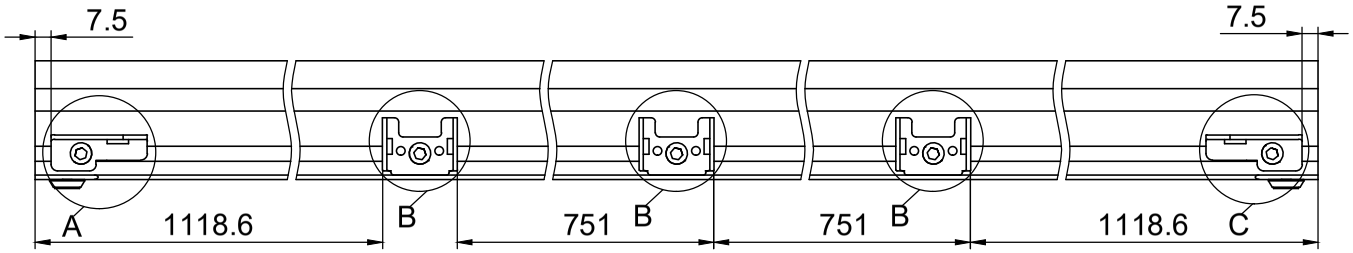

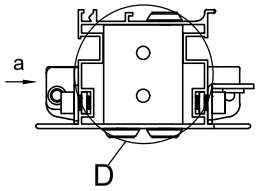

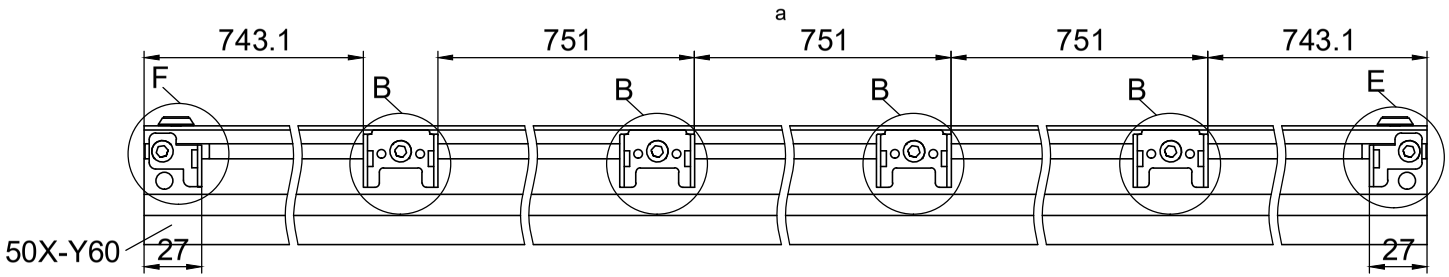

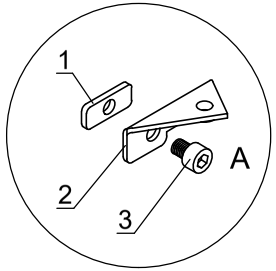

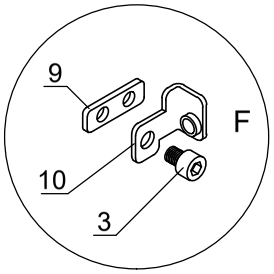

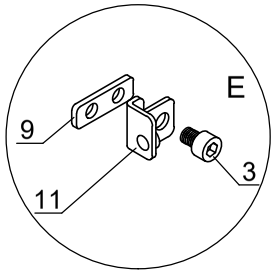

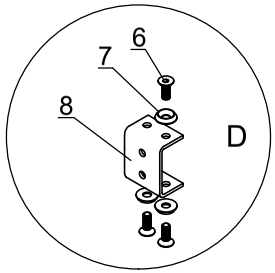

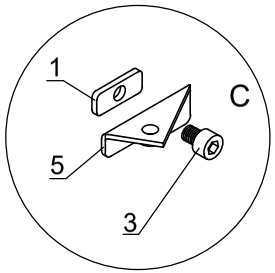

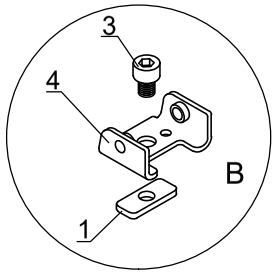

NO.	
1	7B26-025
2	7B26-030
3	M6-8
4	7B26-011
5	7B26-031
6	Si6-16
7	J05
8	7B26-028
9	7B26-033
10	7B26-027
11	7B26-026

F3

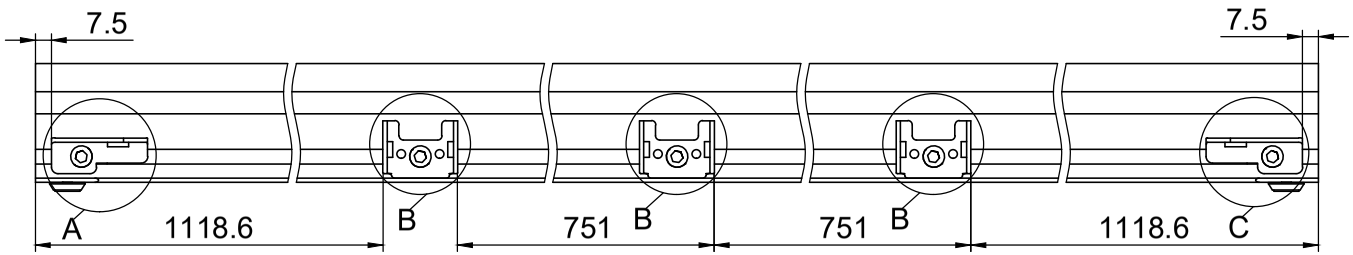

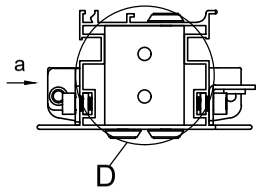

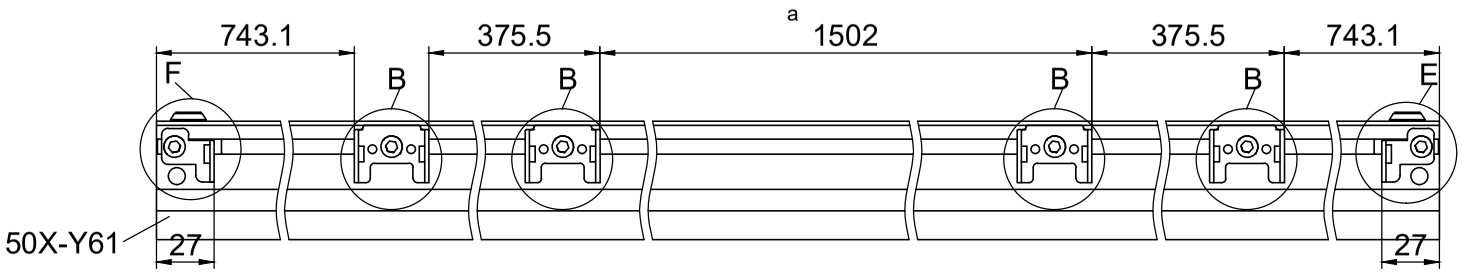

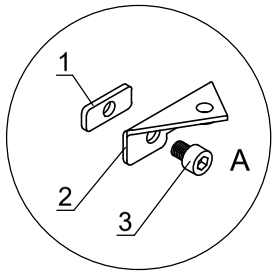

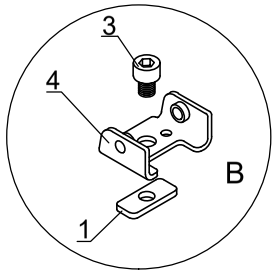

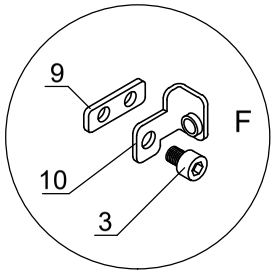

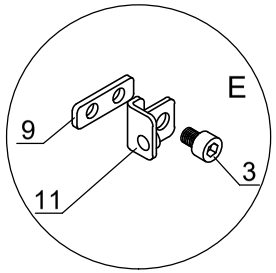

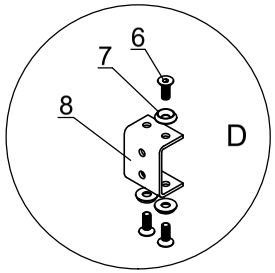

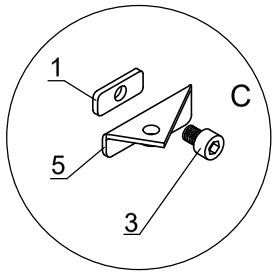

NO.	
1	7B26-025
2	7B26-030
3	M6-8
4	7B26-011
5	7B26-031
6	Si6-16
7	J05
8	7B26-028
9	7B26-033
10	7B26-027
11	7B26-026

F4

Part	Product	NO.	Length(MM)	Code
	3054	40X-Y62-5NR	3883	A003
	3055	40X-Y62-6NR	4634	
	3056	40X-Y62-7NR	5385	
	3057	40X-Y62-8NR	6136	

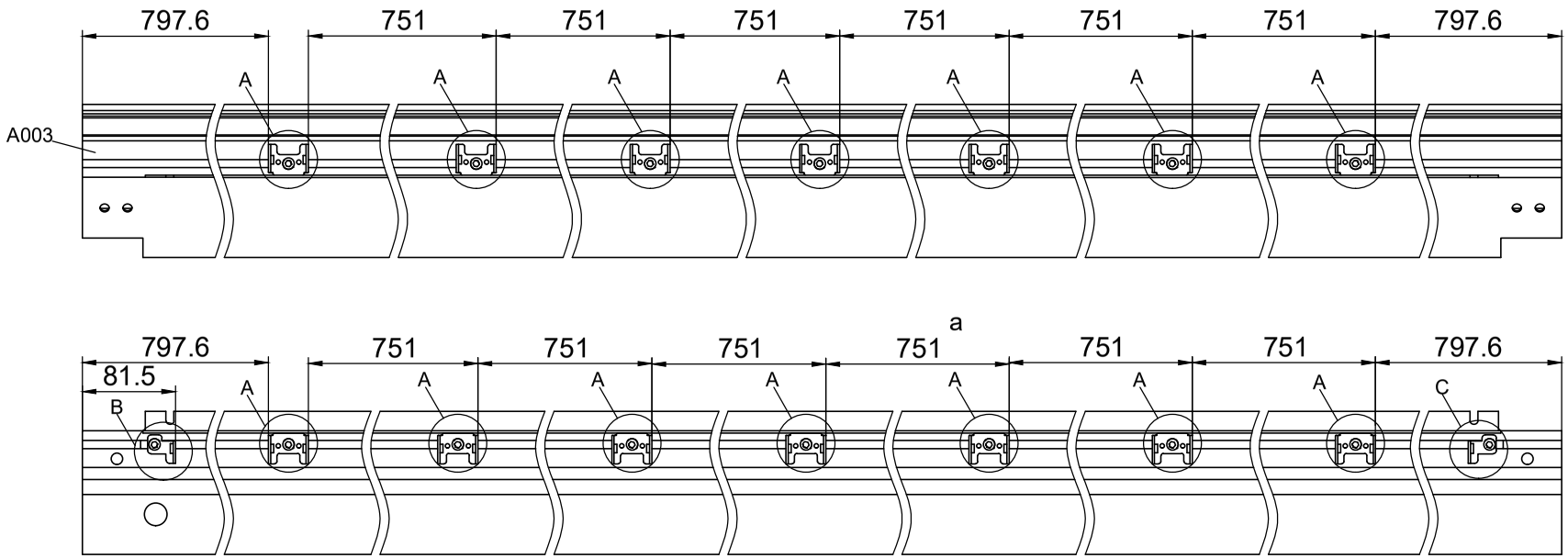

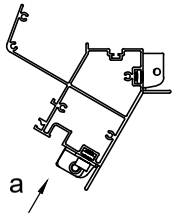

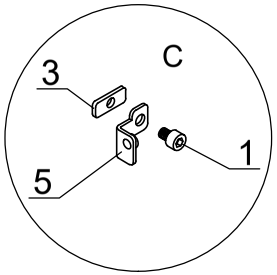

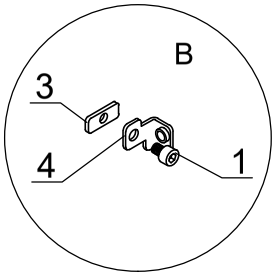

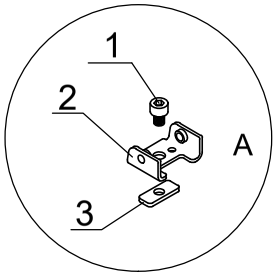

F5

NO.	
1	M6-8
2	7B26-011
3	7B26-025
4	7B26-027
5	7B26-026

Part	Product	NO.	Length(MM)	Code
	3054	40A-Y62-5NL	3883	A004
	3055	40A-Y62-6NL	4634	
	3056	40A-Y62-7NL	5385	
	3057	40A-Y62-8NL	6136	

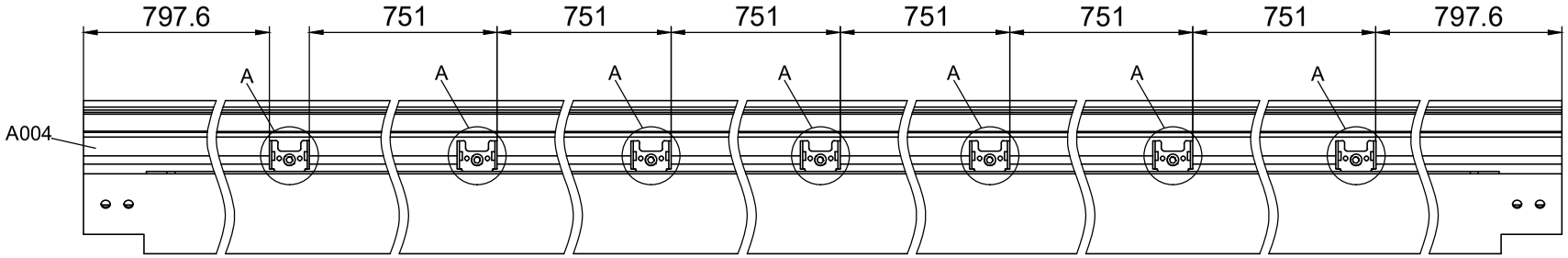

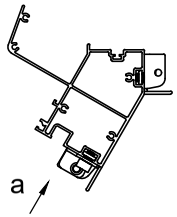

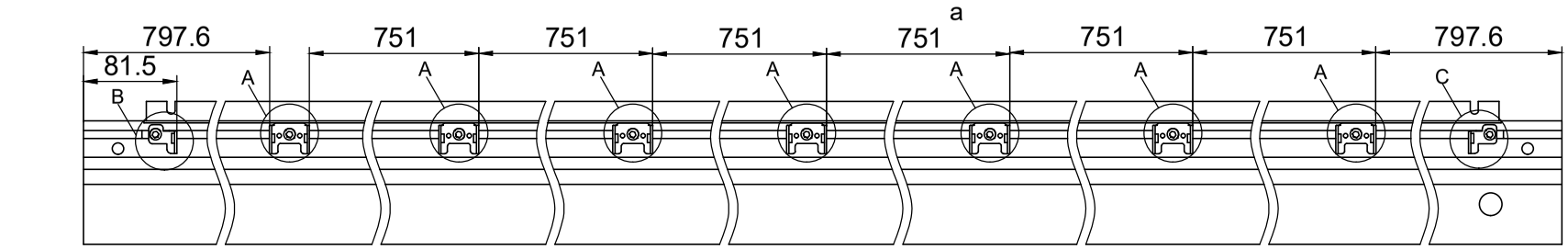

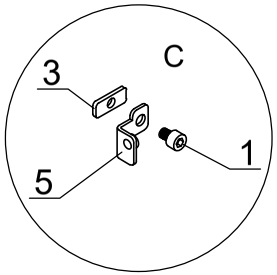

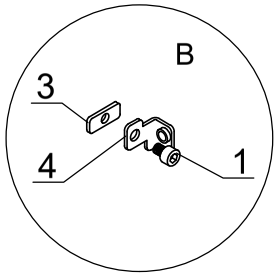

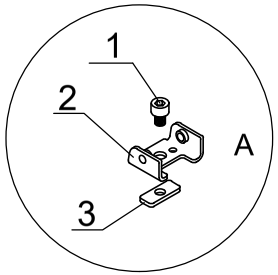

F6

NO.	
1	M6-8
2	7B26-011
3	7B26-025
4	7B26-027
5	7B26-026

Part	Product	NO.	Length(MM)	Code
	3054	40X-Y63-5	3869	A005
	3055	40X-Y63-6	4620	
	3056	40X-Y63-7	5371	
	3057	40X-Y63-8	6122	

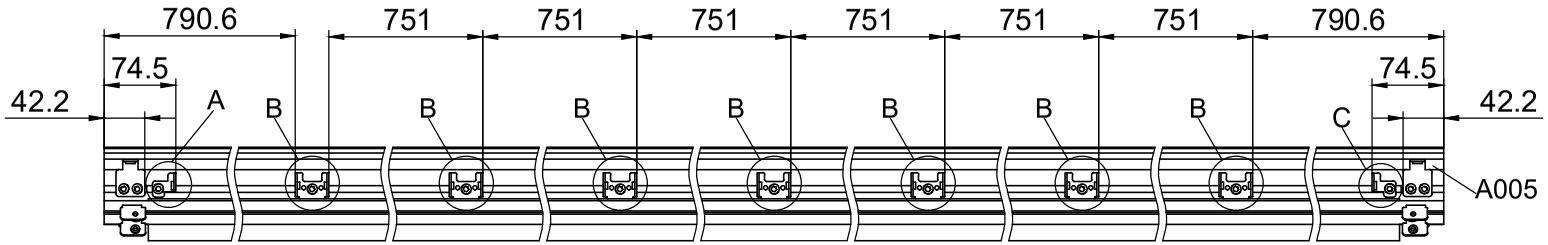

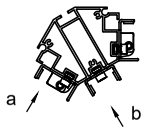

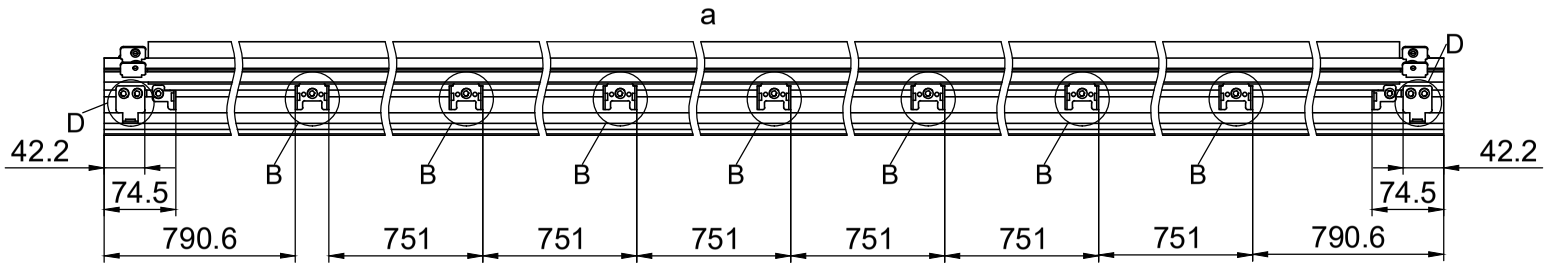

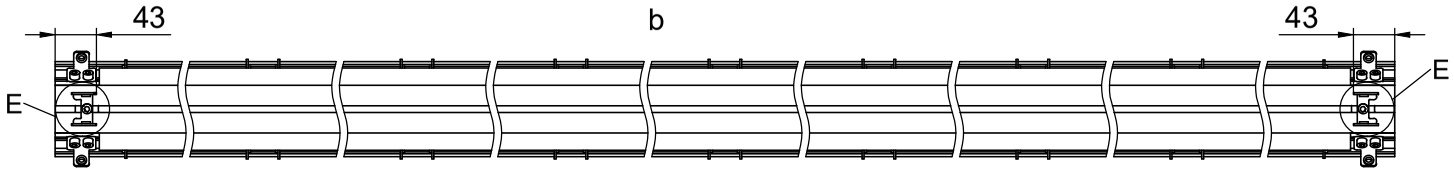

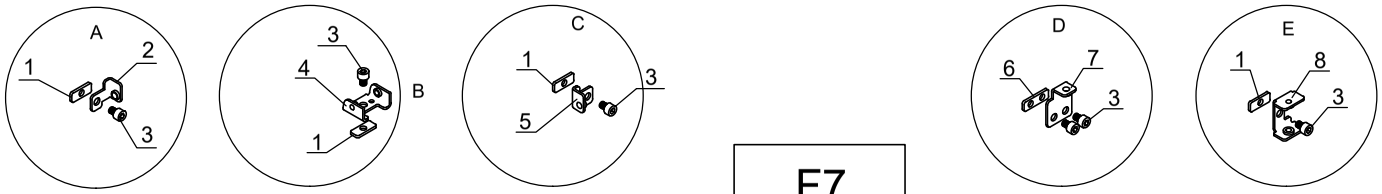

F7

NO.	
1	7B26-025
2	7B26-026
3	M6-8
4	7B26-011
5	7B26-027
6	7B26-033
7	7B26-032
8	7B26-034

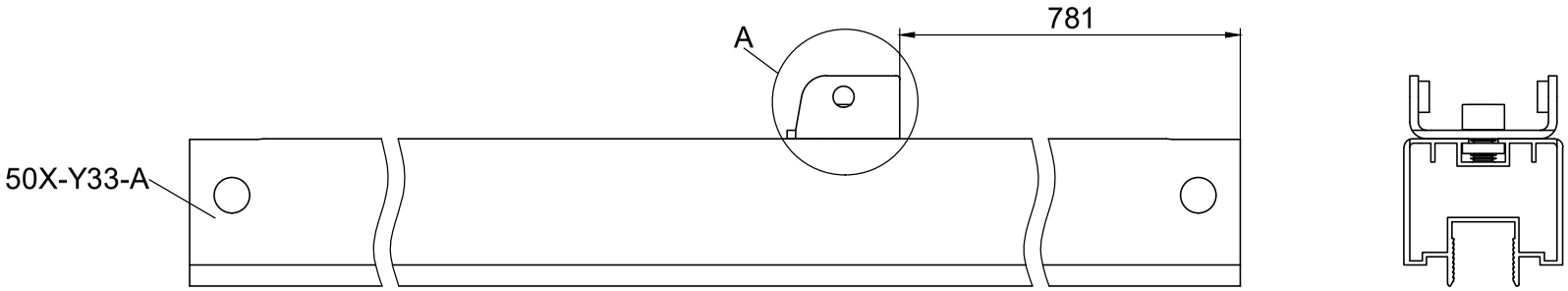

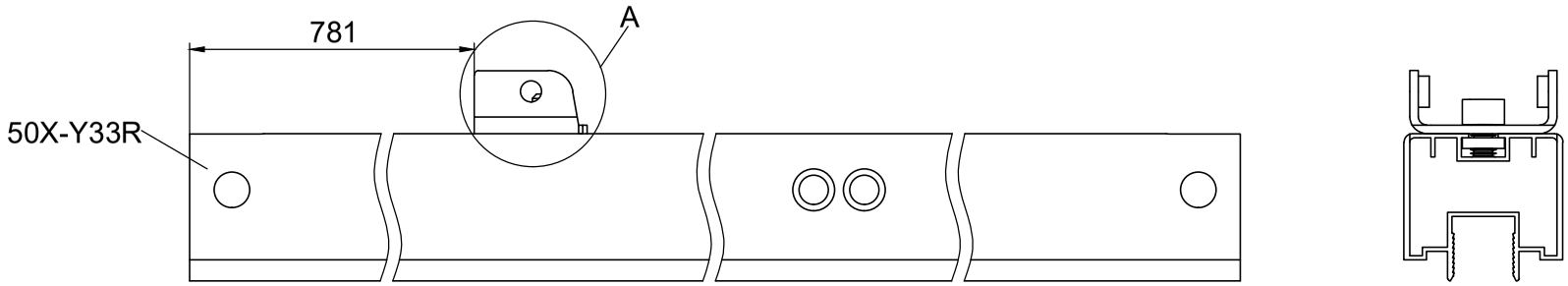

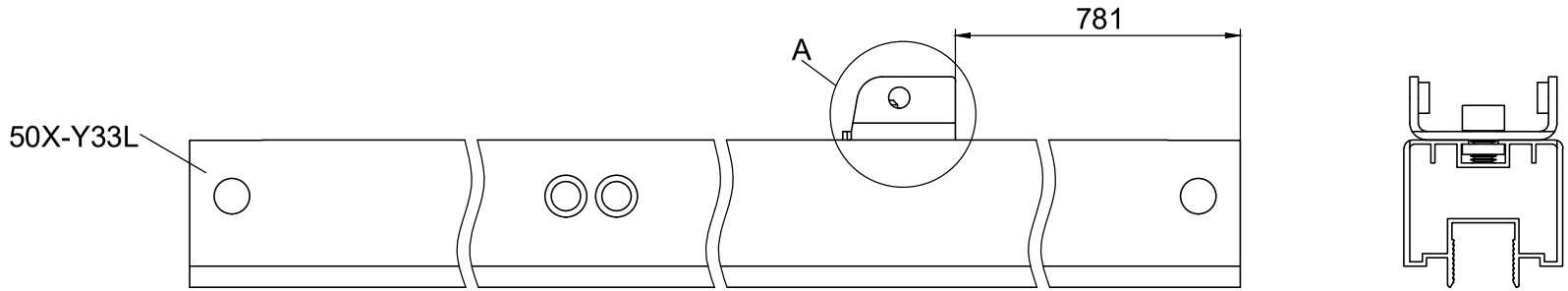

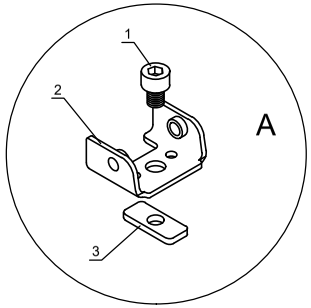

NO.	
1	M6-20
2	7B26-011
3	7B26-025

F8

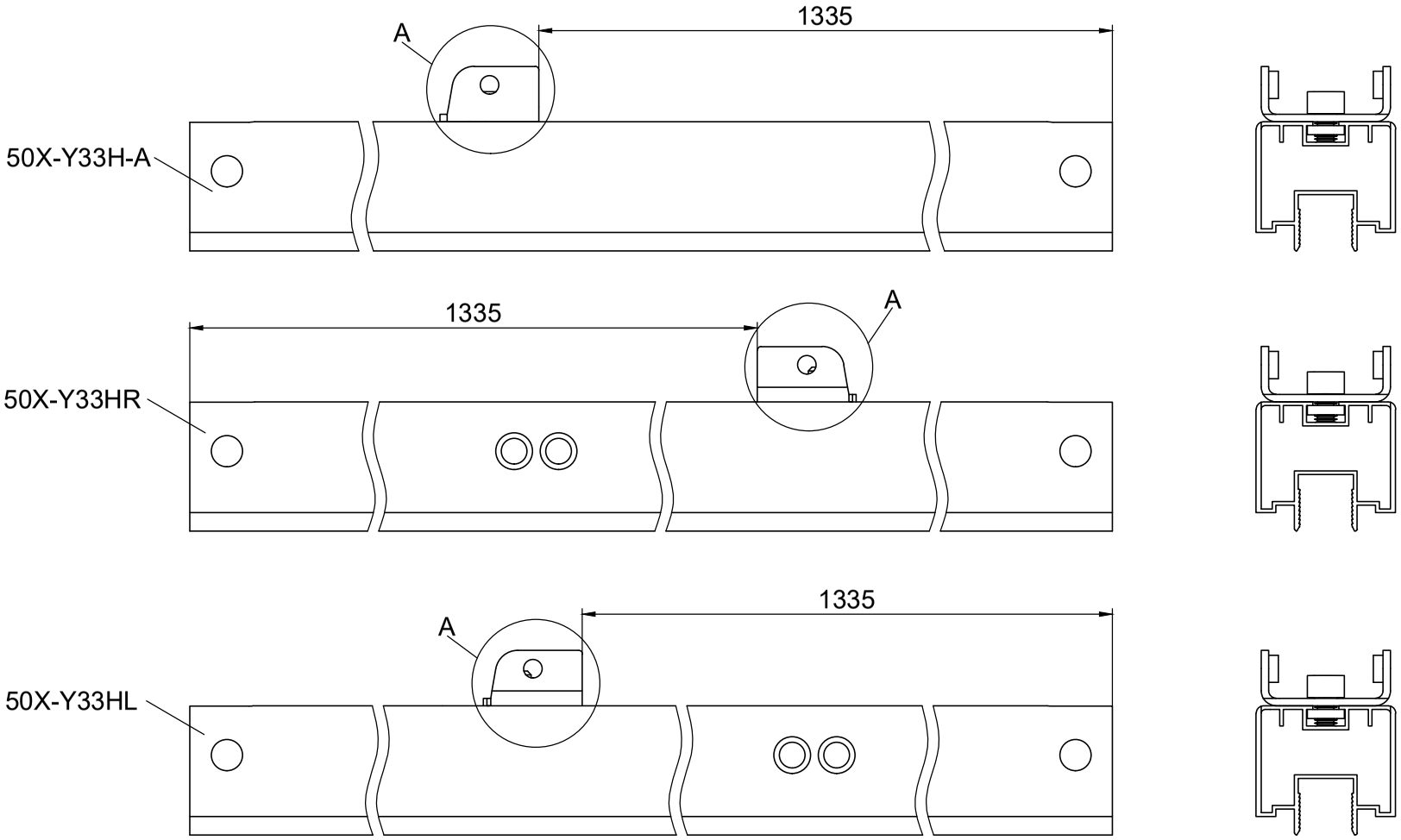

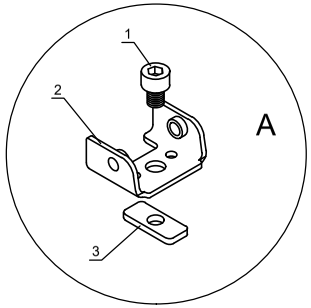

NO.	
1	M6-20
2	7B26-011
3	7B26-025

F9