Green Room®

BY WILLAB GARDEN

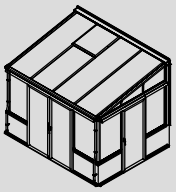	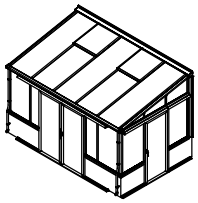	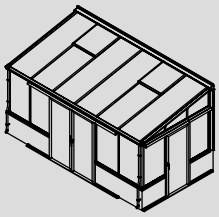	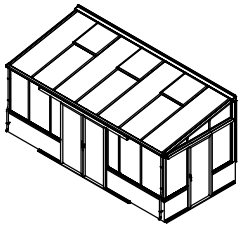	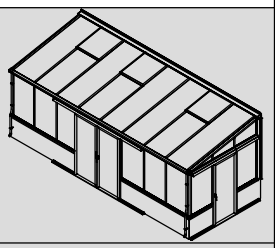
3172- FEG&XDF	3173- FEG&XDF	3174- FEG&XDF	3175- FEG&XDF	3176- FEG&XDF
314×245×255 cm	389×245×255 cm	464×245×255 cm	539×245×255 cm	614×245×255 cm

Product size (L×W×H):
Storlek (L×B×H):
Størrelse (L×B×H):
Størrelse (L×B×H):
Koko (P×L×K):
Produktgröße (L×B×H):

Please read carefully before assembling.
Two people are needed.

Läs noggrant innan montering.
Det krävs två personer för montering.

Læs venligst omhyggeligt, før montering.
Der kræves to personer til montering.

Les monteringsanvisningen nøye innen montering.
Det kreves to personer for montering.

Lue ohjeet huolellisesti läpi ennen asentamista.
Asentamiseen tarvitaan kaksi henkilöä.

Bitte vor dem Aufbau sorgfältig lesen.
Zwei Personen werden benötigt.

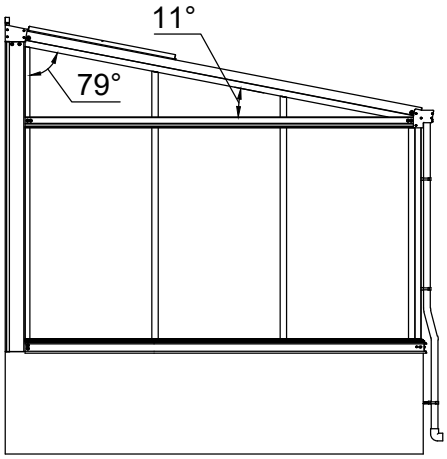

230208

Part	3171		3172		3173		3174		3175		3176		QTY.	Code	Page
	NO.	Length (MM)	NO.	Length (MM)	NO.	Length (MM)	NO.	Length (MM)	NO.	Length (MM)	NO.	Length (MM)			
	40L-Y62-3-11	2383	40L-Y62-4-11	3134	40L-Y62-5-11	3885	40L-Y62-6-11	4636	40L-Y62-7-11	5387	40L-Y62-8-11	6138	1	A003	P4
	40LA-Y63-3-11	2406	40LA-Y63-4-11	3157	40LA-Y63-5-11	3908	40LA-Y63-6-11	4659	40LA-Y63-7-11	5410	40LA-Y63-8-11	6161	1	A004	P5
	40LA-Y26A-3	2406	40LA-Y26A-4	3157	40LA-Y26A-5	3908	40LA-Y26A-6	4659	40LA-Y26A-7	5410	40LA-Y26A-8	6161	1	A005	P6
	40LA-Y26B-3	2148	40LA-Y26B-4	2899	40LA-Y26B-5	3650	40LA-Y26B-6	4401	40LA-Y26B-7	5152	40LA-Y26B-8	5903	1	A006	P6
	40LA-Y28A-3	2406	40LA-Y28A-4	3157	40LA-Y28A-5	3908	40LA-Y28A-6	4659	40LA-Y28A-7	5410	40LA-Y28A-8	6161	1	A007	P6
	40LA-Y28B-3	2166	40LA-Y28B-4	2917	40LA-Y28B-5	3668	40LA-Y28B-6	4419	40LA-Y28B-7	5170	40LA-Y28B-8	5921	1	A008	P6

Part	NO.	QTY.						Length (MM)	Page
		3171	3172	3173	3174	3175	3176		
	40X-P80E-B	1	1	2	2	3	3	801	P5
	40A-Y30	6	7	8	9	10	11	1235	P7
	30L-Y33R-11	1	1	2	2	3	3	2314	P9
	30L-Y33L-11	1	1	2	2	3	3	2314	P9
	40L-Y34A	1	1	2	2	3	3	713	P9
	30L-Y33A-11	0	1	0	1	0	1	2314	P9
	40A-Y01	8	9	10	11	12	13	1235	P11
	30L-Y06-11	4	5	6	7	8	9	2353	P15
	40L-Y07	1	1	2	2	3	3	713	P15

Part	NO.	QTY.						Length (MM)	Page
		3171	3172	3173	3174	3175	3176		
	40X-P80E-A	1	1	2	2	3	3	791	P25
	40X-Y81E	2	2	4	4	6	6	882	P25
	40X-Y82E	1	1	2	2	3	3	801	P25

Part	NO.	QTY.	Length(MM)	Page
	30LA-Y20R-11	1	1814	P2
	30LA-Y20L-11	1	1814	P2
	40A-Y20	2	1236	P3
	30L-S60R	1	2272	P4
	30L-S60L	1	2272	P4
	30LA-Y25A-11	2	1814	P6
	30LA-Y25B-11	2	1765	P6
	30LA-Y27A-11	2	1814	P6
	30LA-Y27B-11	2	1765	P6
	40LA-Y30	2	1235	P7
	30L-Y31R-11	1	415	P8
	30L-Y31L-11	1	415	P8
	40X-Y31R-11A	1	124	P8
	40X-Y31L-11A	1	124	P8
	40X-Y31R-11B	1	270	P8
	40X-Y31L-11B	1	270	P8
	30L-Y21-11	1	2353	P8
	30L-Y22-11	1	2353	P8
	40A-Y02	2	1235	P11
	40LA-Y01	2	1235	P11
	30L-Y05L-11	1	2315	P13
	40X-Y04L-11B	1	270	P13
	40X-Y04L-11A	1	124	P13
	30L-Y04L-11	1	414	P13
	30L-Y05R-11	1	2315	P14
	40X-Y04R-11B	1	270	P14
	40X-Y04R-11A	1	124	P14
	30L-Y04R-11	1	414	P14

Part	NO.	QTY.	Length(MM)	Page

Part	NO.	QTY.					Length(MM)	Page
		3172	3173	3174	3175	3176		
	W06	6	10	10	14	14	46	P2~25
	Si6-16	70	82	90	102	110	PCS	P2~9
	J05	82	94	102	114	122	PCS	P2~27
	J09	12	20	20	28	28	PCS	P2~26
	7C28-004	8	12	12	16	16	PCS	P4~9
	T07	2	4	4	6	6	PCS	P5
	PSJ10-80	18	20	20	22	22	PCS	P6
	DQ8-16	18	20	20	22	22	PCS	P6
	SW8-80	18	20	20	22	22	PCS	P6
	Si5-16	4	8	8	12	12	PCS	P9
	7B26-069	5	6	7	8	9	PCS	P15
	W04	4	8	8	12	12	PCS	P25
	7C26-007N	14.8M	15.6M	16.3M	17M	17.8M		P12~16
	7C26-038	3M	3M	3.8M	3.8M	4.5M		P16
	MCJT002	4M	8M	8M	12M	12M		P25~26

Part	NO.	QTY.	Length(MM)	Page
	M6-8	18	PCS	P2~8
	7B26-025	4	PCS	P2
	PS8-80	12	PCS	P2
	7B26-017	2	PCS	P3
	J08	1	PCS	P3~27
	7B26-077	2	PCS	P4
	M8-20	4	PCS	P4
	Si6-25	6	PCS	P5
	7C26-031	8	PCS	P6
	MF6	6	PCS	P7~8
	Si6-12	6	PCS	P7~8
	7B26-068	2	PCS	P8
	Si8-25	4	PCS	P8
	7B33-020	8	PCS	P8
	Si8-16	4	PCS	P8
	7C33-S02	2	PCS	P28
	7C33-S03	4	PCS	P29
	Z4.8-25	4	PCS	P29
	7C33-S04	2	PCS	P29
	J07-A	2	PCS	P29
	J07-B	2	PCS	P29
	7B26-074	1	PCS	P30
	7B26-073	1	PCS	P30
	7C26-039	2	PCS	P30
	Za4.2-13	18	PCS	P30
	7B26-076	1	PCS	P30
	7B26-075	1	PCS	P30
	7C26-040	2	PCS	P30
	L06	2	1400	P4

Part	NO.	QTY.	Length(MM)	Page
	7C26-S01A	2	1900	P29
	TOOL-001	1	274	P2~30
	TOOL-002	1	80	P2~30
	TOOL-003A	1	2MM	P5~7
	TOOL-004A	1	3MM	
	TOOL-005	1	4MM	P2~27
	TOOL-006	1	5MM	P2~22
	TOOL-007	1	6MM	P4

3040P-E

Part	NO.	QTY.	Length(MM)	Page
	40A-Y90	1	1866	P18
	40A-Y91R	1	1866	P18
	40A-Y92R	1	769	P18
	40A-Y93	1	769	P18
	40A-Y95	2	1765	P19
	40A-Y96	2	668	P19
	40A-Y97R	1	1860	P20
	40A-Y97-A	1	1851	P20
	40A-Y98-SR	1	1910	P21
	40A-Y98-SL	1	1910	P21
	40A-Y99-S	1	673	P21
	40A-Y100-S	1	673	P21
	40A-Y17-S01	1	2359	P22
	40A-Y64-S01L	1	2265	P22
	40X-Y94-S01L	1	1885	P22
	NSST120	1.9M		P24

Part	NO.	QTY.	Length(MM)	Page
	W03	4	30	P18
	W04	8	PCS	P18
	Z4.2-13	14	PCS	P20~22
	M6-35	2	PCS	P21
	Si6-35	6	PCS	P21
	J05	17	PCS	P21~22
	7C26-031	2	PCS	P21
	Si6-16	8	PCS	P21
	PS6-60	2	PCS	P21
	Si6-25	3	PCS	P22
	7B26-039	2	PCS	P22
	7C28-004	6	PCS	P22
	Z4.2-50	6	PCS	P22
	7B26-038	2	PCS	P22
	T01	1	PCS	P24
	T01A	1	PCS	P24
	J02	1	PCS	P24
	M4-40	2	PCS	P24
	Mi4-17	2	PCS	P24
	Z3.5-25	6	PCS	P24
	T04	2	PCS	P24
	MCJT002	6M		P19

3040P-D

Part	NO.	QTY.	Length(MM)	Page
	40A-Y90	2	1866	P13
	40A-Y91R	1	1866	P13
	40A-Y91L	1	1866	P13
	40A-Y92R	1	769	P13
	40A-Y92L	1	769	P13
	40A-Y93	2	769	P13
	40A-Y95	4	1765	P14
	40A-Y96	4	668	P14
	40A-Y97-A	2	1851	P16
	40A-Y97R	1	1860	P16
	40A-Y97L	1	1860	P16
	40A-Y94	1	1835	P16
	40A-Y98-R	1	1910	P17
	40A-Y98-L	1	1910	P17
	40A-Y99	1	1424	P17
	40A-Y100	1	1424	P17
	40A-Y64	1	3016	P18
	40A-Y17	1	3110	P18
	40A-Y98A-R	1	1855	P18
	40A-Y98A-L	1	1855	P18

Part	NO.	QTY.	Length(MM)	Page
	W03	8	30	P13
	W04	16	PCS	P13
	Z4.2-13	16	PCS	P16~19
	T04	2	PCS	P16
	Z4.2-38	3	PCS	P16
	Z3.5-25	8	PCS	P16~19
	7B26-036	1	PCS	P17
	Ma6-12	4	PCS	P17
	M6	4	PCS	P17
	M6-8	2	PCS	P17
	M6-35	2	PCS	P17
	Si6-35	6	PCS	P17
	J05	19	PCS	P17~18
	Si6-16	10	PCS	P17
	PS6-60	2	PCS	P17
	7C28-004	5	PCS	P18
	Z4.2-50	5	PCS	P18
	Si6-25	3	PCS	P18
	7C26-031	2	PCS	P18
	T01	1	PCS	P19
	T01A	1	PCS	P19
	J02	2	PCS	P19
	7B26-039	2	PCS	P19
	7B26-038	2	PCS	P19
	M4-40	2	PCS	P19
	Mi4-17	2	PCS	P19
	NSST120	1.9M		P16
	MCJT002	11M		P15

	Part	NO.	QTY.	Length(MM)	Page	Code
3043PA-S-4		40A-Y13L	1	854	P2	A009
		40A-Y13R	1	854	P2	A010
		40A-S11-4AR	1	749	P2	A011
		40A-S11-4AL	1	749	P2	A012
		40A-Y13L-A	1	779	P2	
		40A-Y13R-A	1	779	P2	
		40A-Y15-L	1	842	P11	A013
		40A-Y15-R	1	842	P11	A014

	Part	NO.	QTY.	Length(MM)	Page	Code
3171P-S-5D		50A-Y13R	1	1230	P2	A009
		50A-Y13L	1	1230	P2	A010
		40A-S11-5AR	1	1125	P2	A011
		40A-S11-5AL	1	1125	P2	A012
		50A-Y15-R	1	1218	P11	A013
		50A-Y15-L	1	1218	P11	A014
		40L-Y62A-5B	2	431	P17	A015

	Part	NO.	QTY.	Length(MM)	Page	Code
3171P-S-6D		40A-S11-6R	1	1605	P2	A009
		40A-S11-6L	1	1605	P2	A010
		40A-S11-6AR	1	1500	P2	A011
		40A-S11-6AL	1	1500	P2	A012
		40A-S15-6R	1	1593	P11	A013
		40A-S15-6L	1	1593	P11	A014
		40L-Y62A-6B	2	807	P17	A015

	Part	NO.	QTY.	Length(MM)	Page	Code
3171P-S-7D		40A-S11-7R	1	1981	P2	A009
		40A-S11-7L	1	1981	P2	A010
		40A-S11-7AR	1	1876	P2	A011
		40A-S11-7AL	1	1876	P2	A012
		40A-S15-7R	1	1969	P11	A013
		40A-S15-7L	1	1969	P11	A014
		40L-Y62A-7B	2	1182	P17	A015

	Part	NO.	QTY.	Length(MM)	Page	Code
3171P-S-8D		40A-S11-8R	1	2356	P2	A009
		40A-S11-8L	1	2356	P2	A010
		40A-S11-8AR	1	2251	P2	A011
		40A-S11-8AL	1	2251	P2	A012
		40A-S15-8R	1	2344	P11	A013
		40A-S15-8L	1	2344	P11	A014
		40L-Y62A-8B	2	1558	P17	A015

	Part	NO.	QTY.	Length(MM)	Page
3171P-S-3F		30LA-Y12L	1	2347	P2
		30LA-Y12L-A	1	2272	P2
		30L-S15L-4	1	2335	P11
		30X-Y60-AN	1	2272	P17

	Part	NO.	QTY.	Length(MM)	Page
3171P-S-4-REAR		40A-Y13L	1	854	P2
		40LA-Y13R	1	779	P2
		40A-Y13L-A	1	779	P2
		40LA-Y13-A	1	779	P2
		40A-Y15-L	1	842	P11
		40LA-Y15	1	779	P11

CTN NO.	QTY.				
	3172	3173	3174	3175	3176
3040P-E	1	1	1	1	1
3040P-D	1	1	1	1	1
3043PA-S-4	1	0	0	0	0
3171P-S-5D	0	1	0	0	0
3171P-S-6D	0	0	1	0	0
3171P-S-7D	0	0	0	1	0
3171P-S-8D	0	0	0	0	1
3171P-S-3F	1	1	1	1	1
3171P-S-4-REAR	1	1	1	1	1

Part	NO.	QTY.					Length(MM)	Page
		3172	3173	3174	3175	3176		
	730×1262	7	7	9	9	11	1262	P10
	354×1262	0	2	0	2	0	1262	P10
	620×134	2	2	2	2	2	620	P13~14
	730×280	2	2	2	2	2	730	P13~14
	730×426	2	2	2	2	2	730	P13~14
	729×2366	3	3	4	4	5	2366	P15
	729×1485	1	2	2	3	3	1485	P15
	659×1756	3	3	3	3	3	1756	P19
	782×863	1	2	2	3	3	863	P25

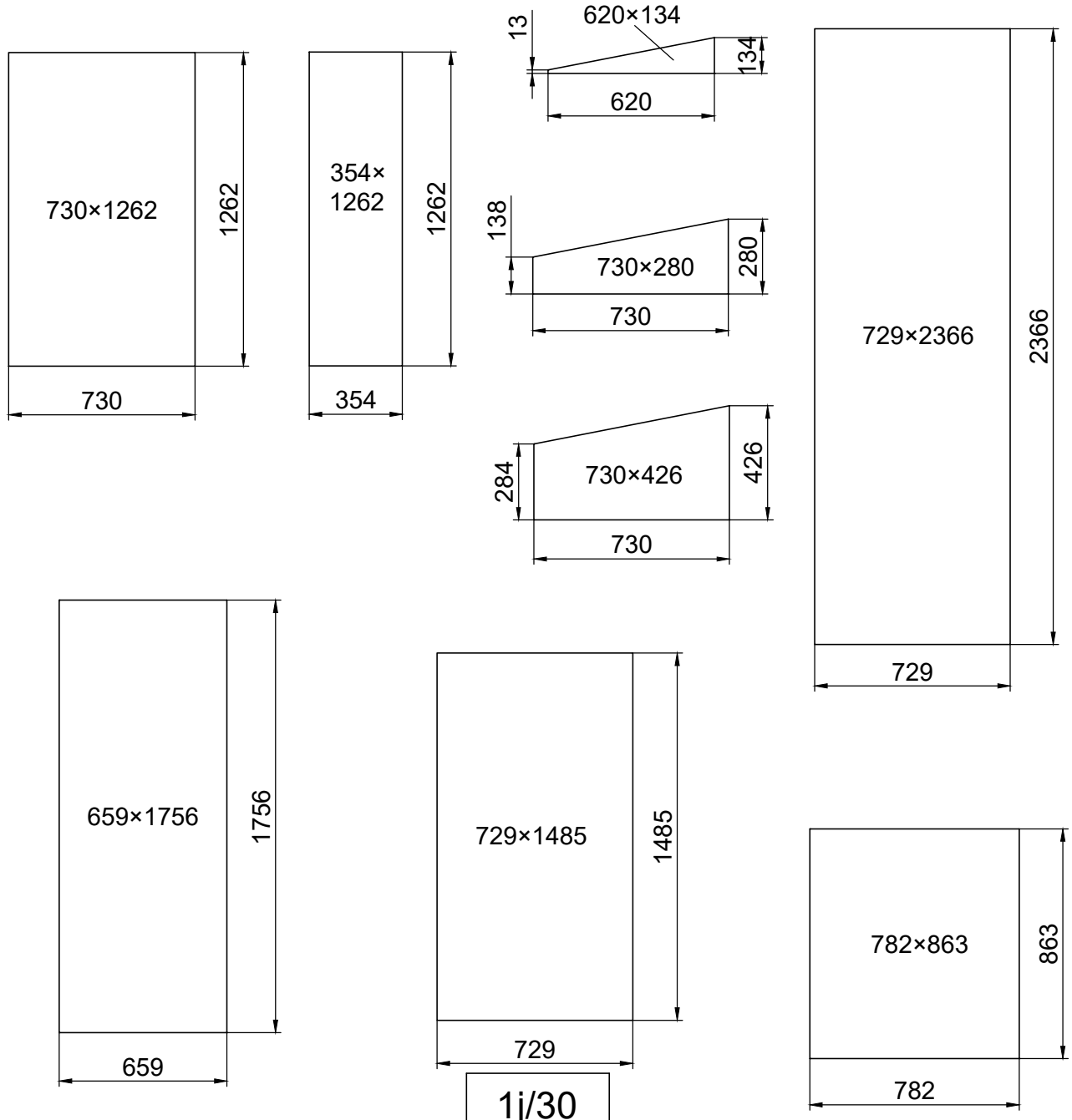

NO.	3172	3173	3174	3175	3176
L1	3139	3890	4641	5392	6143
L2	832	1208	1583	1959	2334
AREA	10.0 M^2	12.4 M^2	14.8 M^2	17.2 M^2	19.6 M^2

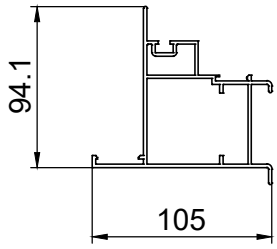

Sealing should be done to prevent frost from destroying the wall. The sealant between the wall and foundation of the greenroom is provided and handled by customers themselves.

Tätning bör göras för att muren ej skall frostsprängas. Tätning mellan mur och sockel står kunden själv för.

Tætningen bør gøres for at forhindre frostsprængninger i muren. Tætningen mellem mur og aluminiumprofil står kunden selv for

En tetning bør lages for å hindre frostsprengning av muren. Tetning mellom mur og sokkel ordnes av kunden selv

Tiivistys täytyy tehdä, jotta muuri ei hajoa pakkasella. Tiiviste muurin ja sokkelin välissä täytyy asiakkaan hoitaa itse

Die Abdichtung sollte erfolgen, um zu verhindern, dass der Frost die Wand zerstört. Die Abdichtung zwischen der Wand und dem Fundament des Greenrooms wird vom Kunden selbst besorgt und durchgeführt.

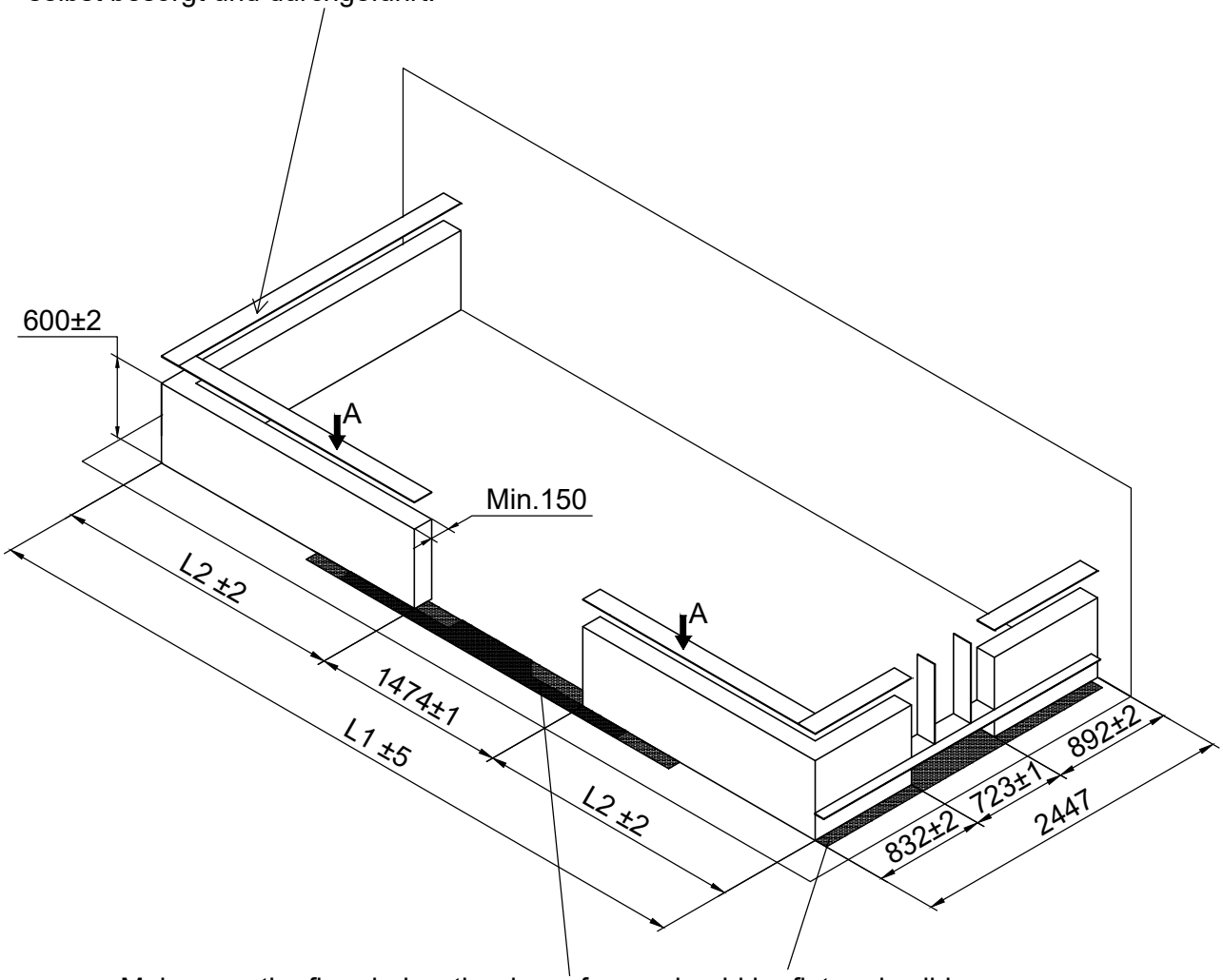

Make sure the floor below the doors frame should be flat and solid.
Se till att underlaget under dörrramen är plan och på solid grund.
Sørg for, at underlaget under dørkarmen er plan og på fast grund.
Sørg for at underlaget under dørterskelen er slett og på solid fundament.
Tarkista, että maa ovikarmin alla on sileä ja tasainen.
Achten Sie darauf, dass der Boden unter dem Türrahmen eben und fest ist.

Part	Product	NO.	Length(MM)	QTY.	CTN NO.	Code
	3172	40A-Y13R	854	1	3043PA-S-4	A009
	3173	50A-Y13R	1230	1	3171P-S-5D	
	3174	40A-S11-6R	1605	1	3171P-S-6D	
	3175	40A-S11-7R	1981	1	3171P-S-7D	
	3176	40A-S11-8R	2356	1	3171P-S-8D	
	3172	40A-Y13L	854	1	3043PA-S-4	A010
	3173	50A-Y13L	1230	1	3171P-S-5D	
	3174	40A-S11-6L	1605	1	3171P-S-6D	
	3175	40A-S11-7L	1981	1	3171P-S-7D	
	3176	40A-S11-8L	2356	1	3171P-S-8D	

Part	NO.	Length(MM)	QTY.	CTN NO.
	30LA-Y12L	2347	1	3171P-S-3F
	40A-Y13L	854	1	3171P-S-4-REAR
	40LA-Y13R	779	1	3171P-S-4-REAR

Part	NO.	QTY.	Length(MM)
	30LA-Y20R-11	1	1814
	30LA-Y20L-11	1	1814

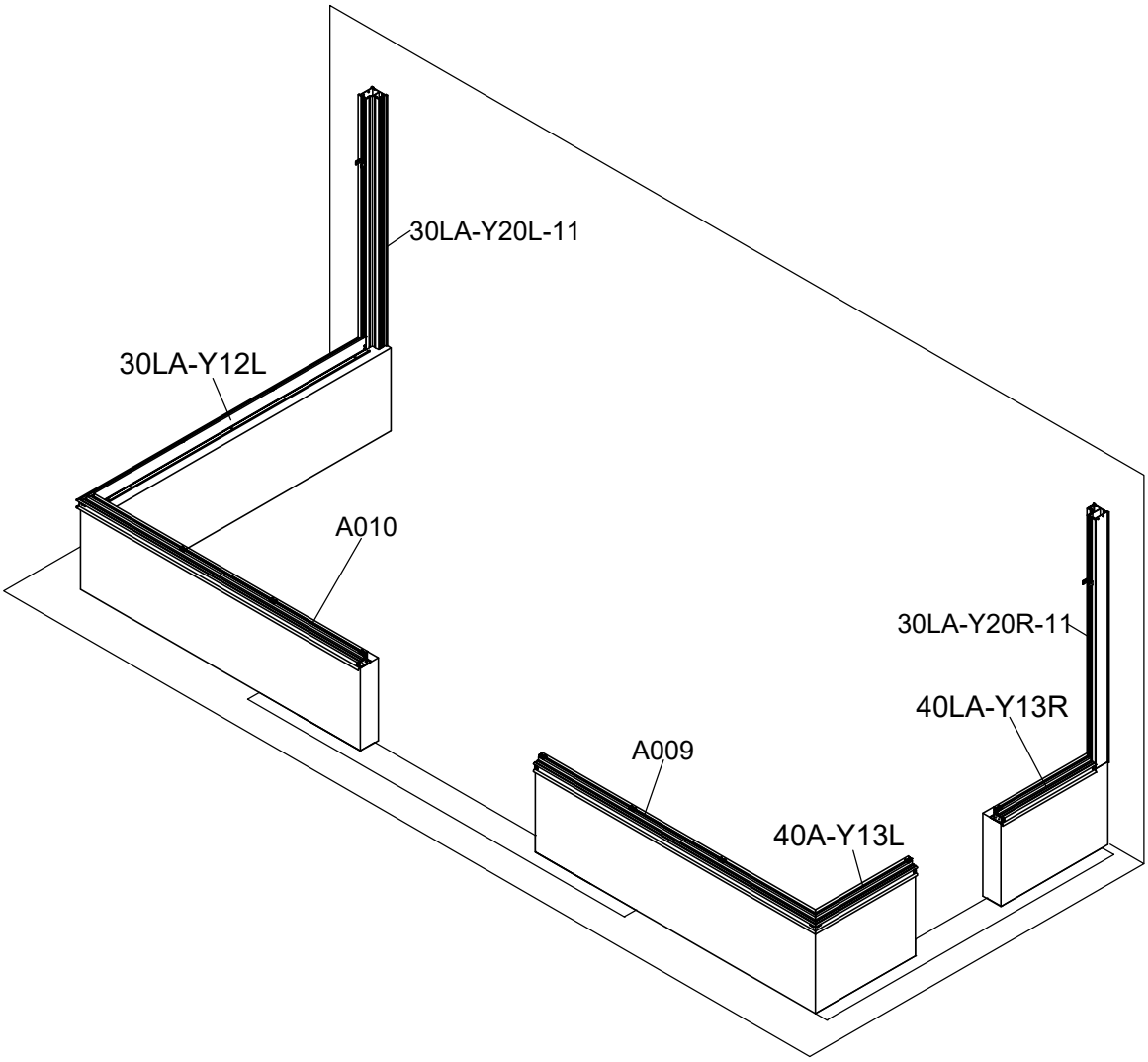

Part	NO.	QTY.	Length(MM)
	W06	2	46
	Si6-16	6	PCS
	J05	6	PCS
	M6-8	2	PCS
	7B26-025	4	PCS

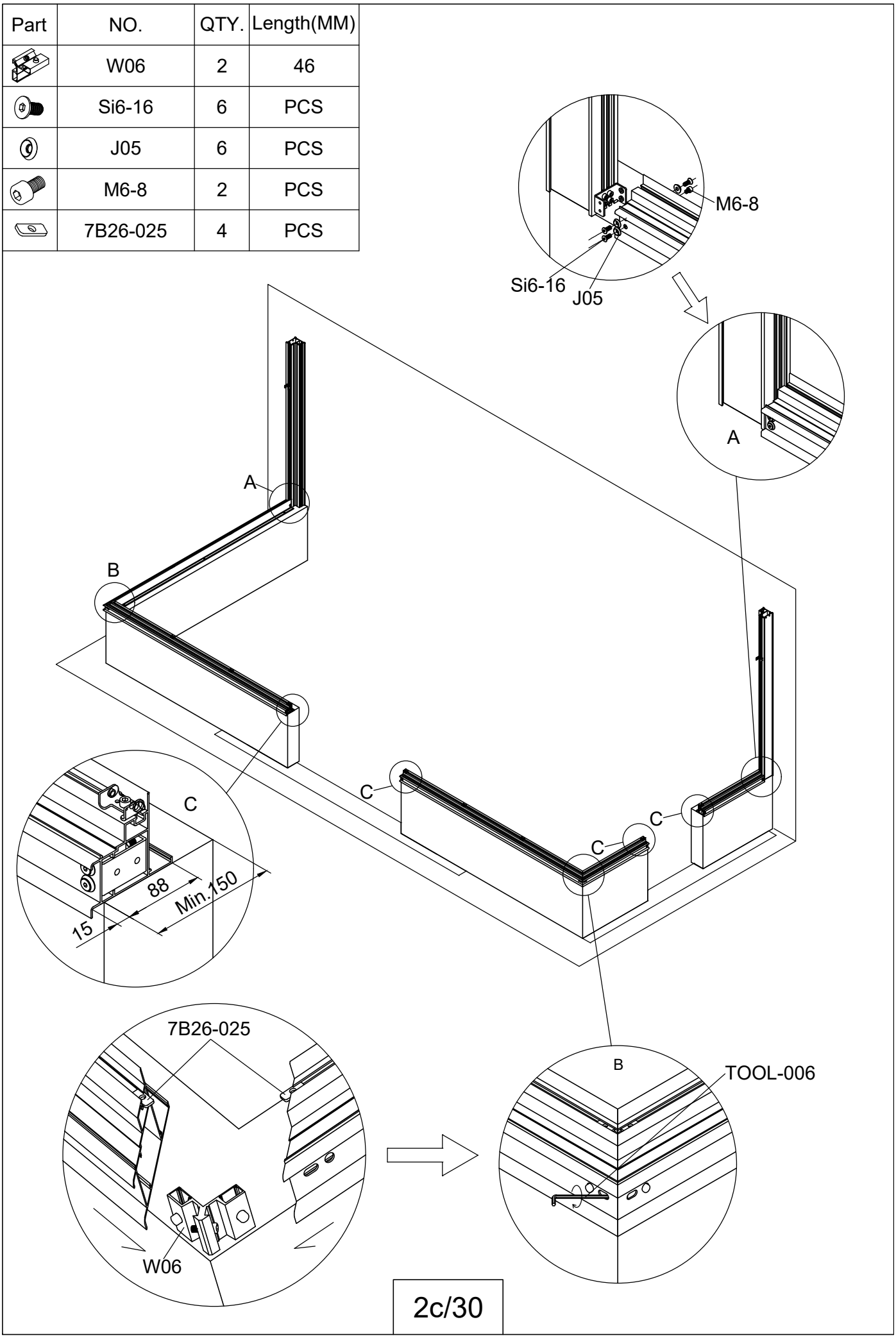

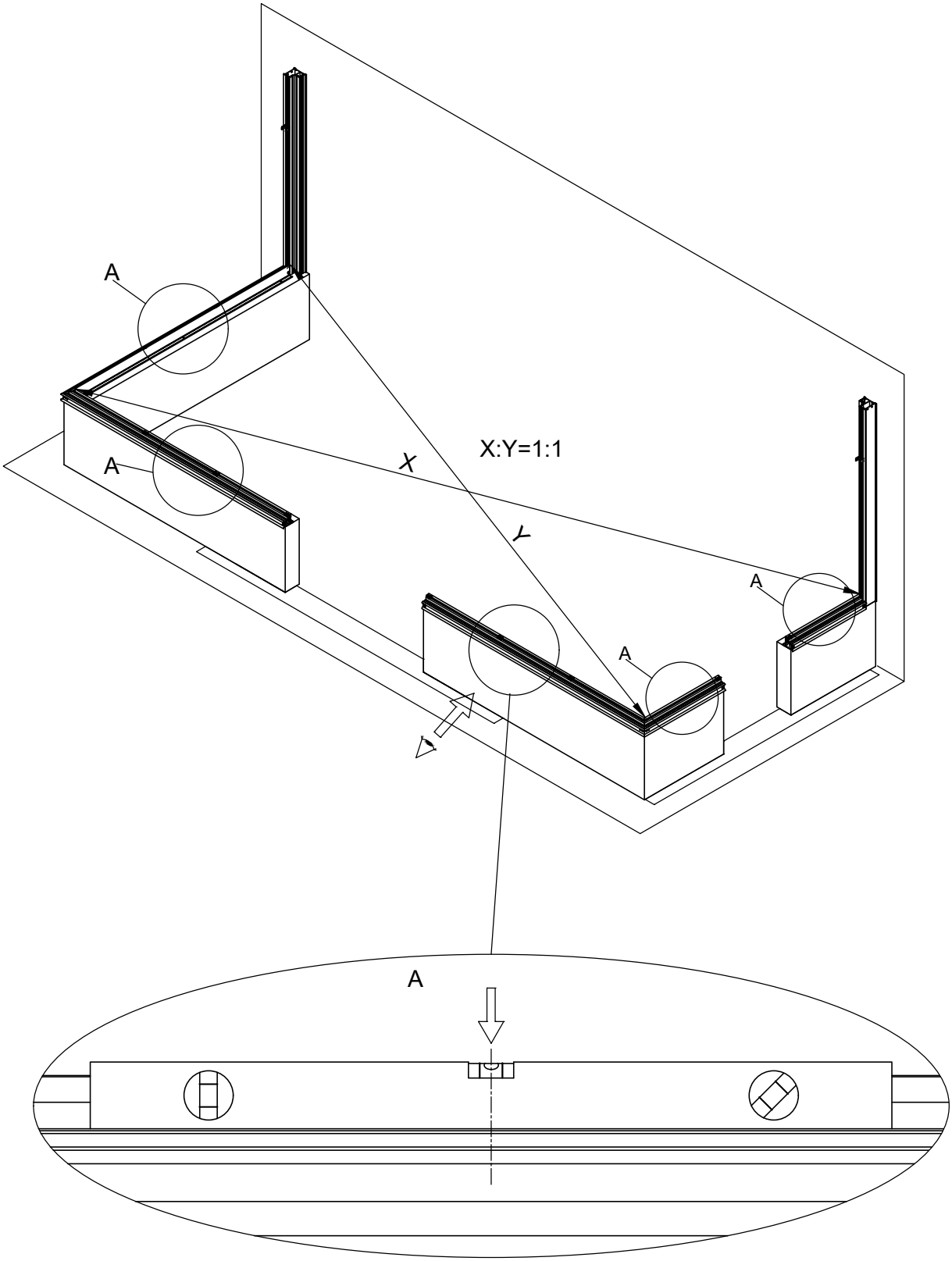
A
A
X:Y=1:1
X
Y
A
A
A

Part	NO.	QTY.	Length(MM)
	PS8-80	11	PCS

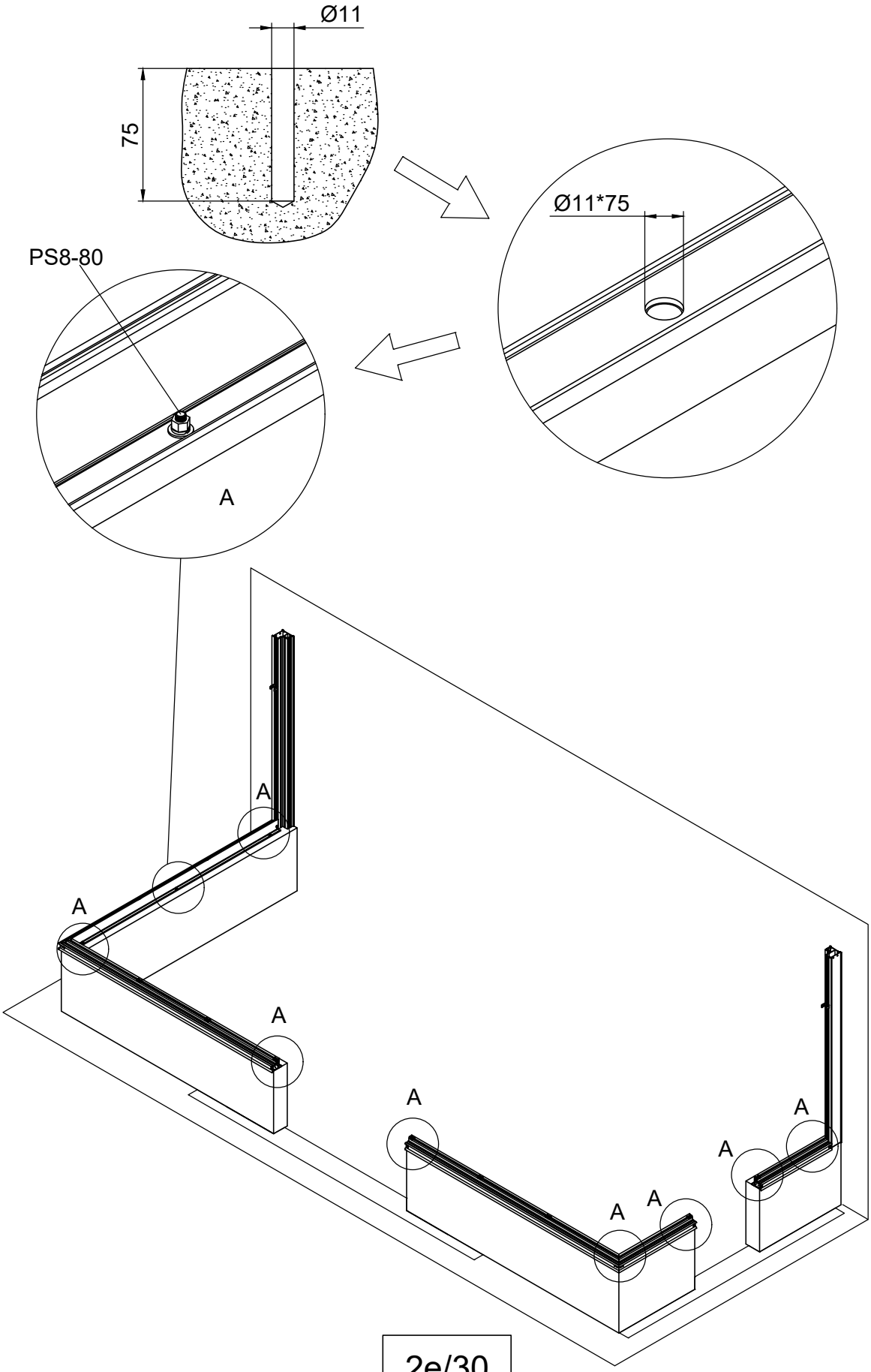

Part	Product	NO.	Length(MM)	QTY.	CTN NO.	Code
	3172	40A-S11-4AR	749	1	3043PA-S-4	A011
	3173	40A-S11-5AR	1125	1	3171P-S-5D	
	3174	40A-S11-6AR	1500	1	3171P-S-6D	
	3175	40A-S11-7AR	1876	1	3171P-S-7D	
	3176	40A-S11-8AR	2251	1	3171P-S-8D	
	3172	40A-S11-4AL	749	1	3043P-S-4	A012
	3173	40A-S11-5AL	1125	1	3171P-S-5D	
	3174	40A-S11-6AL	1500	1	3171P-S-6D	
	3175	40A-S11-7AL	1876	1	3171P-S-7D	
	3176	40A-S11-8AL	2251	1	3171P-S-8D	

Part	NO.	Length(MM)	QTY.	CTN NO.
	30LA-Y12L-A	2272	1	3171P-S-3F
	40A-Y13L-A	779	1	3171P-S-4-REAR
	40LA-Y13-A	779	1	3171P-S-4-REAR

Part	NO.	QTY.	Length(MM)
	J09	4	PCS

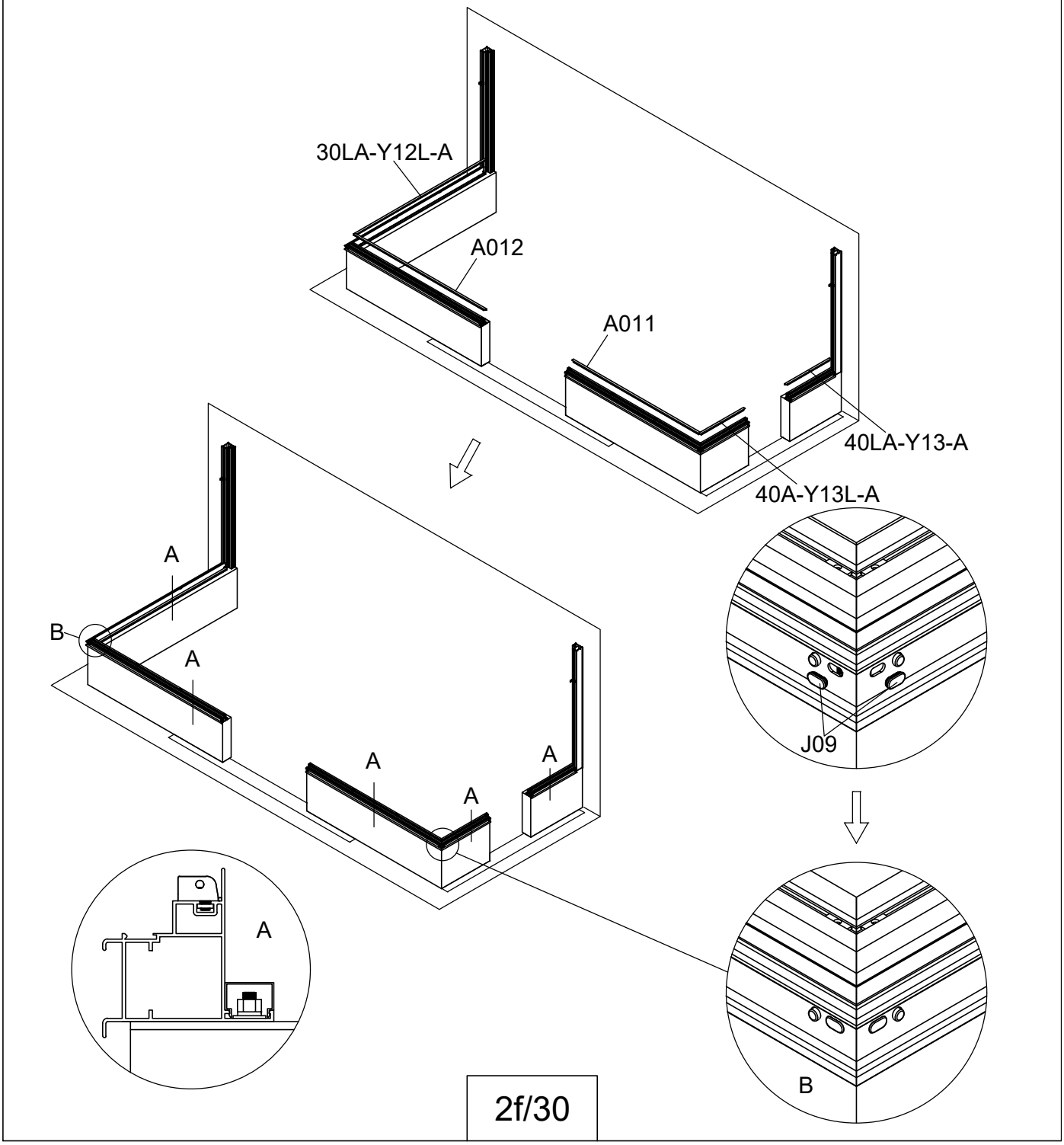

Part	NO.	QTY.	Length(MM)
	7B26-017	2	PCS
	M6-8	4	PCS
	J08	1	PCS

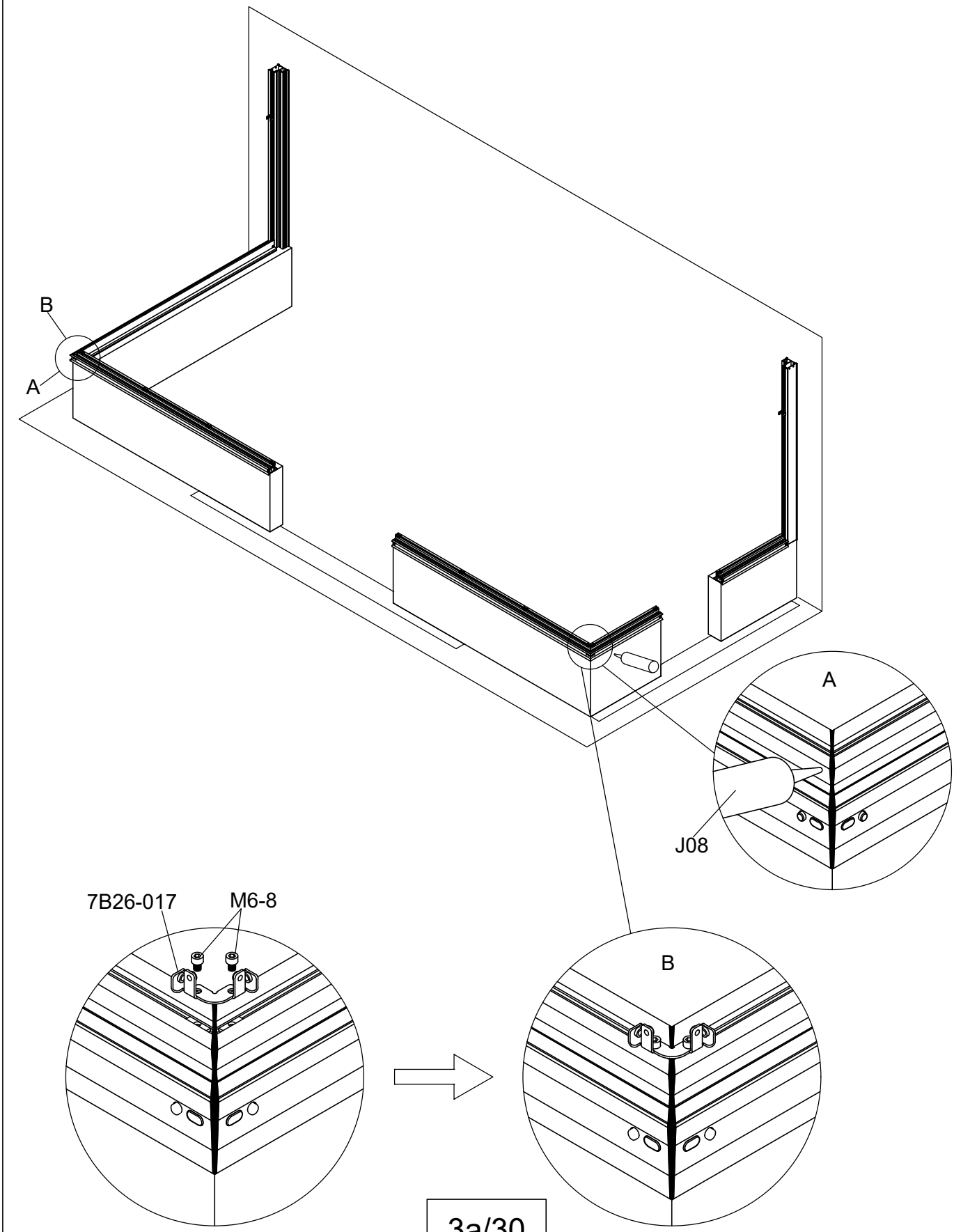

Part	NO.	QTY.	Length(MM)
	40A-Y20	2	1236
	Si6-16	4	PCS
	J05	4	PCS
	M6-8	4	PCS

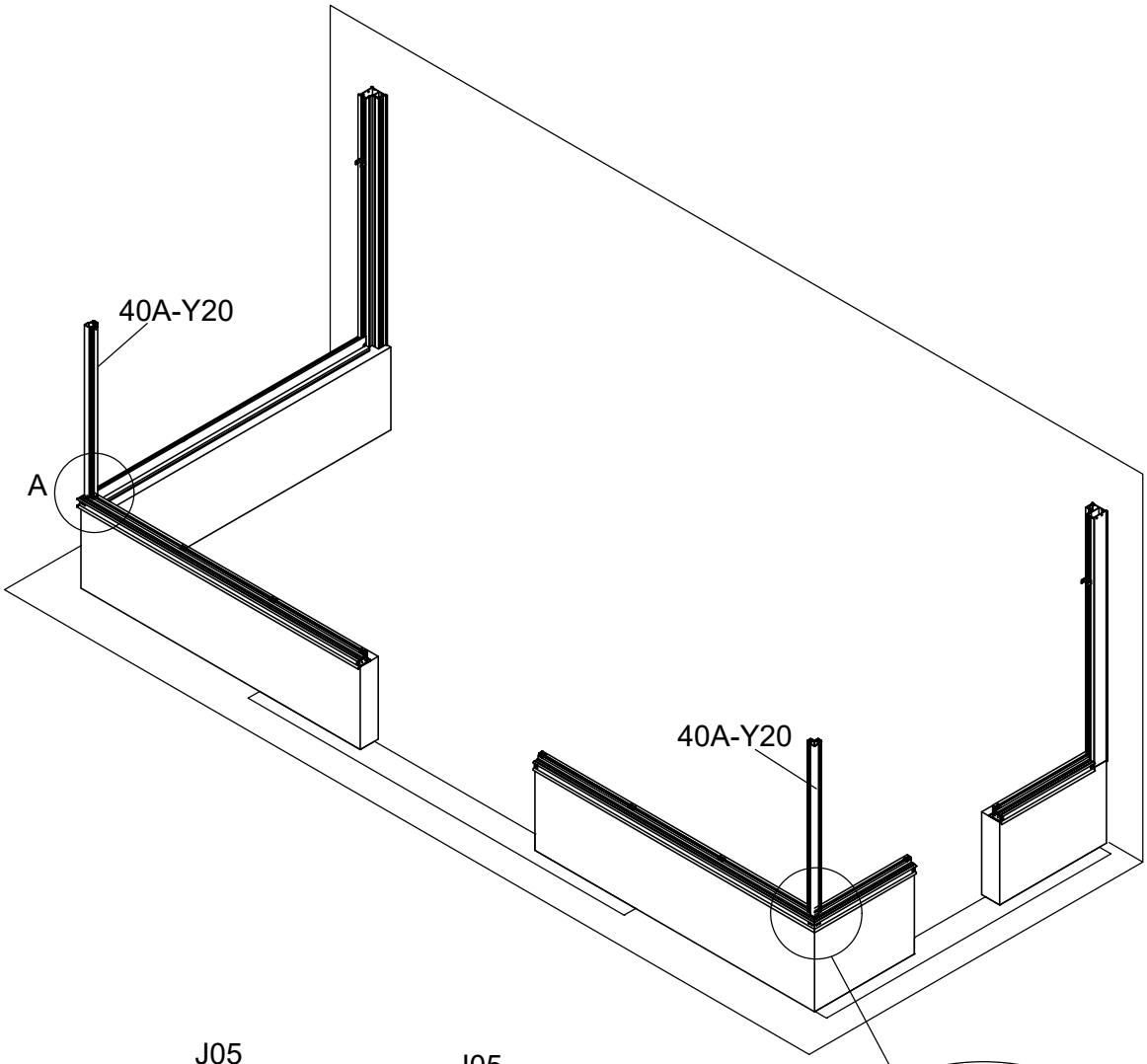

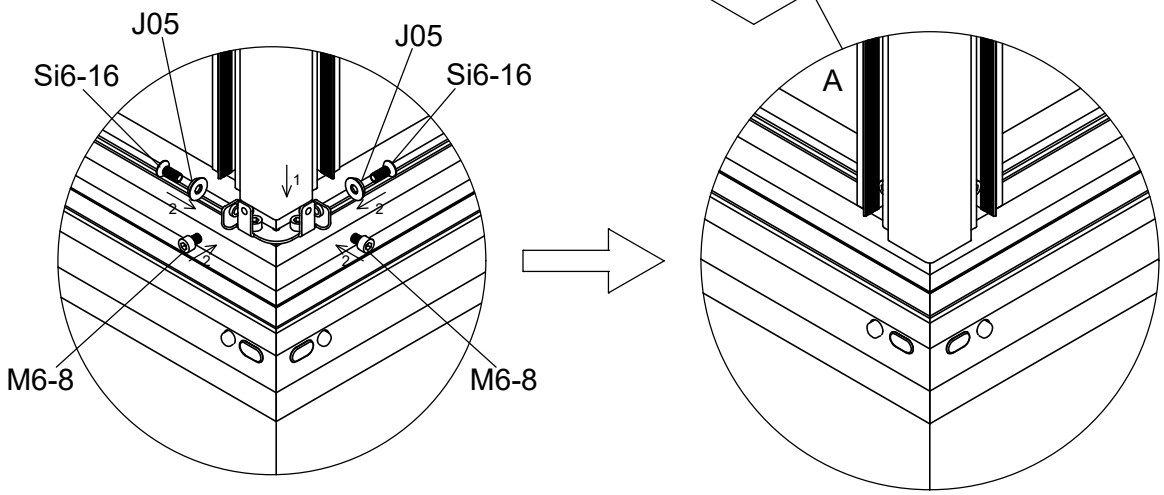

Part	NO.	QTY.	Length(MM)
	30L-S60R	1	2272
	30L-S60L	1	2272
	Si6-16	10	PCS
	J05	10	PCS

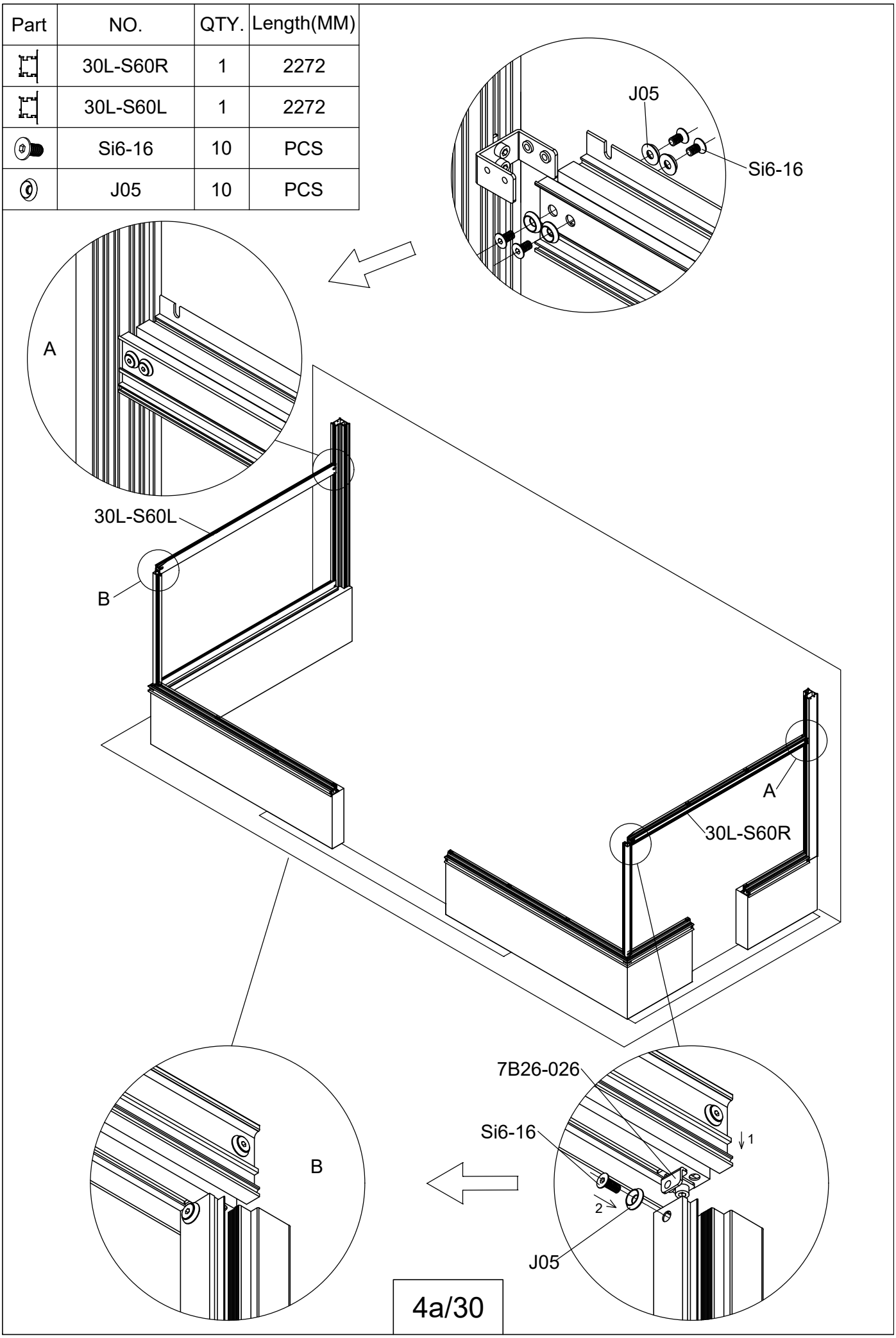

Part	NO.	QTY.	Length(MM)
	Si6-16	2	PCS
	J05	2	PCS
	L06	2	1400

Part	Product	NO.	Length(MM)	QTY.	Code
	3172	40L-Y62-4-11	3134	1	A003
	3173	40L-Y62-5-11	3885		
	3174	40L-Y62-6-11	4636		
	3175	40L-Y62-7-11	5387		
	3176	40L-Y62-8-11	6138		

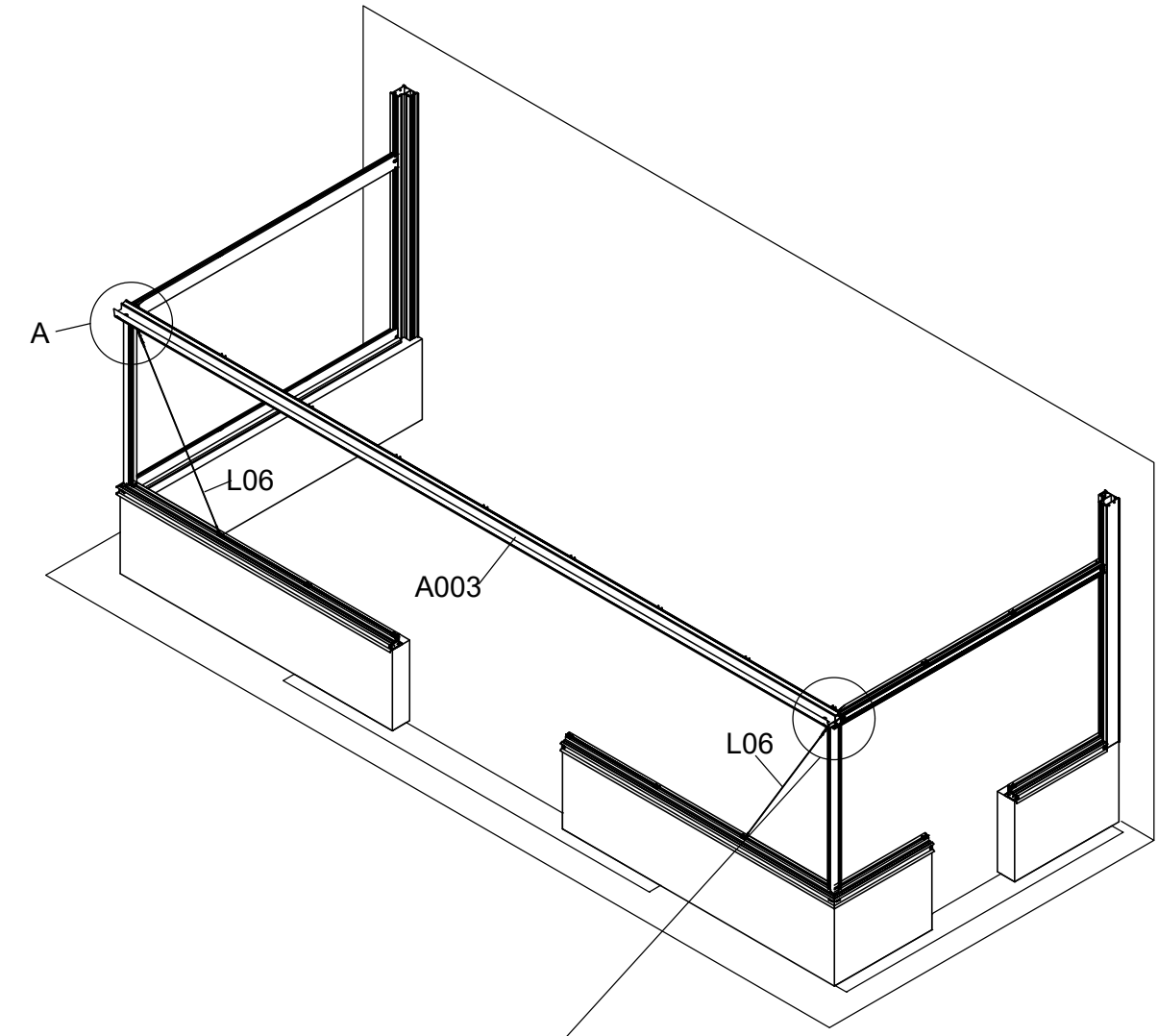

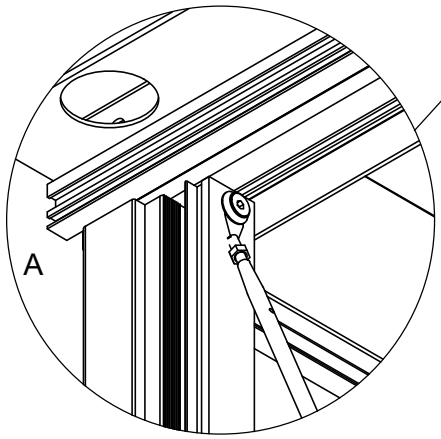

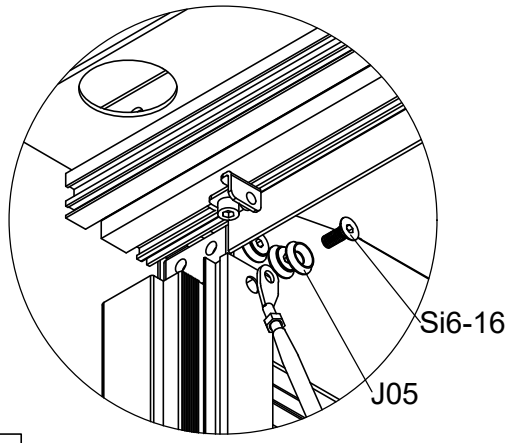

Part	NO.	QTY.	Length(MM)
	7B26-077	2	PCS
	M8-20	4	PCS
	7C28-004	4	PCS

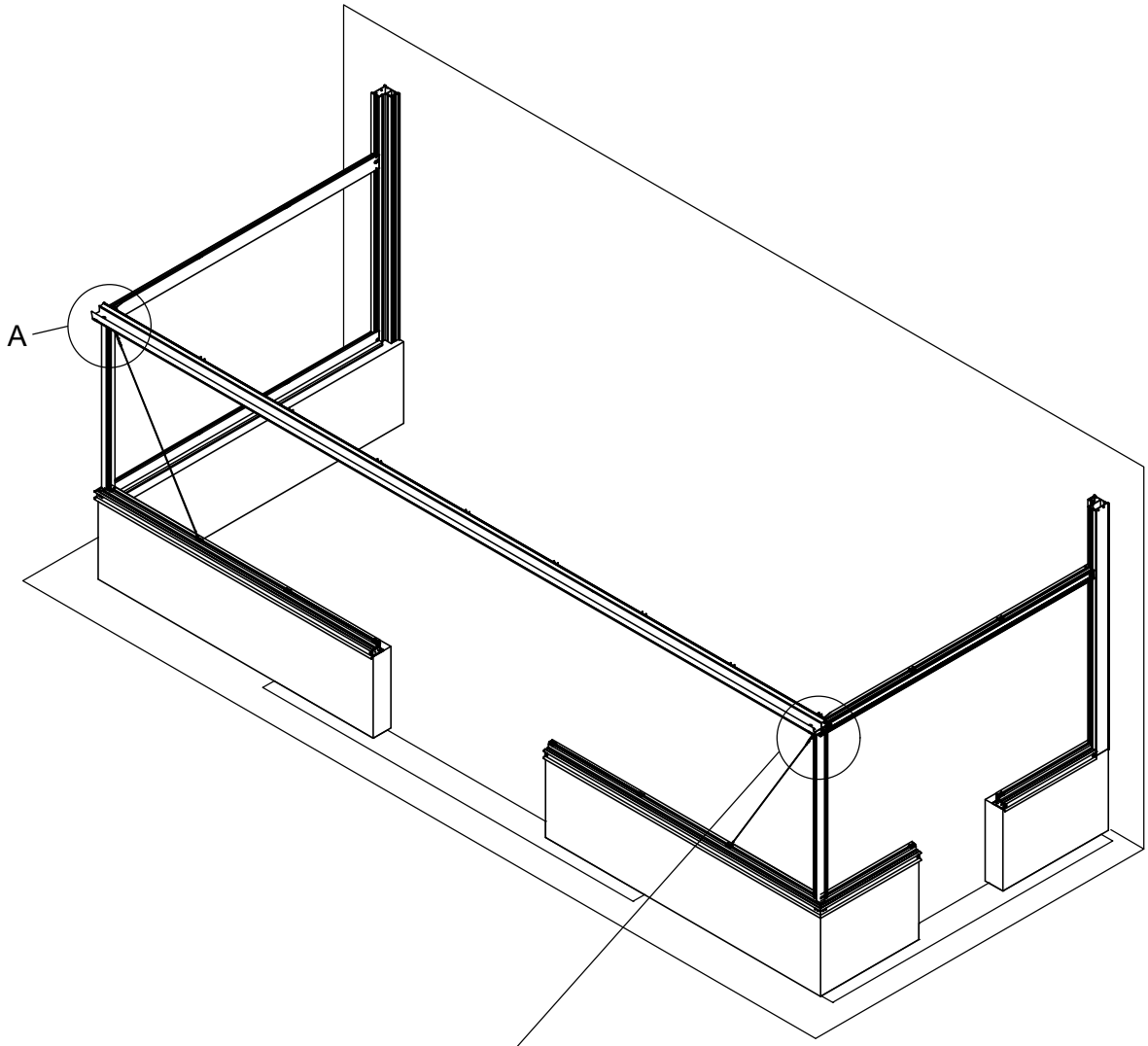

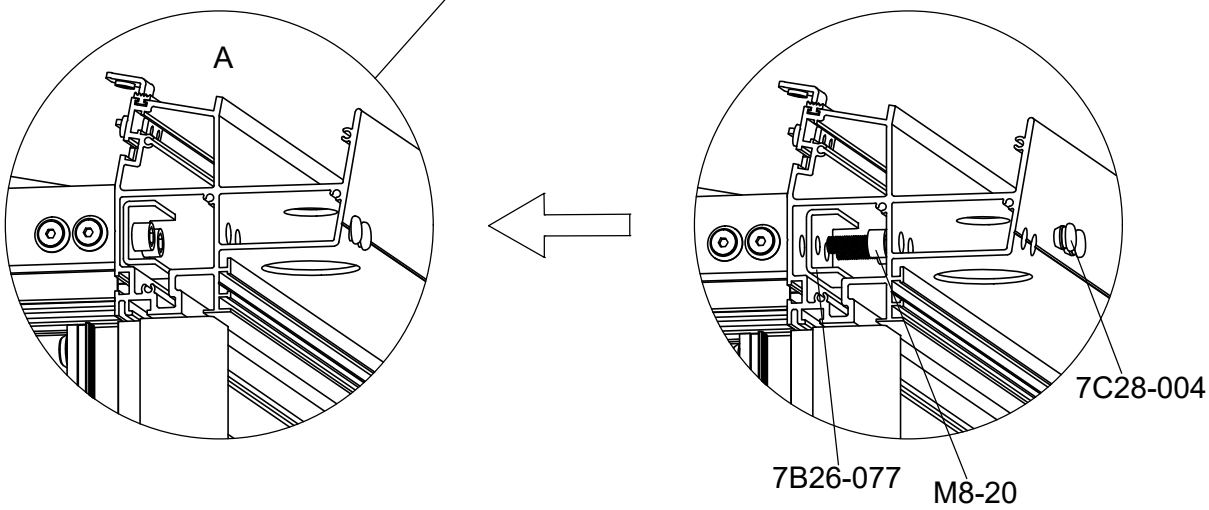

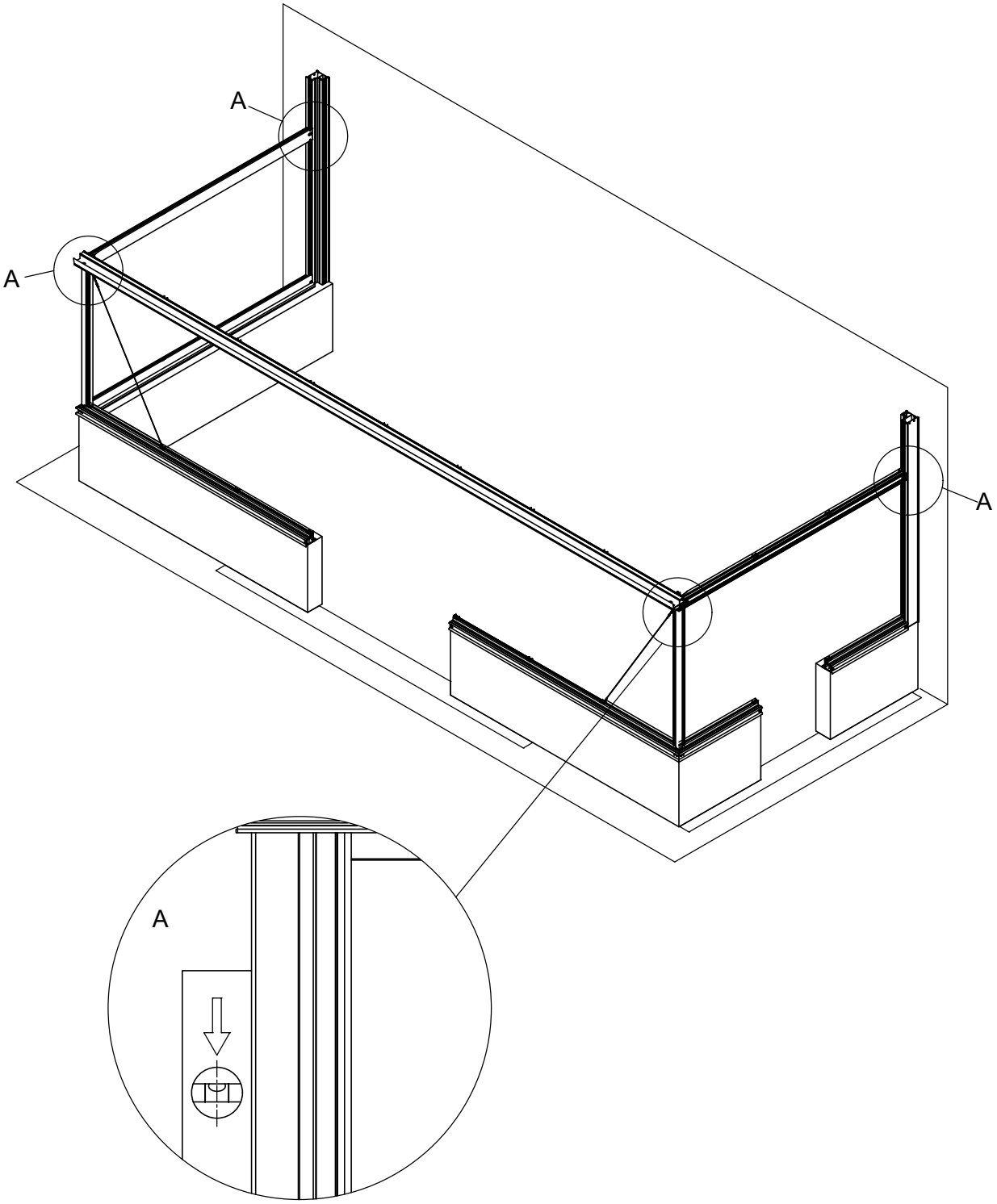
A
A
A
A

Part	Product	NO.	Length(MM)	QTY.	Code
	3172	40LA-Y63-4-11	3157	1	A004
	3173	40LA-Y63-5-11	3908		
	3174	40LA-Y63-6-11	4659		
	3175	40LA-Y63-7-11	5410		
	3176	40LA-Y63-8-11	6161		

Part	NO.	QTY.					Length(MM)
		3172	3173	3174	3175	3176	
	40X-P80E-B	1	2	2	3	3	801
	T07	2	4	4	6	6	PCS

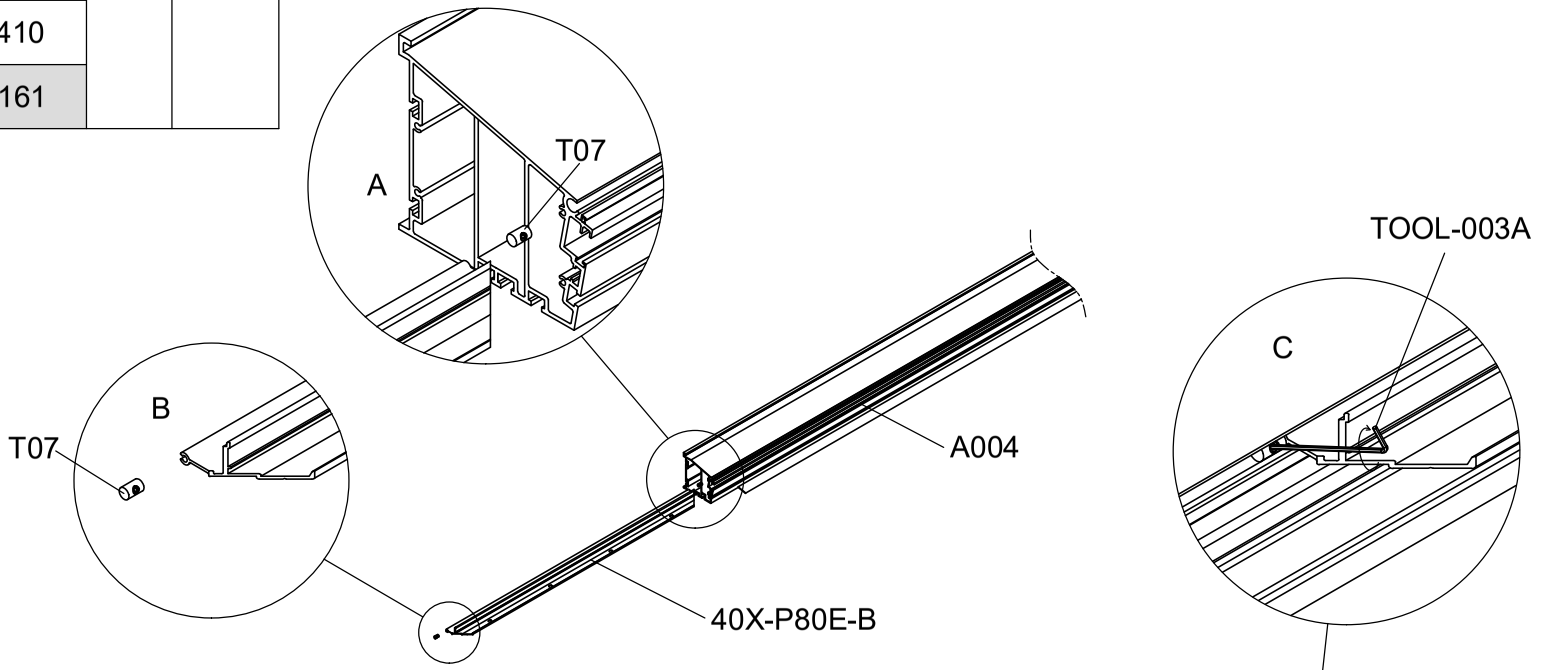

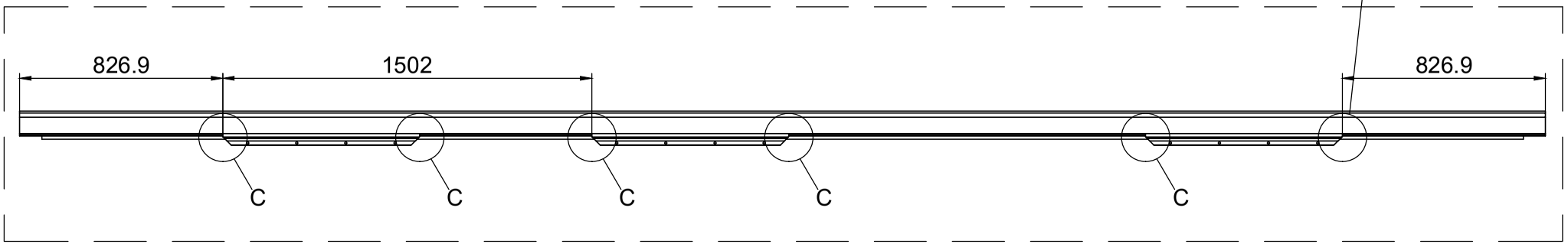

Part	NO.	QTY.	Length(MM)
	Si6-25	6	PCS
	J05	6	PCS

Part	Product	NO.	Length(MM)	QTY.	Code
	3172	40LA-Y63-4-11	3157	1	A004
	3173	40LA-Y63-5-11	3908		
	3174	40LA-Y63-6-11	4659		
	3175	40LA-Y63-7-11	5410		
	3176	40LA-Y63-8-11	6161		

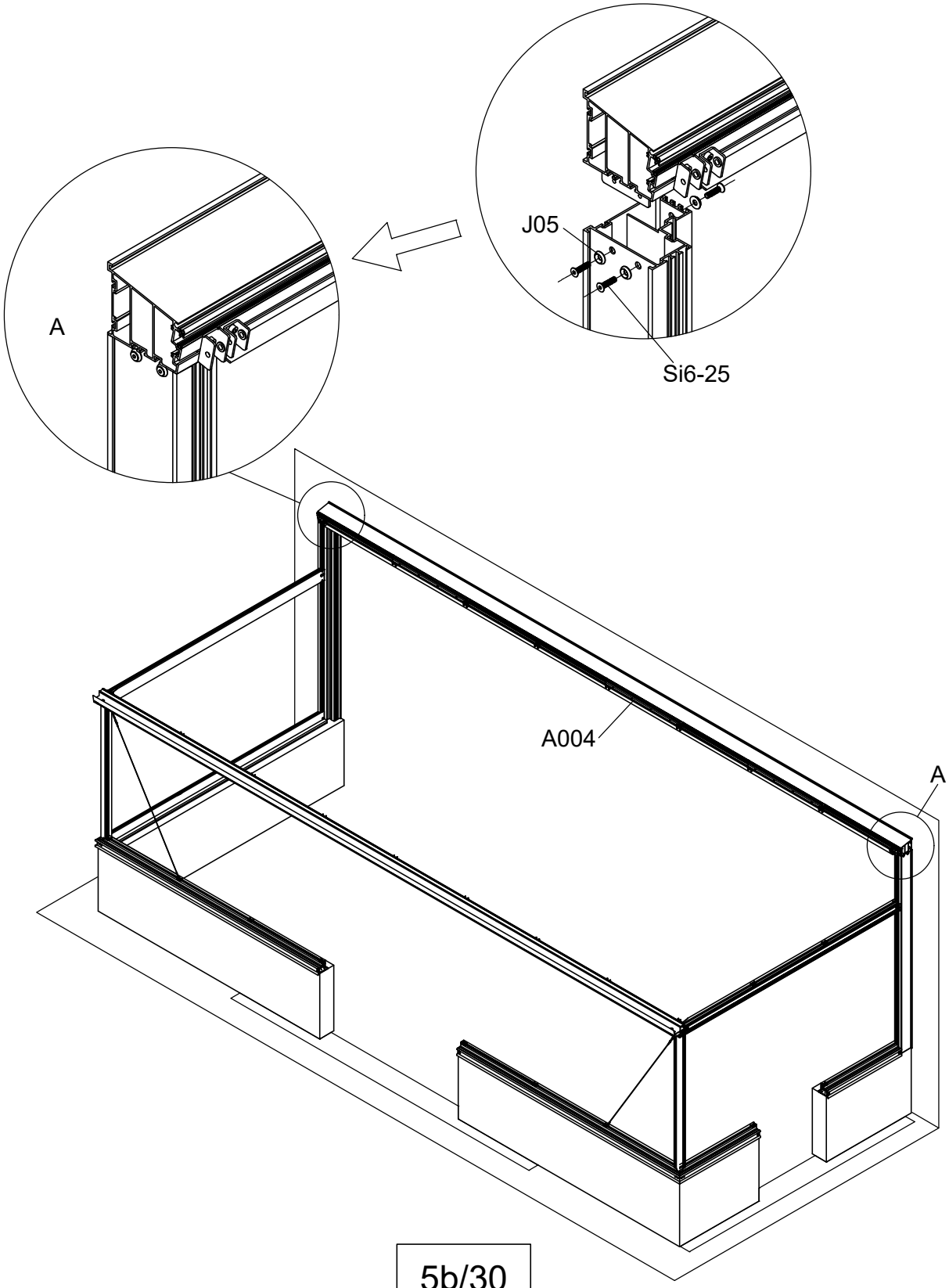

Part	NO.	QTY.					Length (MM)	
		3172	3173	3174	3175	3176		
	PSJ10-80	18	20	20	22	22	PCS	For Concrete
	DQ8-16	18	20	20	22	22	PCS	For Concrete/For Wood
	SW8-80	18	20	20	22	22	PCS	For Concrete/For Wood

Part	Product	NO.	Length(MM)	QTY.	Code
	3172	40LA-Y26A-4	3157	1	A005
	3173	40LA-Y26A-5	3908		
	3174	40LA-Y26A-6	4659		
	3175	40LA-Y26A-7	5410		
	3176	40LA-Y26A-8	6161		
	3172	40LA-Y26B-4	2899	1	A006
	3173	40LA-Y26B-5	3650		
	3174	40LA-Y26B-6	4401		
	3175	40LA-Y26B-7	5152		
	3176	40LA-Y26B-8	5903		

Part	NO.	QTY.	Length(MM)
	30LA-Y25A-11	2	1814
	30LA-Y25B-11	2	1765

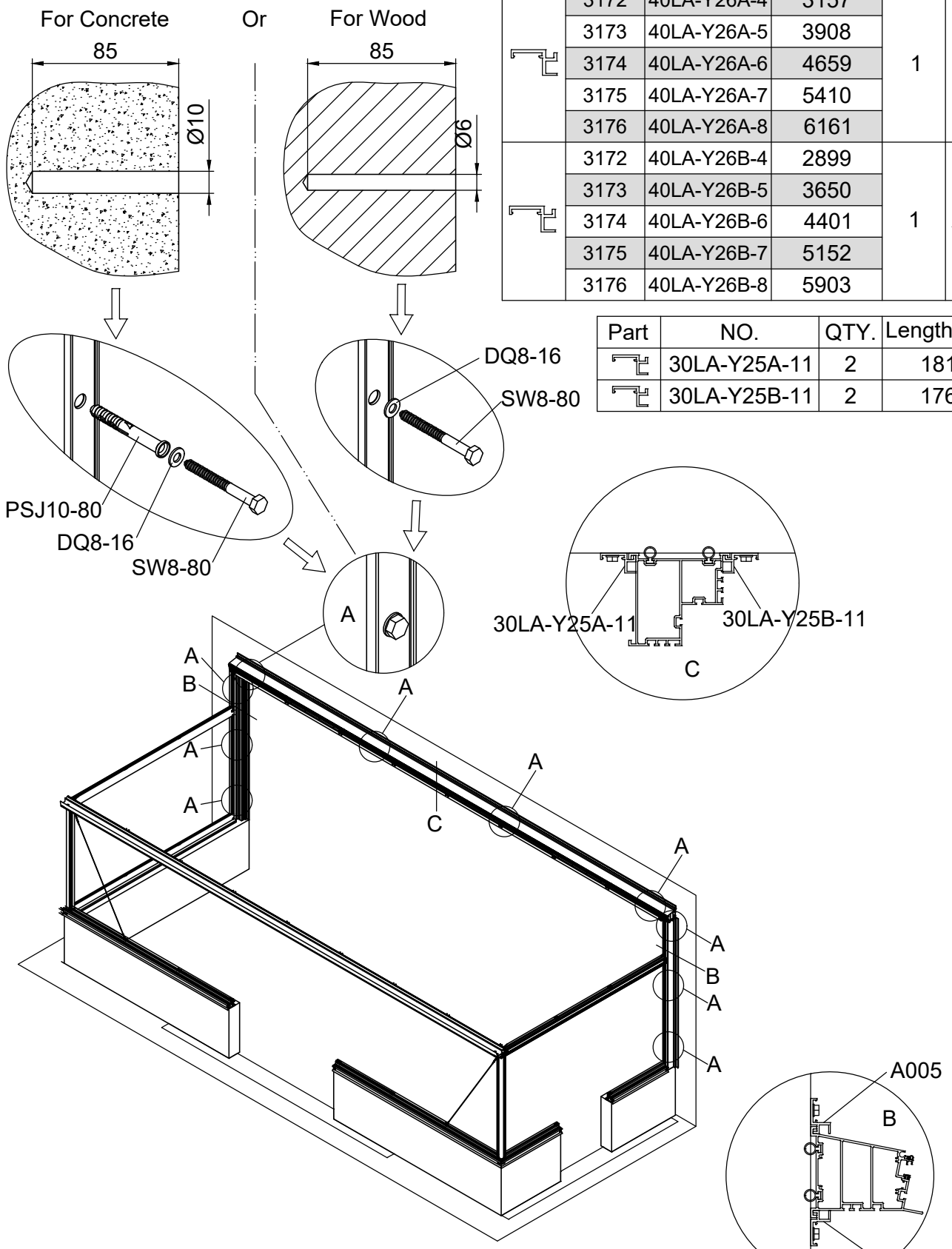

Part	NO.	QTY.	Length(MM)
	30LA-Y27A-11	2	1814
	30LA-Y27B-11	2	1765

Part	Product	NO.	Length(MM)	QTY.	Code
	3172	40LA-Y28A-4	3157	1	A007
	3173	40LA-Y28A-5	3908		
	3174	40LA-Y28A-6	4659		
	3175	40LA-Y28A-7	5410		
	3176	40LA-Y28A-8	6161		
	3172	40LA-Y28B-4	2917	1	A008
	3173	40LA-Y28B-5	3668		
	3174	40LA-Y28B-6	4419		
	3175	40LA-Y28B-7	5170		
	3176	40LA-Y28B-8	5921		

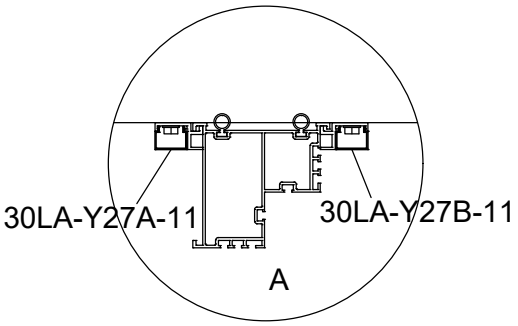

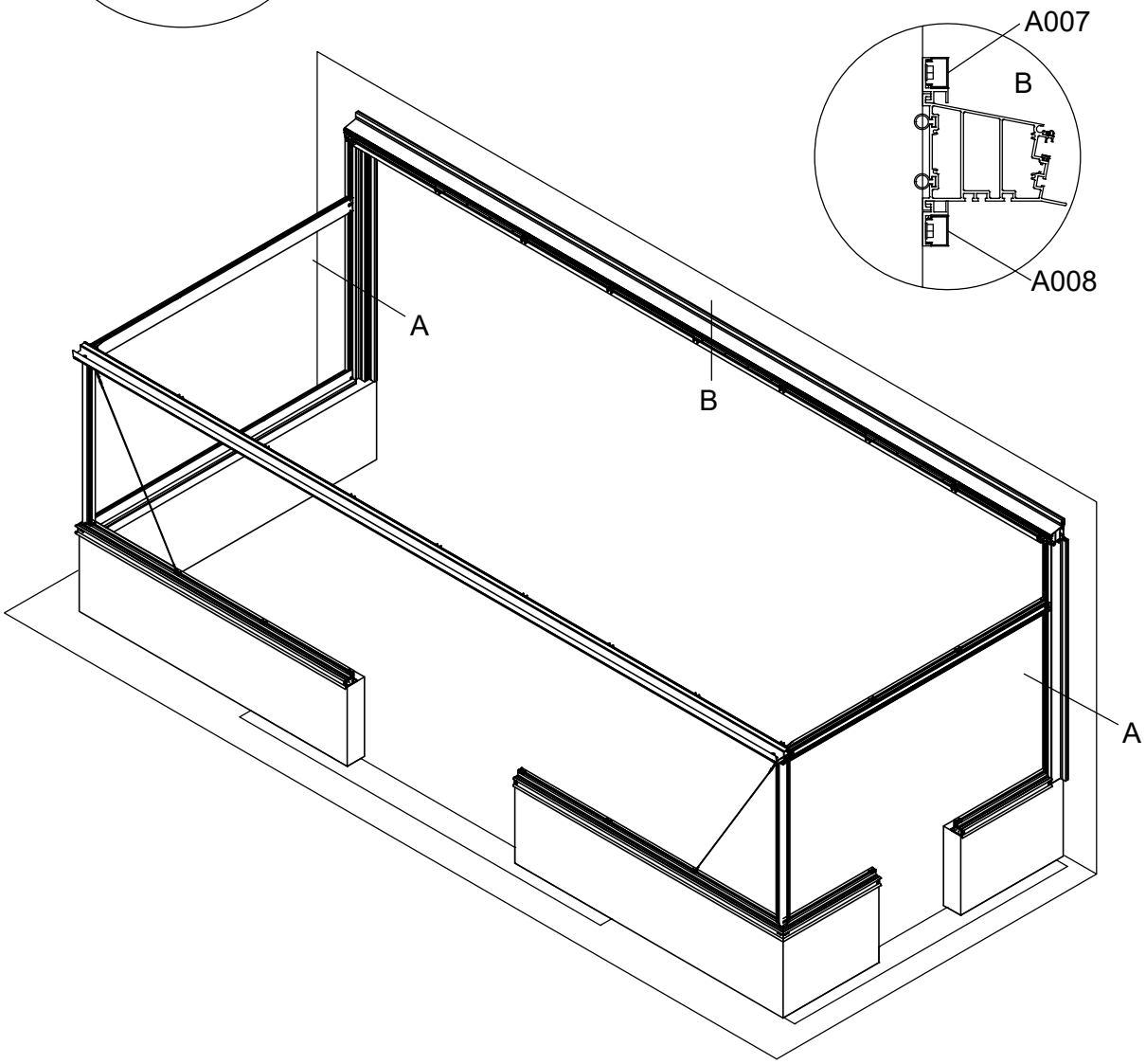

Part	NO.	QTY.	Length(MM)
	7C26-031	8	PCS

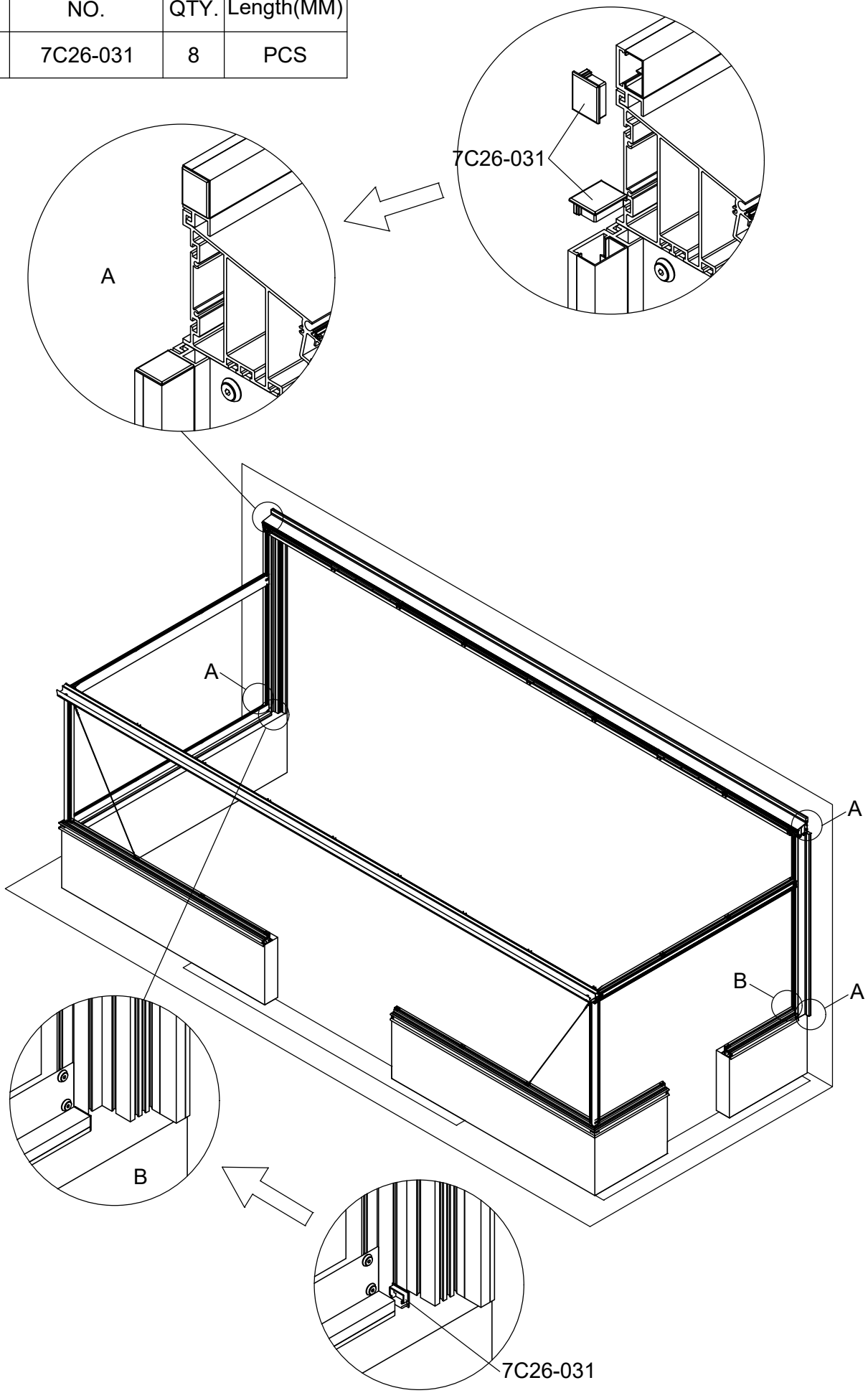

If you have chosen Side Windows, please assemble them from this step.
Please refer to the Side Window Instructions Page "7W1A-V3S 6/16 - 16/16".

Om du har valt sidofönster ska du montera dem från och med det här steget.
Se sidan med instruktioner för sidofönster "7W1A-V3S 6/16 - 16/16".

Hvis du har valgt sidevinduer, skal du montere dem fra dette trin og fremefter.
Se side 7W1A-V3S 6/16 - 16/16 i vejledningen til sidevinduer.

Hvis du har valgt Sidevinduer, vennligst sett dem sammen fra dette trinnet.
Vennligst se sidevindusinstruksjonene "7W1A-V3S 6/16 - 16/16".

Jos olet valinnut sivuikkunat, kokoa ne tästä vaiheesta alkaen.
Katso sivuikkunoiden ohjeet sivulta "7W1A-V3S 6/16 - 16/16".

Wenn Sie sich für Seitenfenster entschieden haben, montieren Sie diese bitte ab diesem Schritt.
Bitte beachten Sie die Anleitung für die Seitenfenster auf der Seite "7W1A-V3S 6/16 - 16/16".

Green Room®
BY WILLAB GARDEN

SH7W1A-V3S

If the Side Window is assembled on a new greenroom, please start with Page 6/16.
If the Side Window is added to an existing greenroom, please start with Page 1/16.

Vid montage på ett nytt Green Room, börja på sidan 6/16.
Vid eftermontage på ett befintligt Green Room börjar du på sidan 1/16.

Hvis sidevinduet monteres på et nyt Green Room, skal du starte på side 6/16.
Ved eftermontering på et eksisterende Green Room, skal du starte på side 1/16.

Hvis sidevinduet er montert på et nytt Green Room, start på side 6/16.
Ved ettermontering til et eksisterende Green Room, start på side 1/16.

Jos sivuikkuna asennetaan uuteen Green Room, aloita sivulta 6/16.
Jos sivuikkuna lisätään olemassa olevaan Green Room, aloita sivulta 1/16.

Wenn das Seitenfenster in einem neuen Green Room, montiert wird, beginnen Sie bitte mit Seite 6/16.
Wenn das Seitenfenster in einen bestehenden Green Room, eingebaut wird, beginnen Sie bitte mit Seite 1/16.

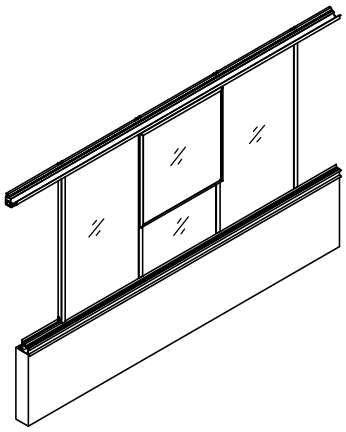

Part	NO.	QTY.	Length(MM)	CTN NO.
	7B26-036	1	PCS	3040P-D
	M6-8	2	PCS	3040P-D

3172	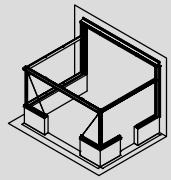
3174	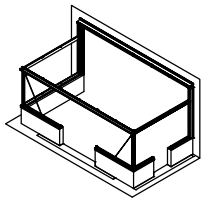
3176	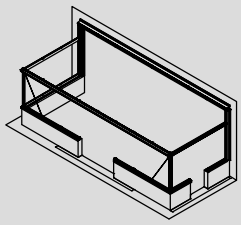

Disassemble this part.
Avmontera fästet från profilen på långsidan.
Afmonter beslaget fra profilen på langsiden.
Demonter festet fra profilen på langsiden.
Irrota profiilin pitkällä sivulla oleva kiinnike.
Demontieren Sie dieses Teil.

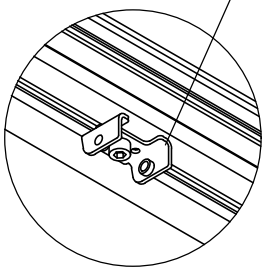

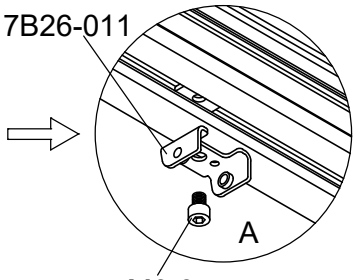

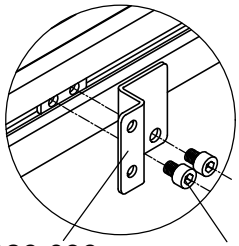

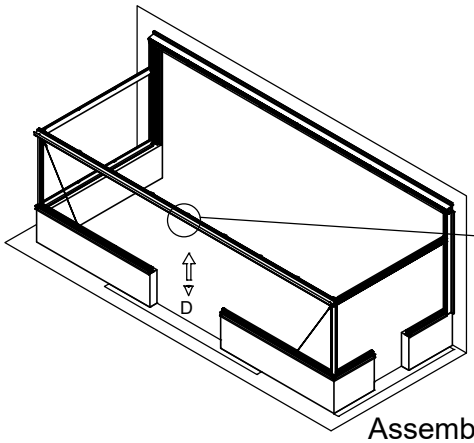

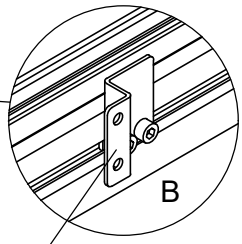

Assemble this part to the middle of the profiles.
Montera fästet i mitten av profilen.
Montere beslaget i midten af profilen.
Monter festet i midten av profilen.
Asenna kiinnike profiilin keskelle.
Montieren Sie dieses Teil in der Mitte der Profile.

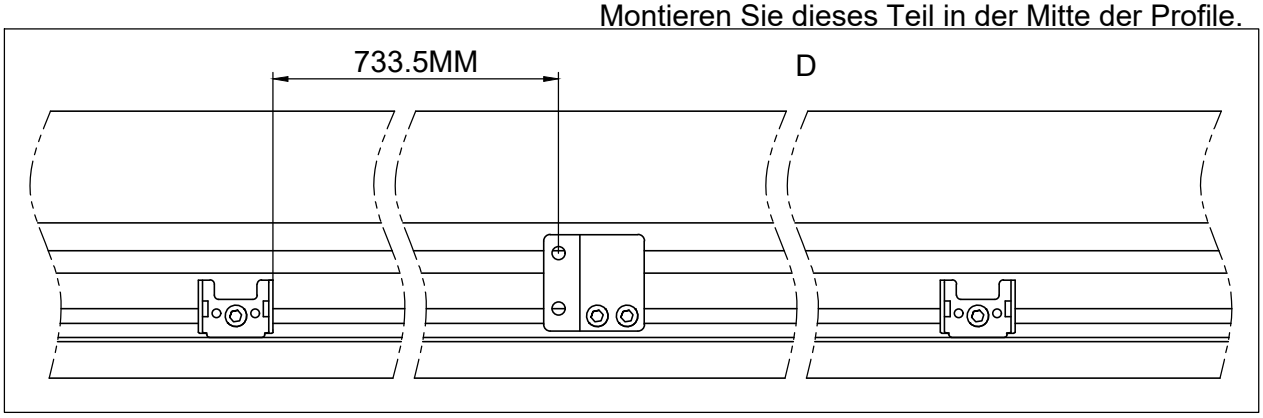

Part	NO.	QTY.	Length(MM)	CTN NO.
	7B26-036	1	PCS	3040P-D
	M6-8	2	PCS	3040P-D

3173	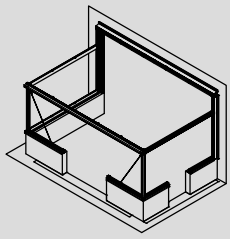
3175	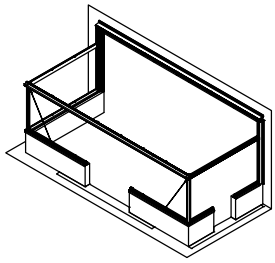

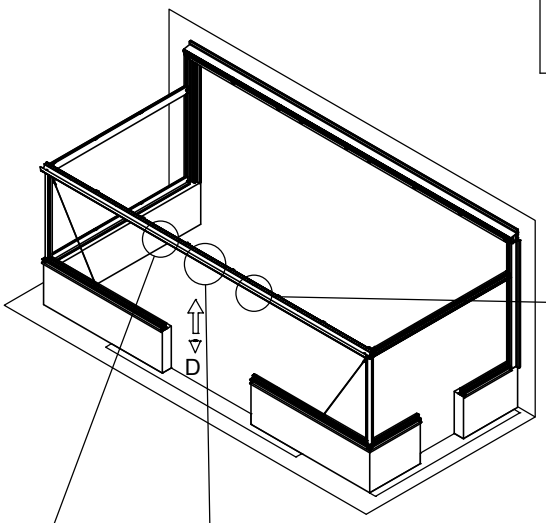

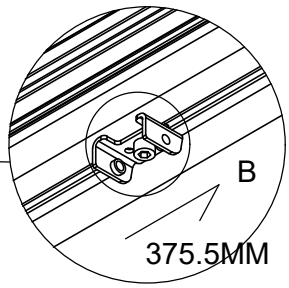

Assemble this part to the middle of the profiles.
Montera fästet i mitten av profilen.
Montere beslaget i midten af profilen.
Monter festet i midten av profilen.
Asenna kiinnike profiilin keskelle.
Montieren Sie dieses Teil in der Mitte der Profile.

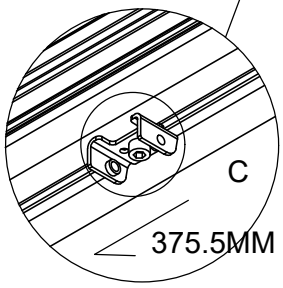

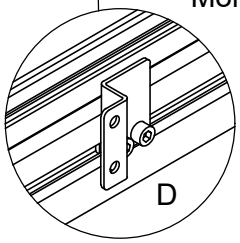

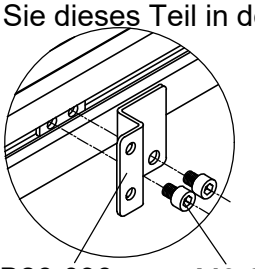

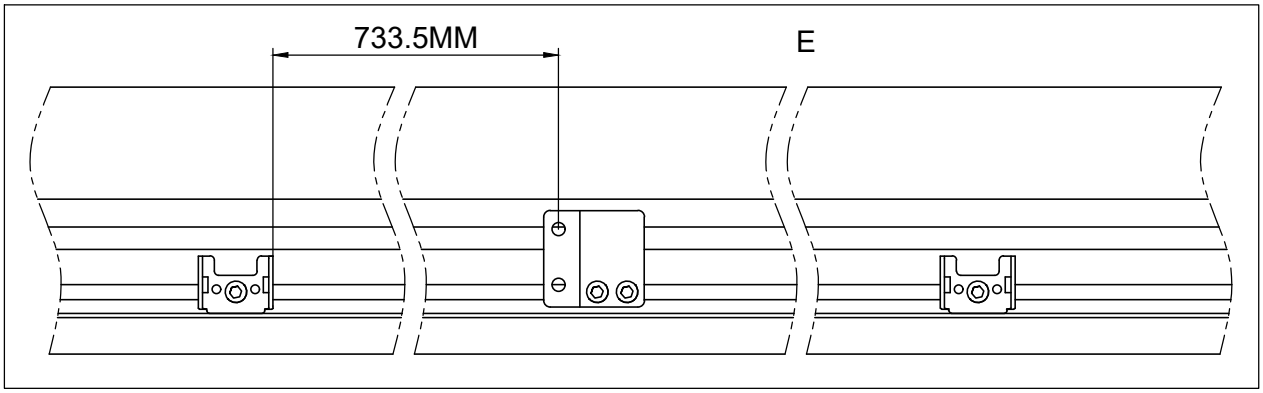

Part	NO.	QTY.	Length(MM)
	40LA-Y30	2	1235
	Si6-12	4	PCS
	J05	4	PCS
	MF6	4	PCS

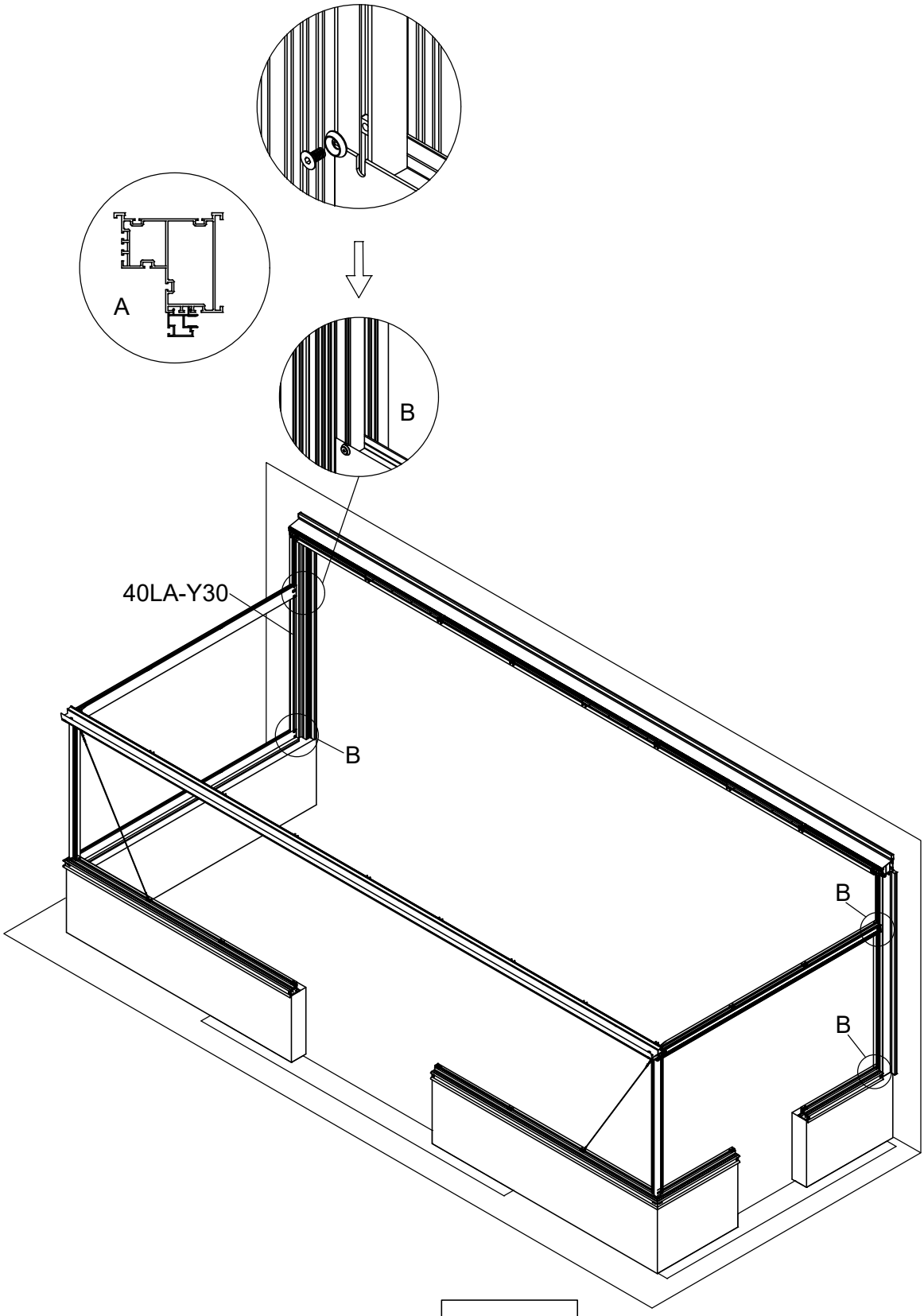

Part	NO.	QTY.					Length(MM)
		3172	3173	3174	3175	3176	
	40A-Y30	6	6	6	6	6	1235
	Si6-16	14	16	16	16	16	PCS
	J05	14	16	16	16	16	PCS

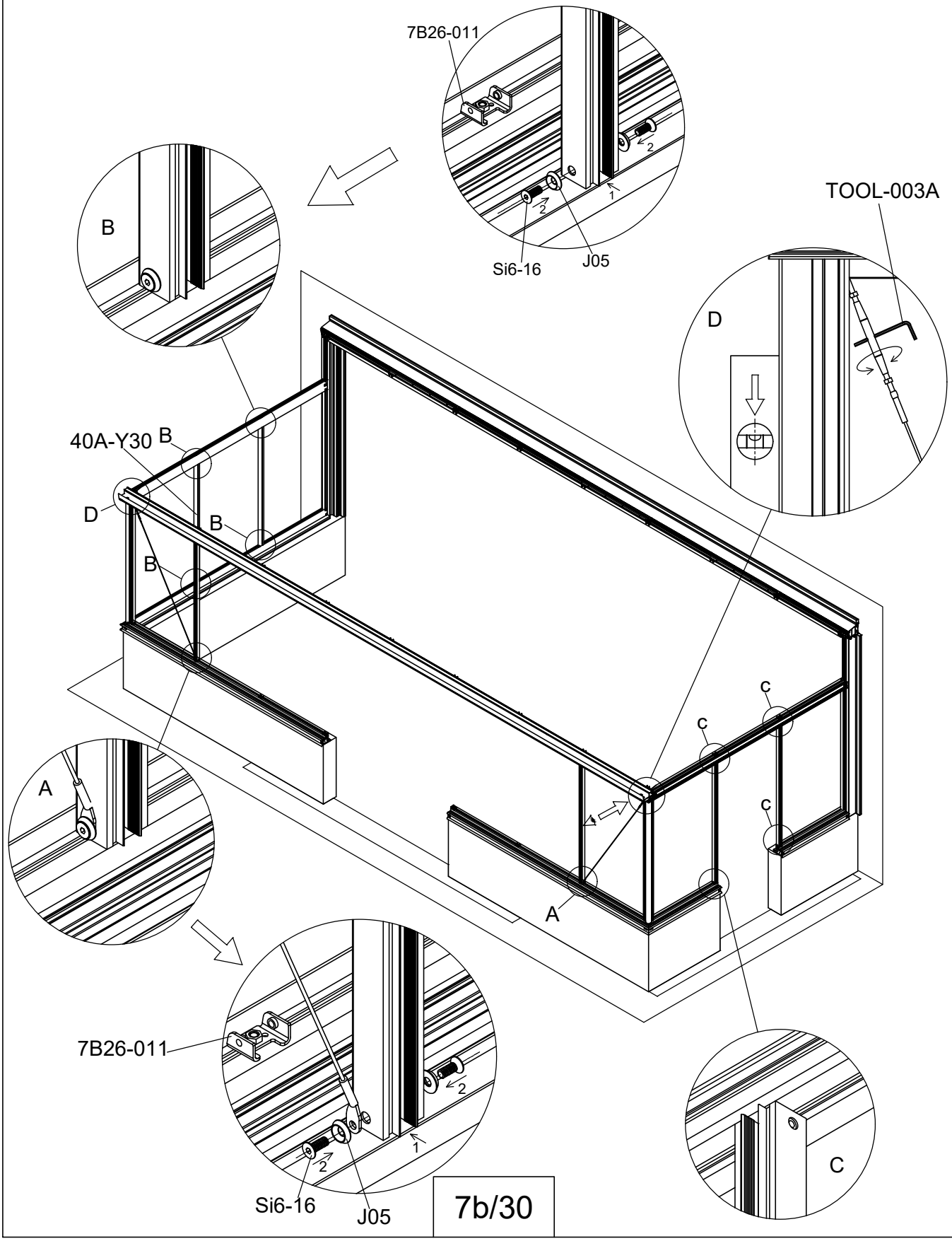

Part	NO.	QTY.					Length(MM)
		3172	3173	3174	3175	3176	
	40A-Y30	0	2	2	4	4	1235
	Si6-16	2	8	8	14	14	PCS
	J05	2	8	8	14	14	PCS

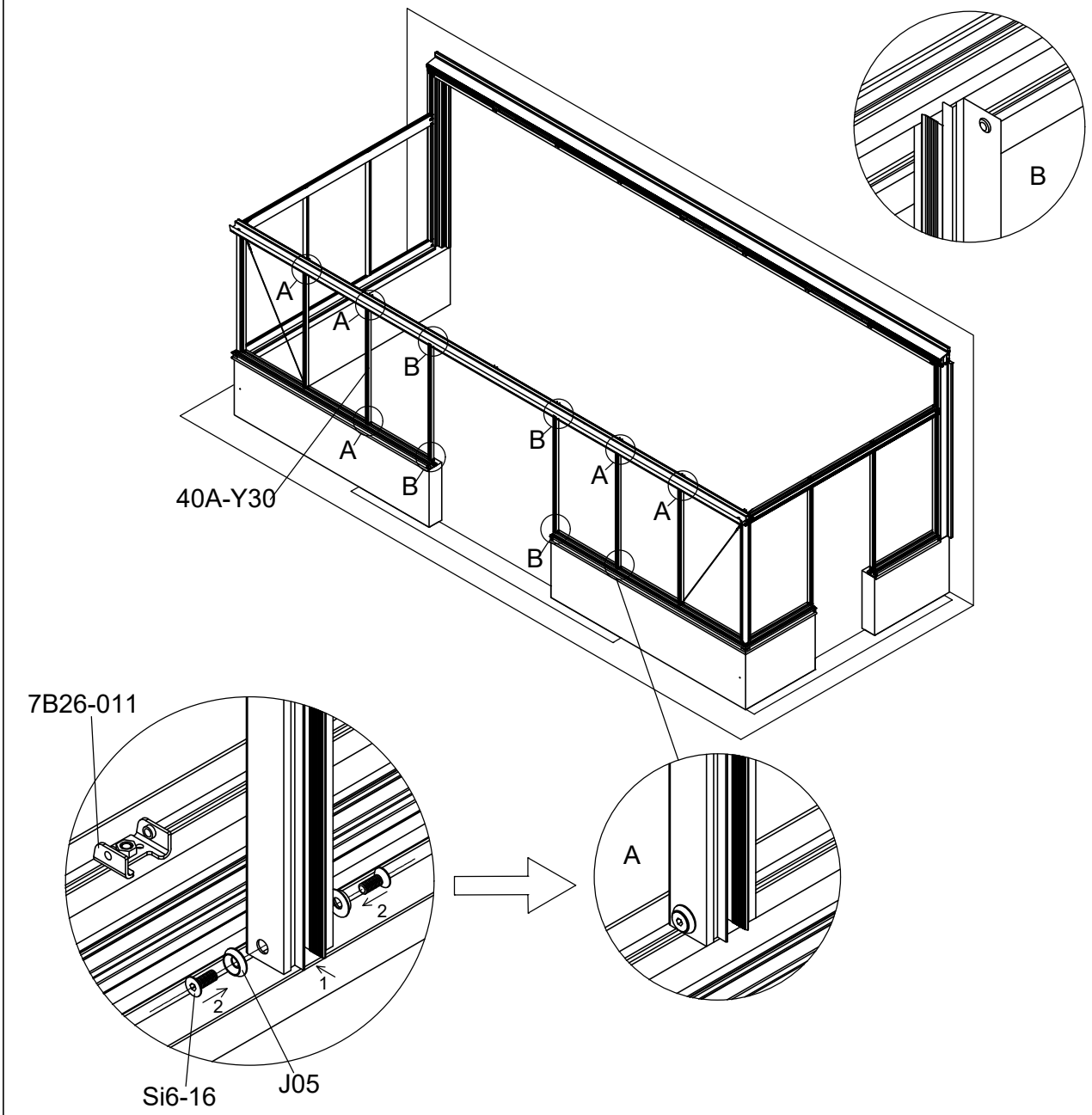

3172	3173	3174	3175	3176
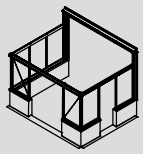	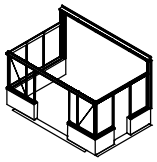	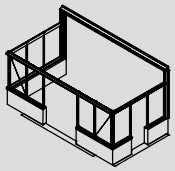	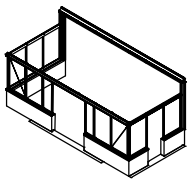	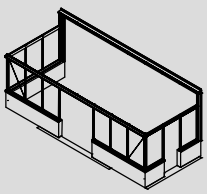

Part	NO.	QTY.	Length(MM)
	30L-Y31R-11	1	415
	30L-Y31L-11	1	415
	Si6-12	2	PCS
	J05	2	PCS
	MF6	2	PCS

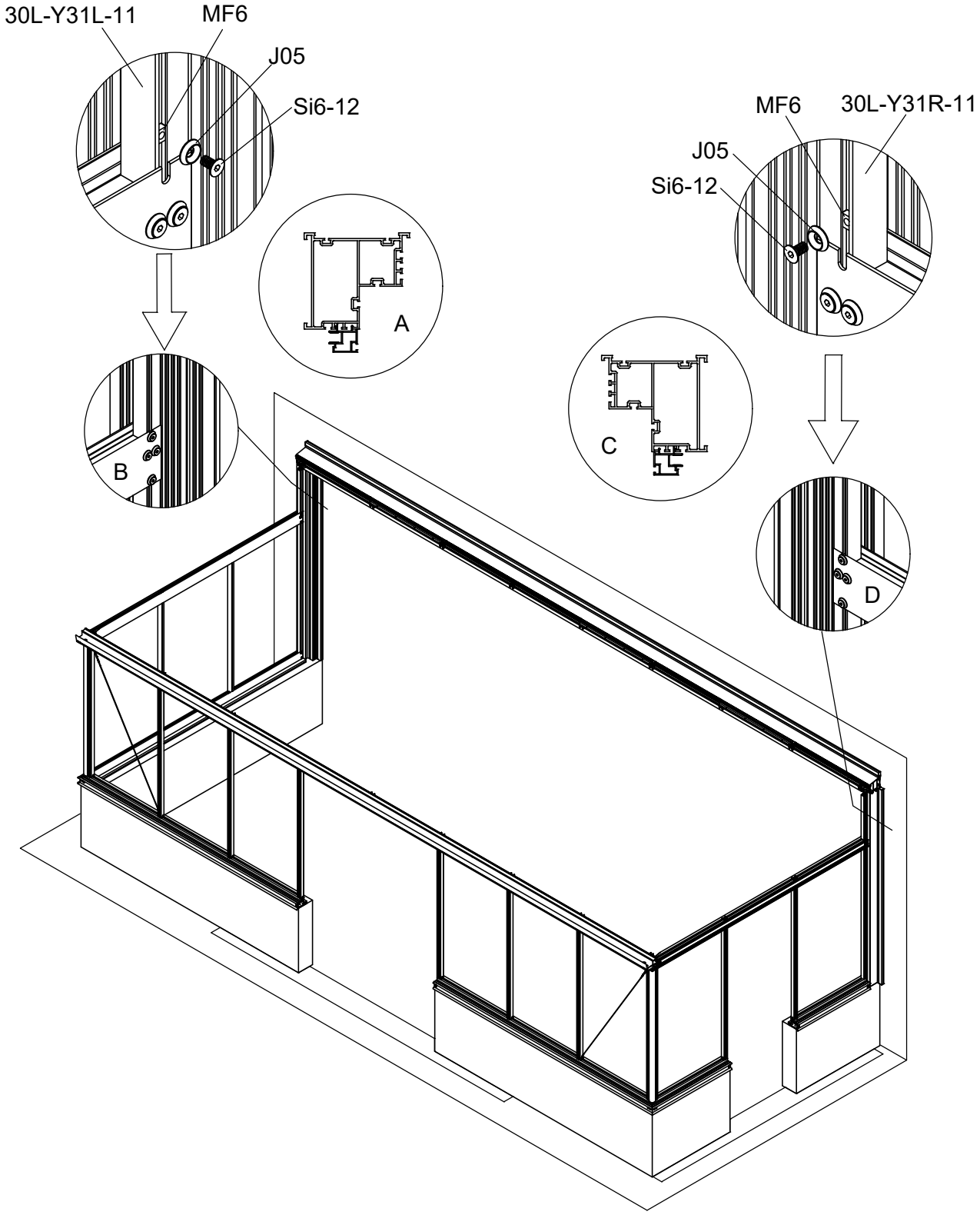

Part	NO.	QTY.	Length(MM)
	40X-Y31R-11A	1	124
	40X-Y31L-11A	1	124
	40X-Y31R-11B	1	270
	40X-Y31L-11B	1	270
	Si6-16	8	PCS
	J05	8	PCS

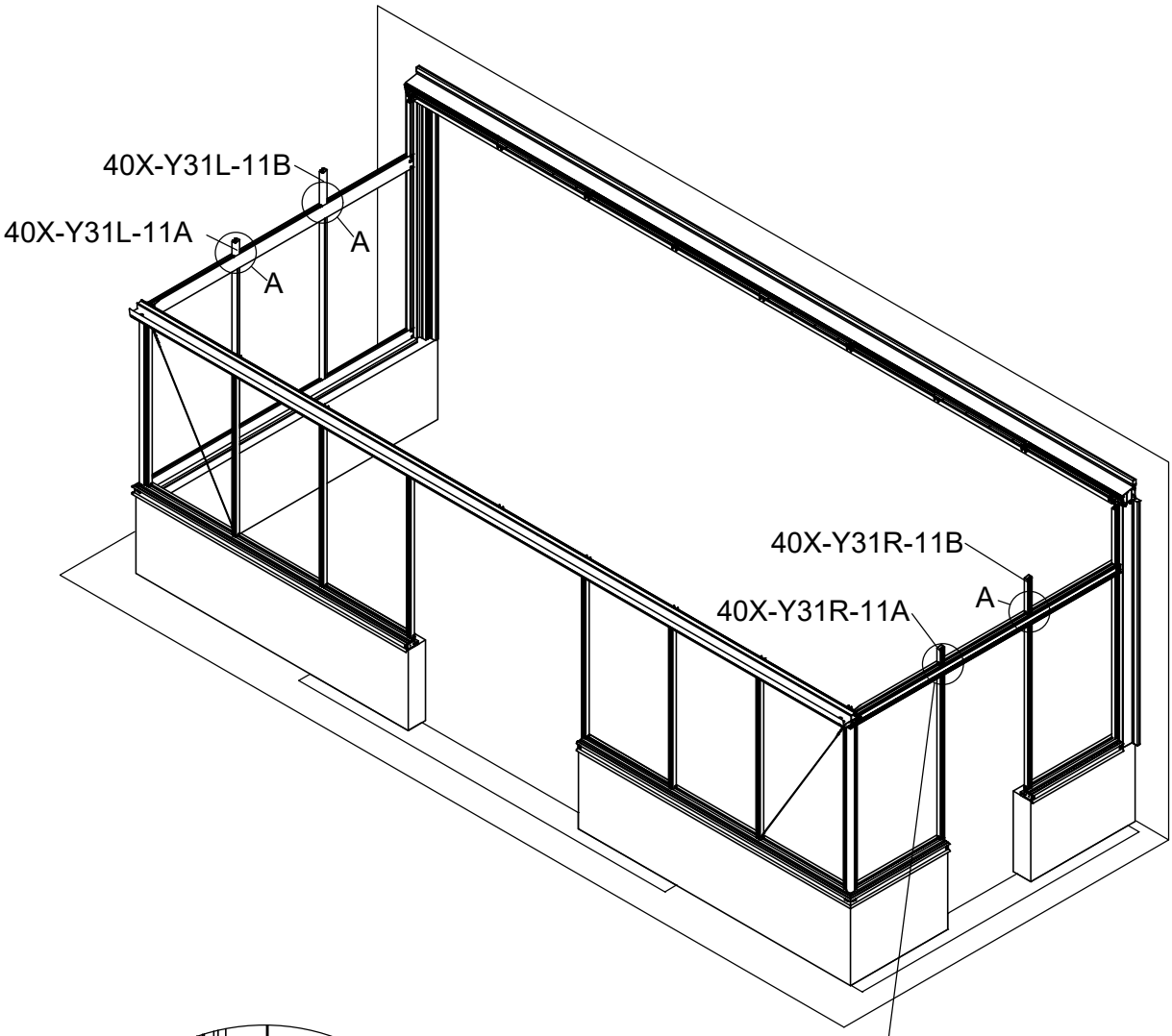

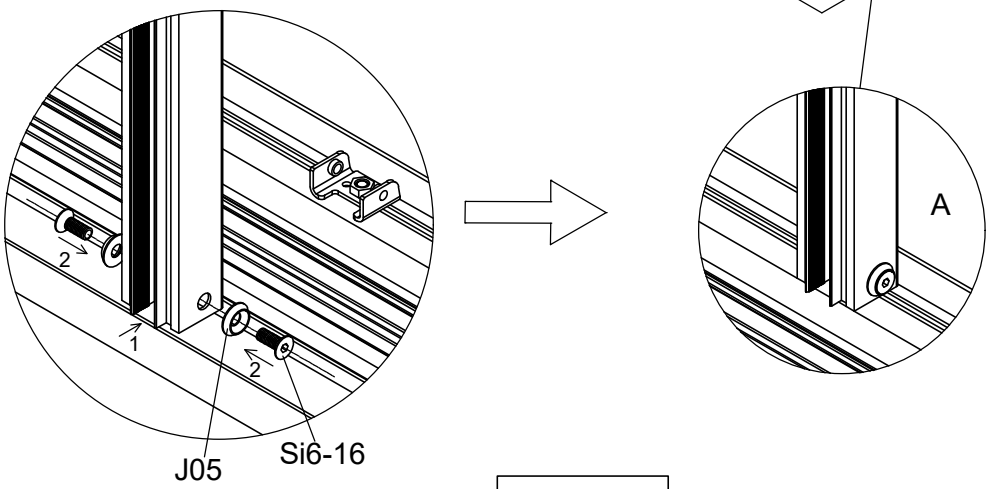

Part	NO.	QTY.	Length(MM)
	30L-Y21-11	1	2353
	30L-Y22-11	1	2353
	7B26-068	2	PCS
	Si8-25	4	PCS
	7B33-020	8	PCS
	Si8-16	4	PCS

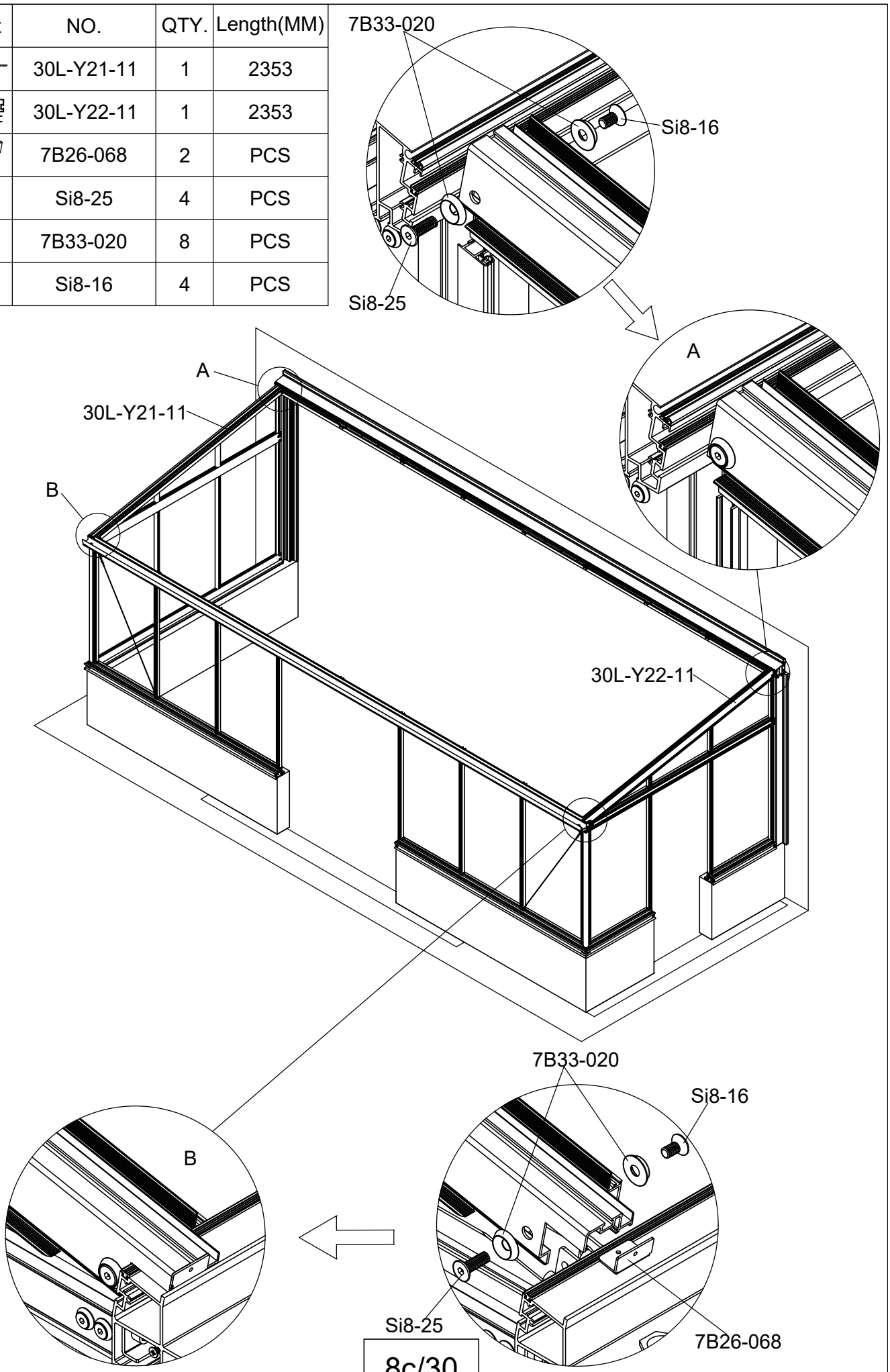

Part	NO.	QTY.	Length(MM)
	M6-8	8	PCS

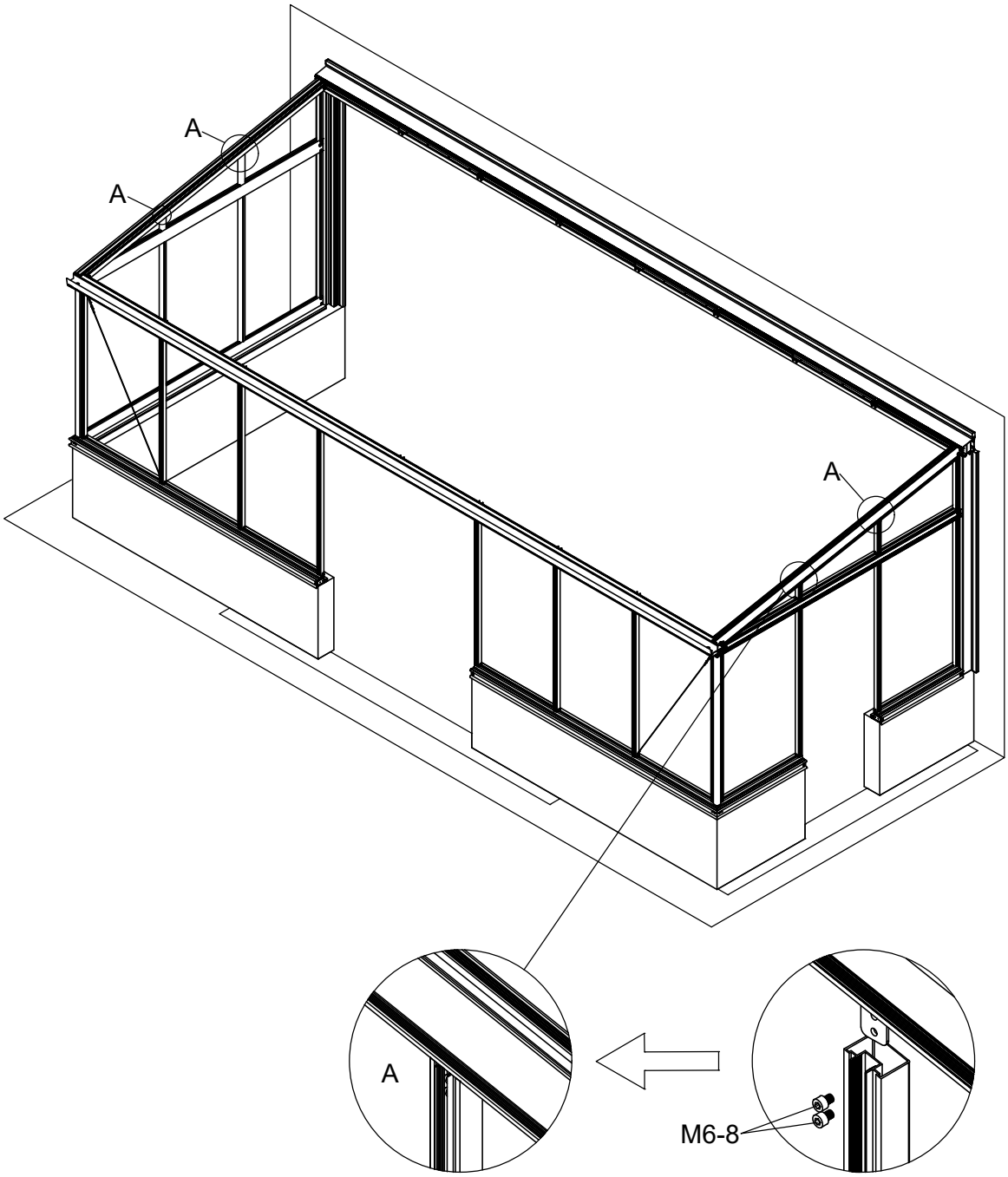

Part	NO.	QTY.					Length(MM)
		3172	3173	3174	3175	3176	
	30L-Y33R-11	1	2	2	3	3	2314
	30L-Y33L-11	1	2	2	3	3	2314
	40L-Y34A	1	2	2	3	3	713
	Si5-16	4	8	8	12	12	PCS
	7C28-004	4	8	8	12	12	PCS

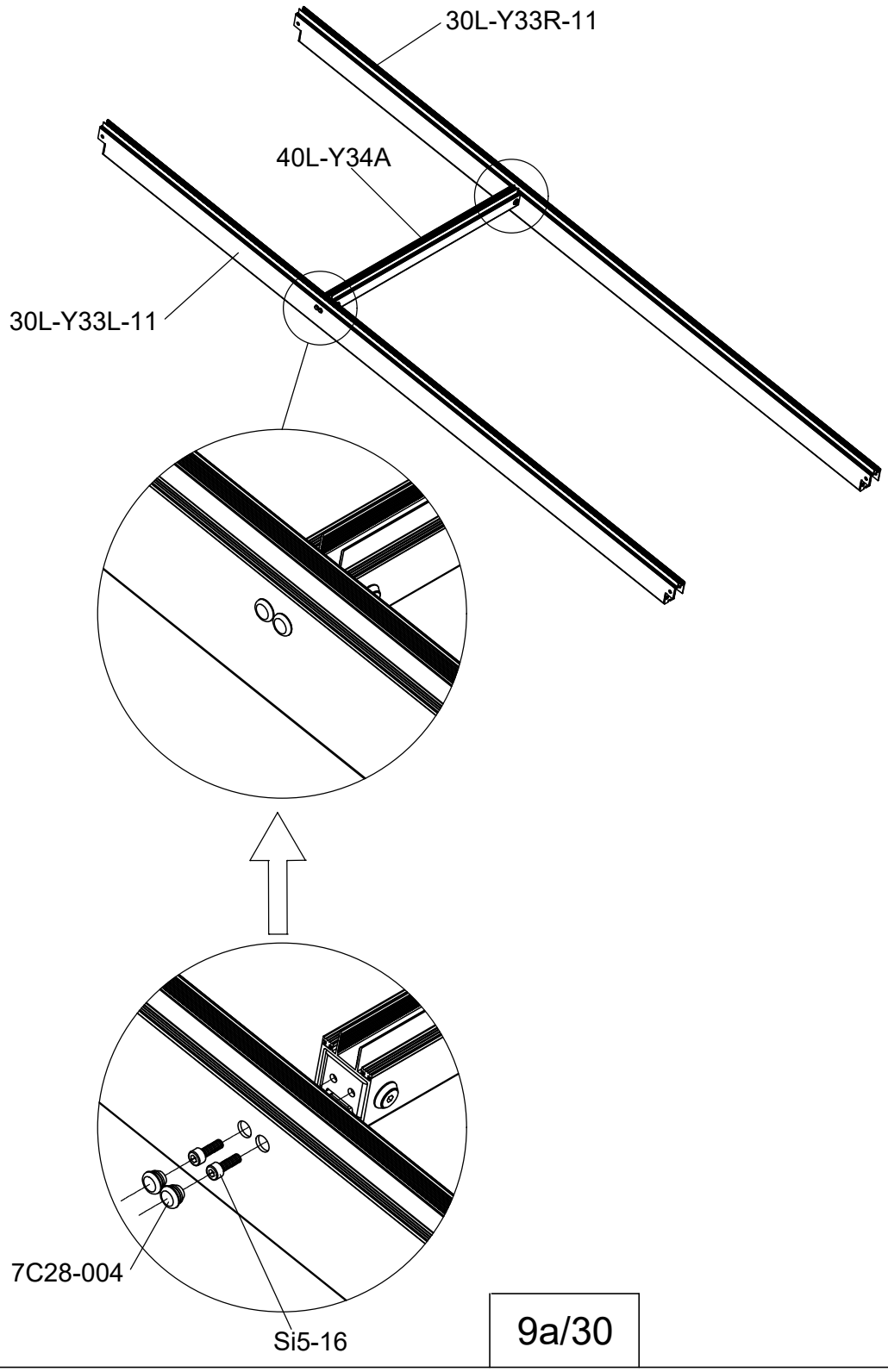

Part	NO.	QTY.					Length(MM)
		3172	3173	3174	3175	3176	
	30L-Y33A-11	1	0	1	0	1	2314

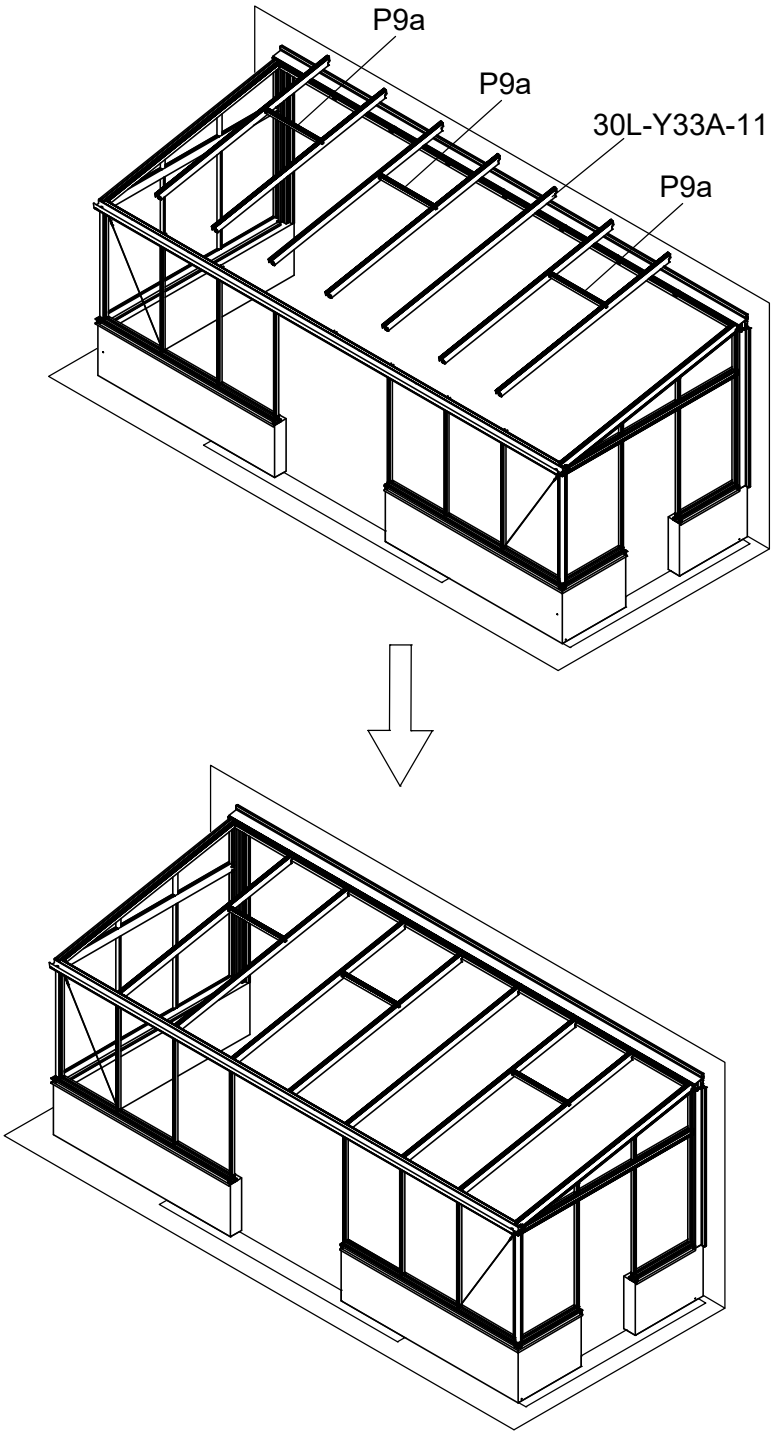

3172	3173	3174	3175	3176
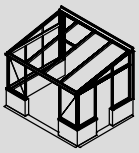	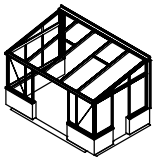	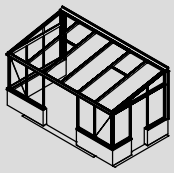	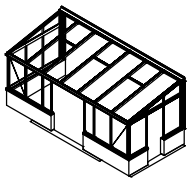	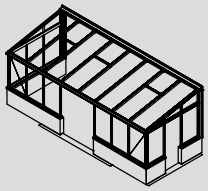

Part	NO.	QTY.					Length(MM)
		3172	3173	3174	3175	3176	
	Si6-16	12	16	20	24	28	PCS
	J05	12	16	20	24	28	PCS

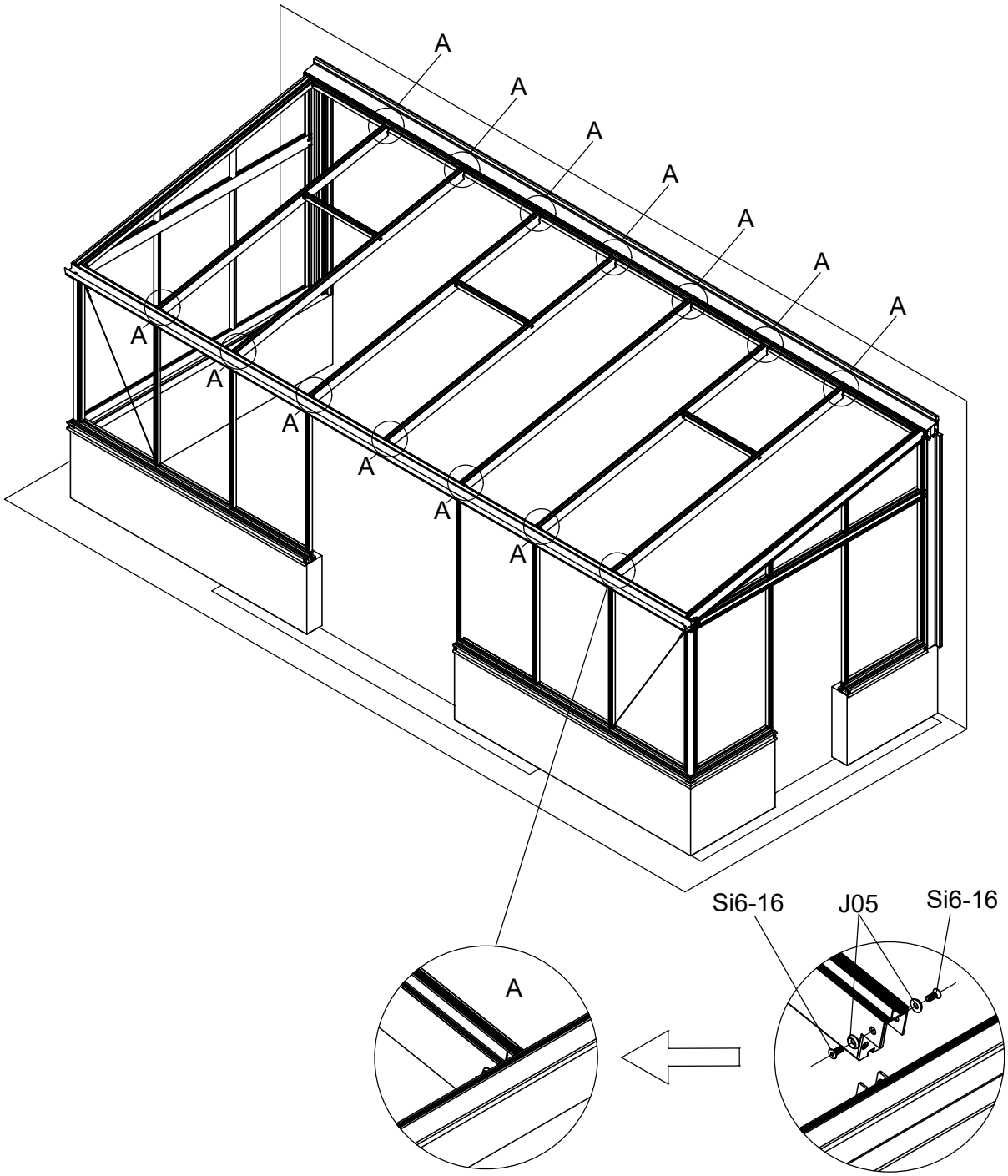

Part	NO.	QTY.					Length(MM)
		3172	3173	3174	3175	3176	
	730×1262	4	4	6	6	8	1262
	354×1262	0	2	0	2	0	1262

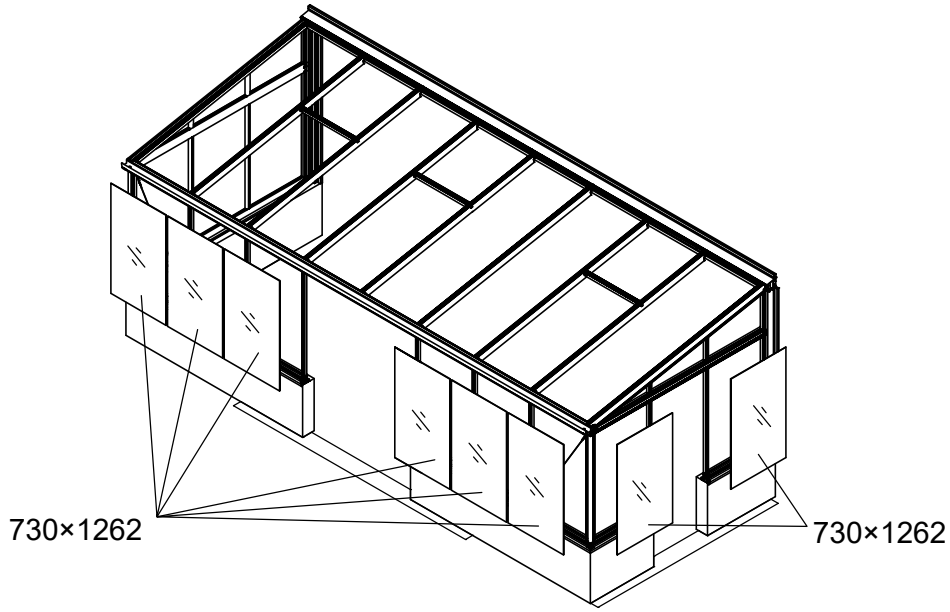

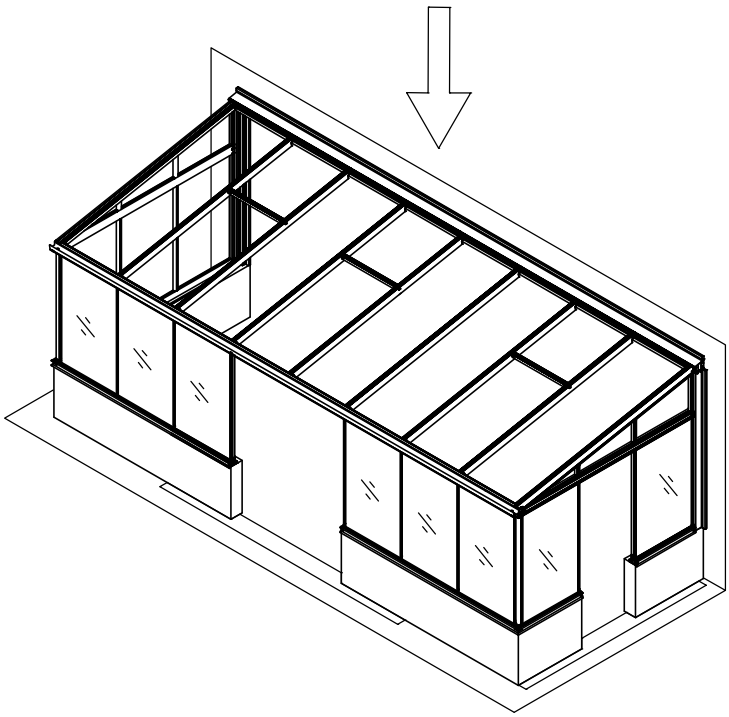

3172	3173	3174	3175	3176
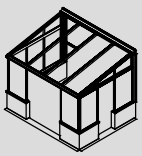	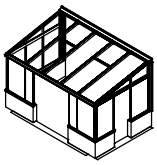	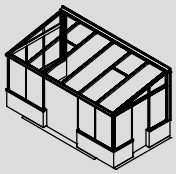	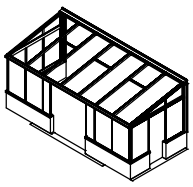	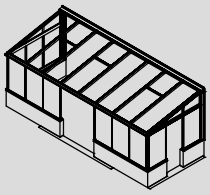

Part	NO.	QTY.	Length(MM)
	730×1262	3	1262

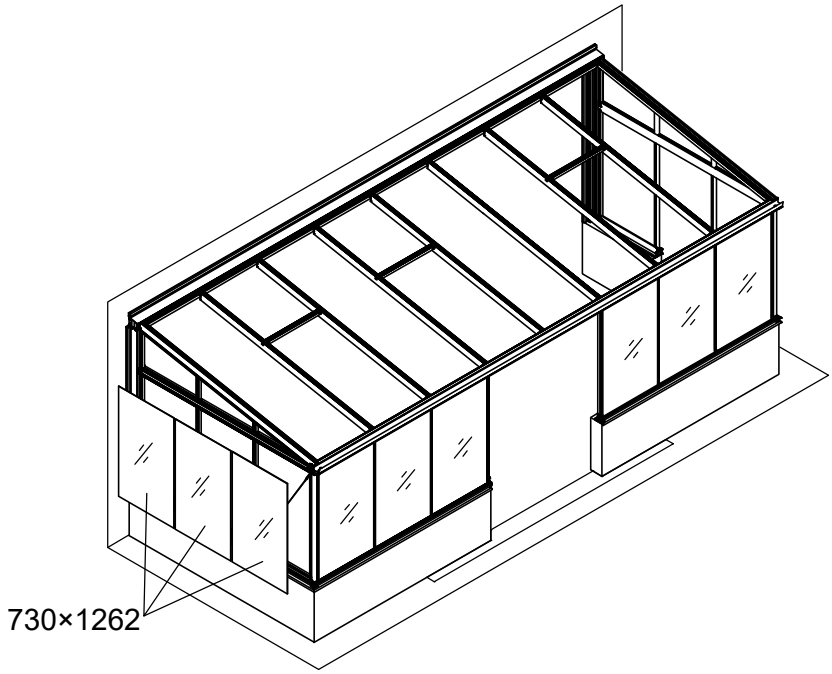

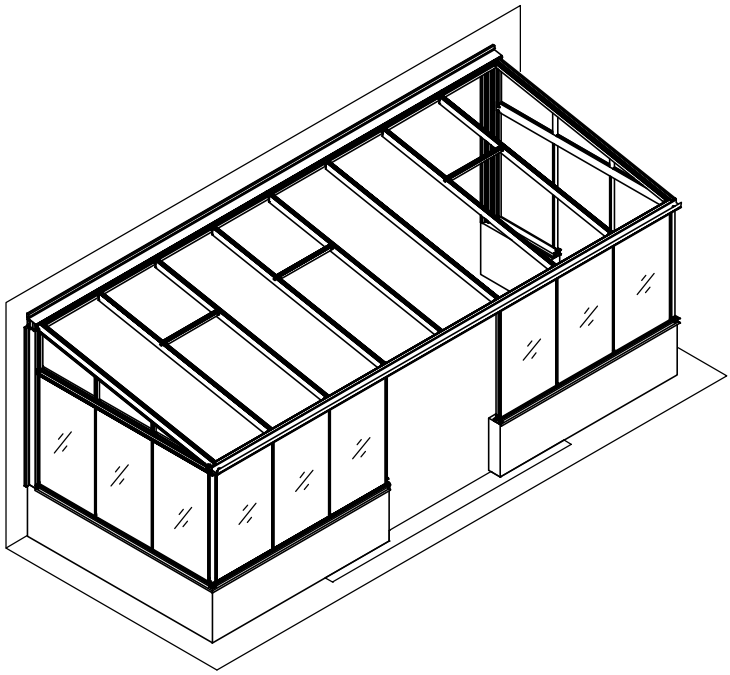

Part	Product	NO.	Length(MM)	QTY.	CTN NO.	Code
	3172	40A-Y15-R	842	1	3043PA-S-4	A013
	3173	50A-Y15-R	1218	1	3171P-S-5D	
	3174	40A-S15-6R	1593	1	3171P-S-6D	
	3175	40A-S15-7R	1969	1	3171P-S-7D	
	3176	40A-S15-8R	2344	1	3171P-S-8D	
	3172	40A-Y15-L	842	1	3043PA-S-4	A014
	3173	50A-Y15-L	1218	1	3171P-S-5D	
	3174	40A-S15-6L	1593	1	3171P-S-6D	
	3175	40A-S15-7L	1969	1	3171P-S-7D	
	3176	40A-S15-8L	2344	1	3171P-S-8D	

Part	NO.	Length(MM)	QTY.	CTN NO.
	40L-S15L-3	2335	1	3171P-S-3F
	40LA-Y15	779	1	3171P-S-4-REAR
	40A-Y15-L	842	1	3171P-S-4-REAR

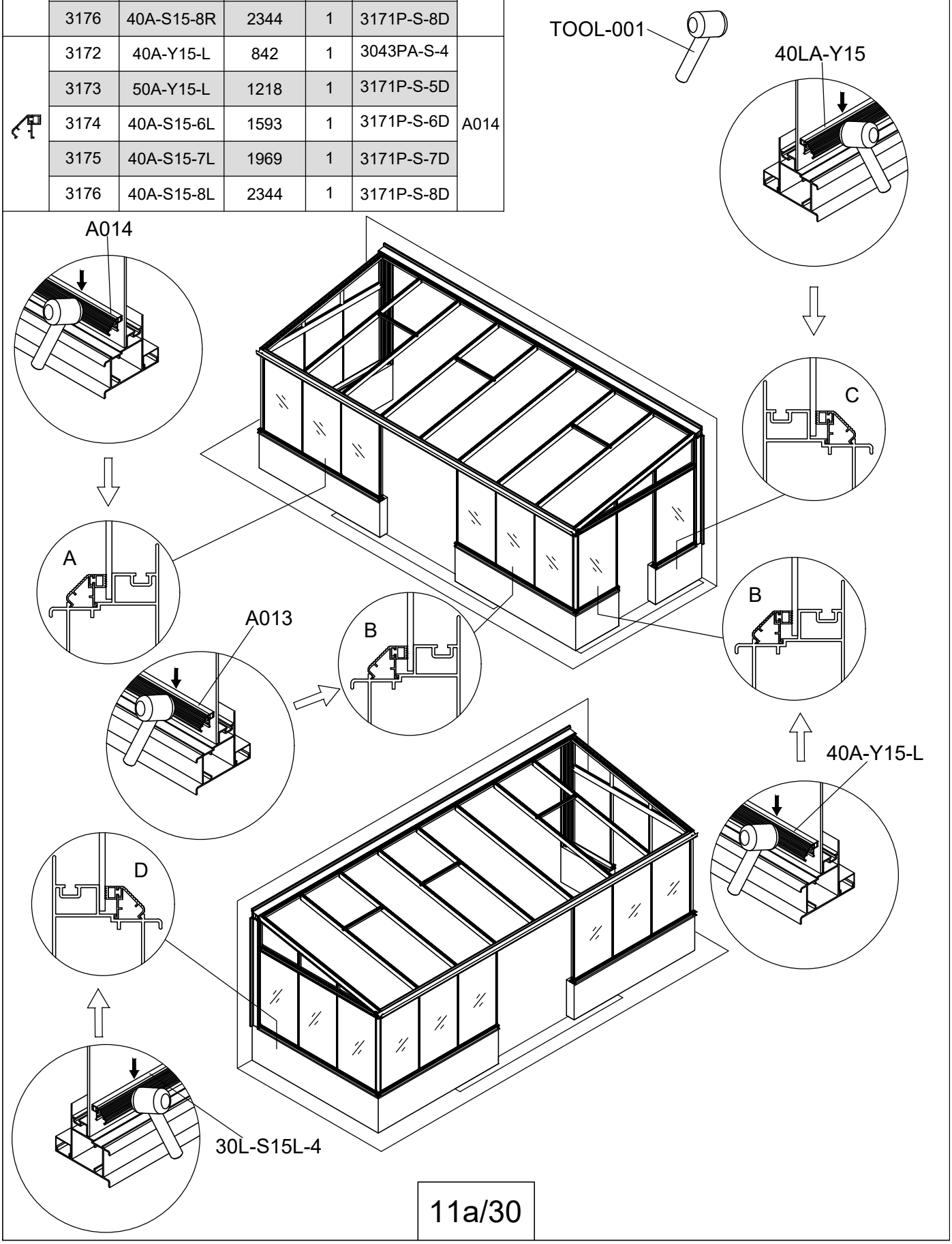

Part	NO.	QTY.					Length(MM)
		3172	3173	3174	3175	3176	
	40A-Y01	5	7	7	9	9	1235

Part	NO.	QTY.	Length(MM)
	40A-Y02	2	1235
	40LA-Y01	1	1235

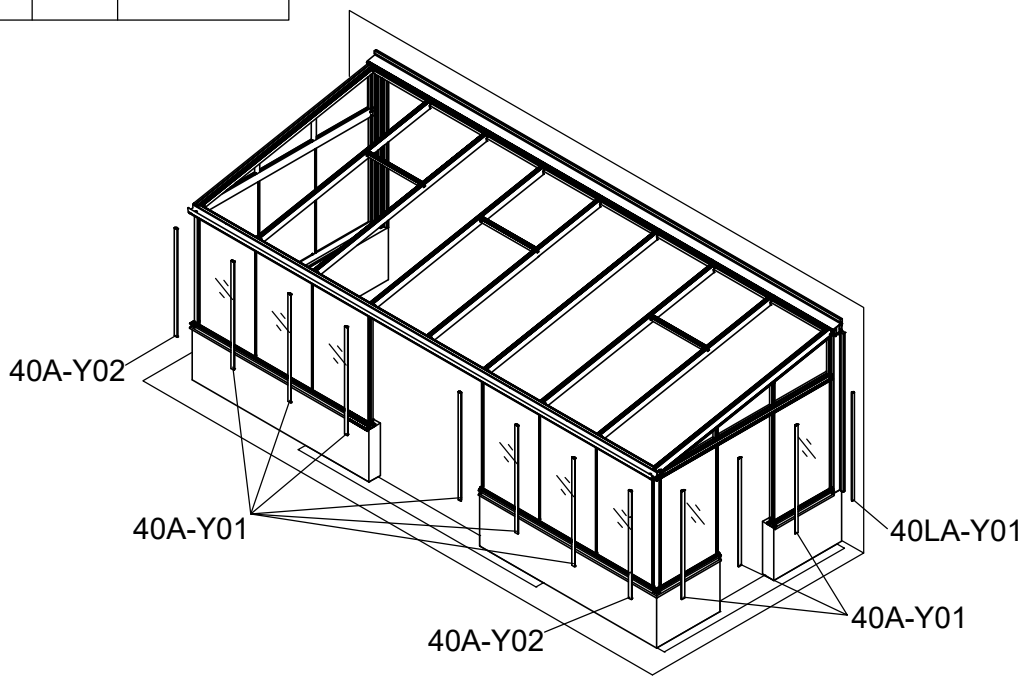

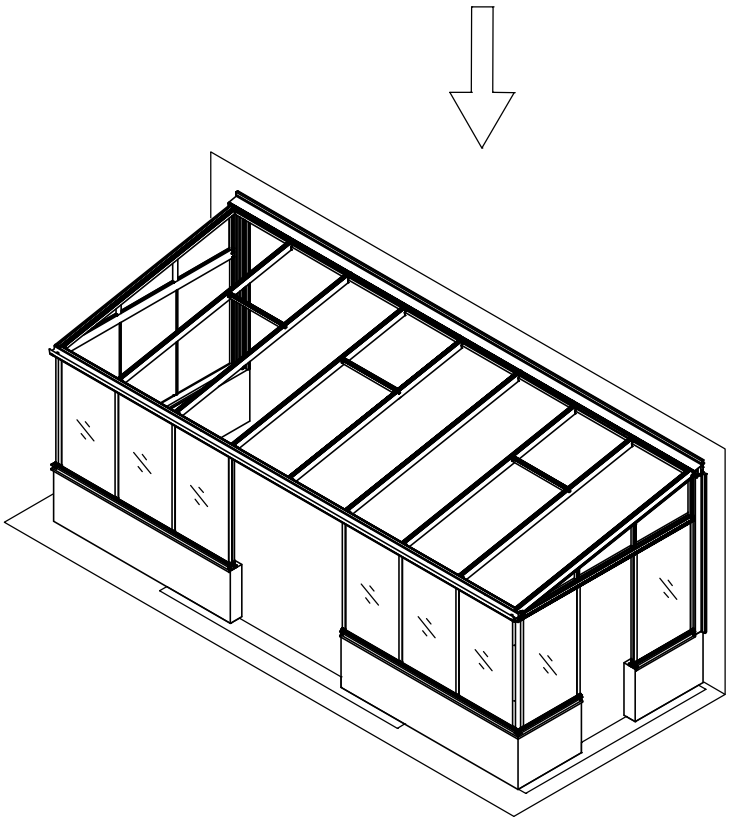

Part	NO.	QTY.	Length(MM)
	40A-Y01	3	1235
	40LA-Y01	1	1235

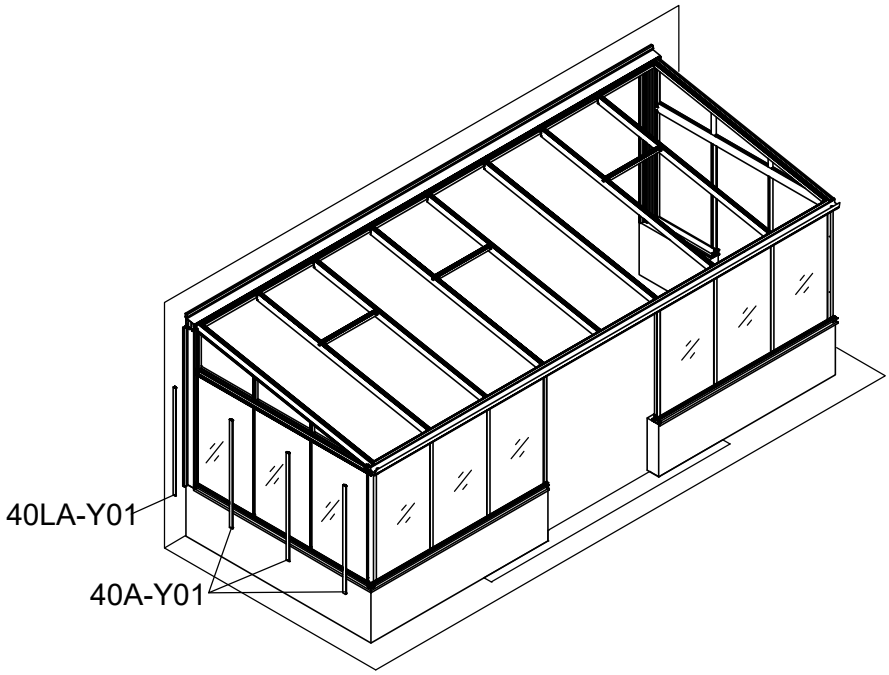

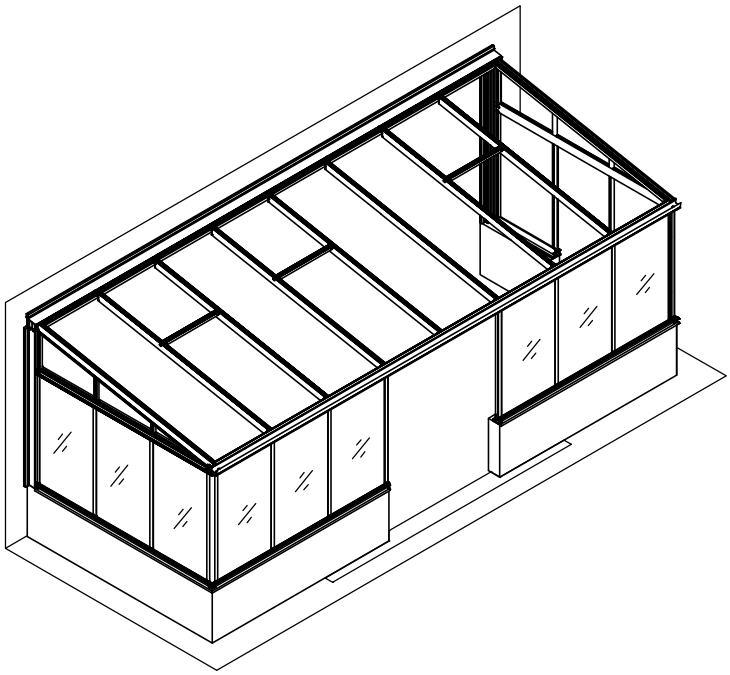

Part	NO.	QTY.					Length(MM)
		3172	3173	3174	3175	3176	
	7C26-007N	7.3M	8M	8.8M	9.5M	10.3M	

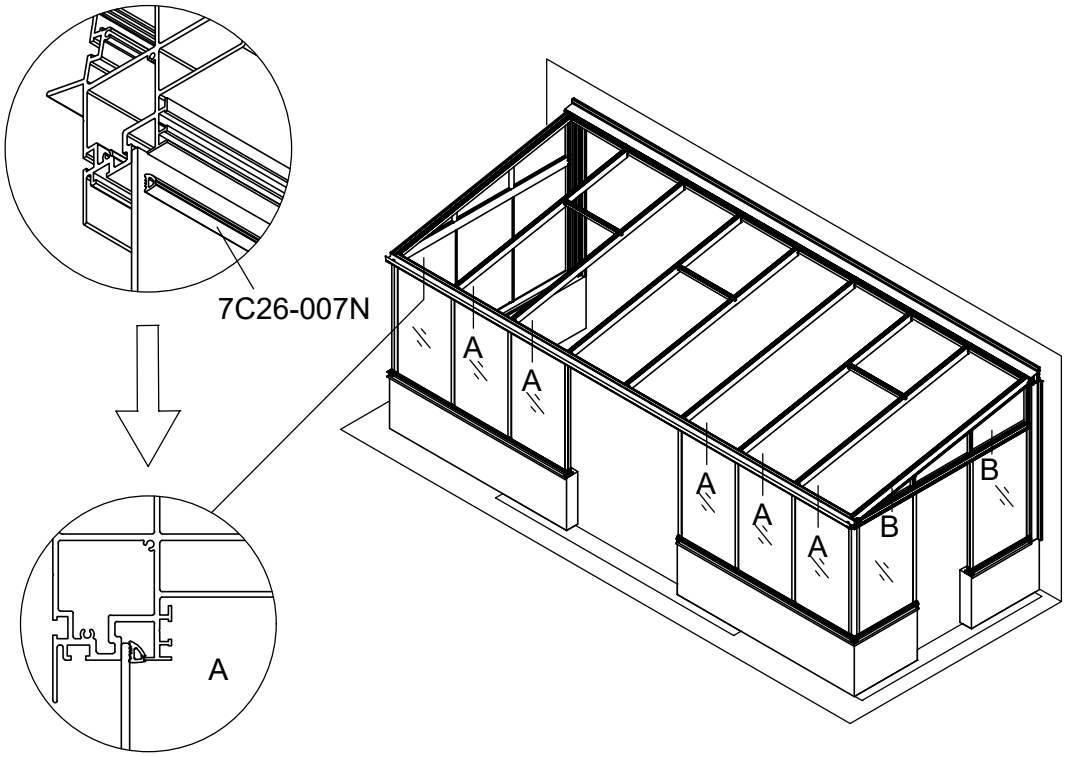

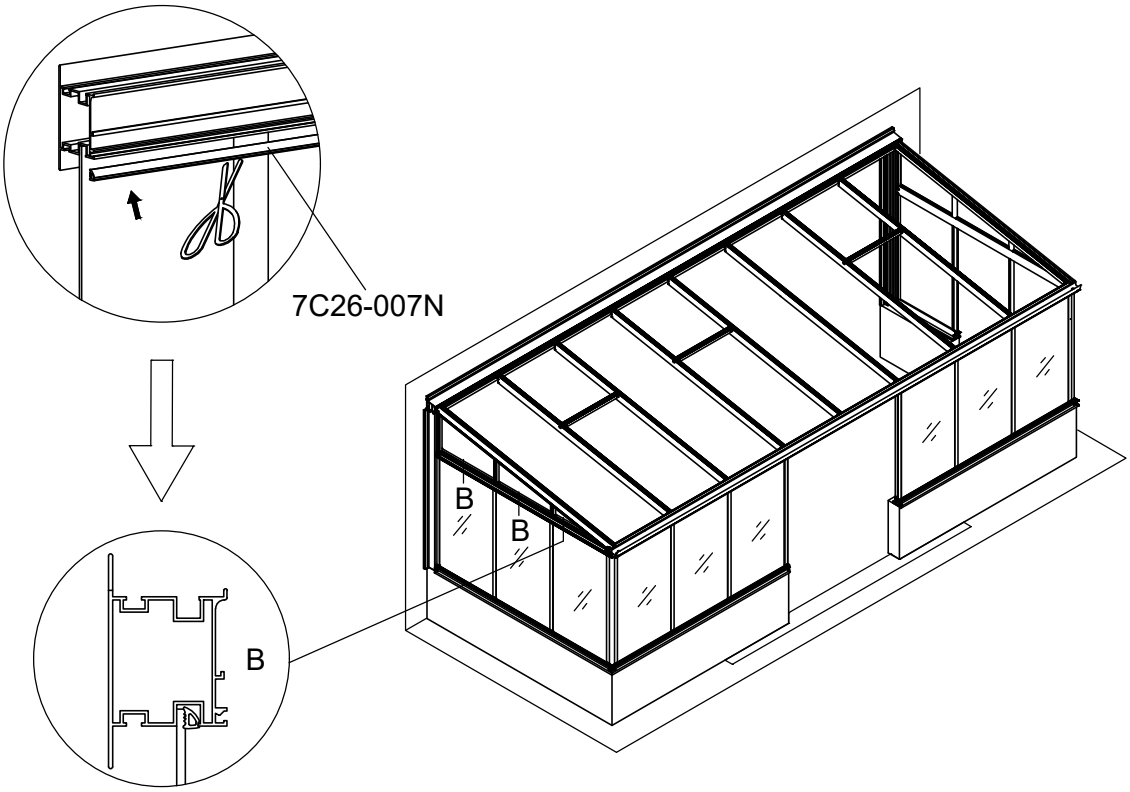

Part	NO.	QTY.	Length(MM)
	620×134	1	620
	730×280	1	730
	730×426	1	730

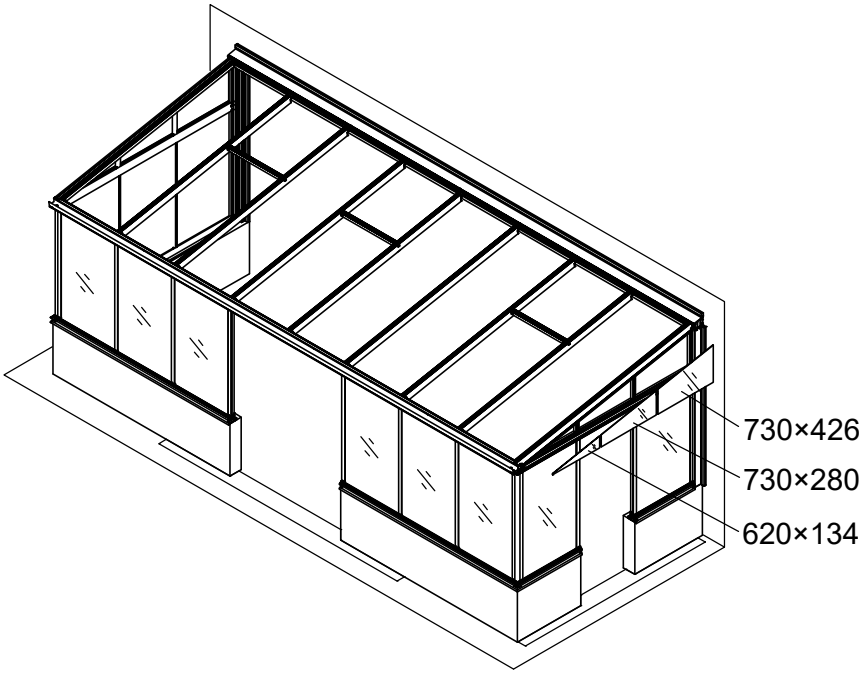

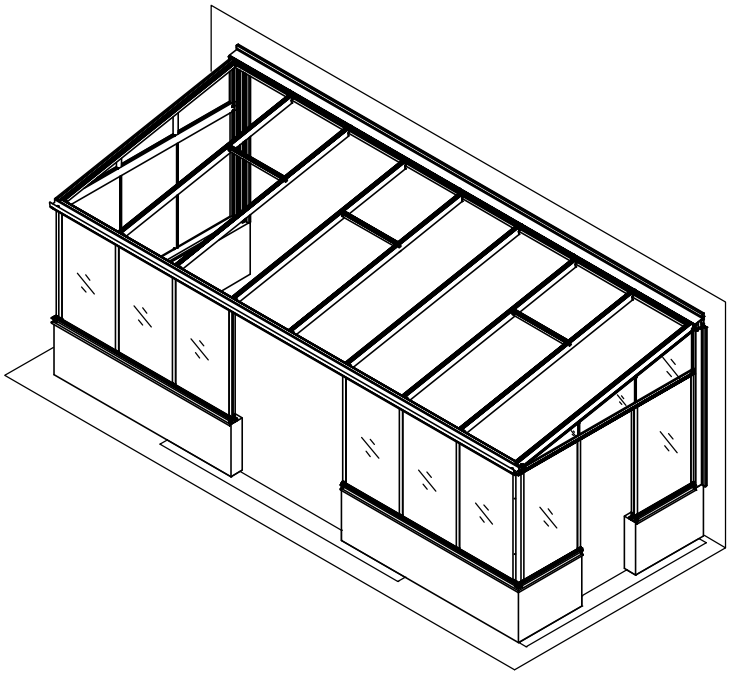

Part	NO.	QTY.	Length(MM)
	30L-Y05R-11	1	2315
	40X-Y04R-11B	1	270
	40X-Y04R-11A	1	124
	30L-Y04R-11	1	414

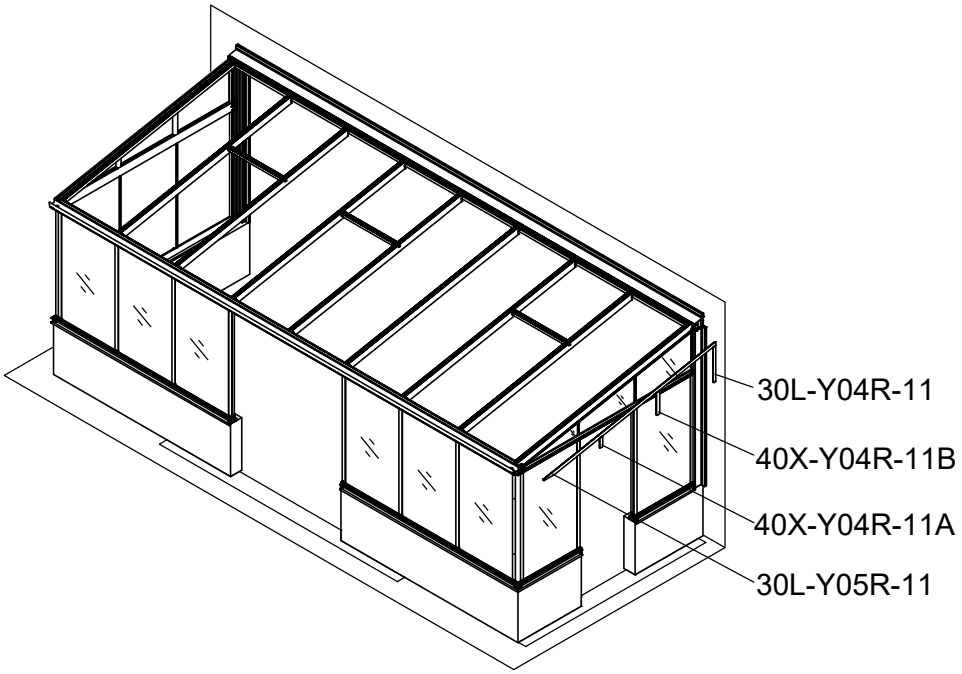

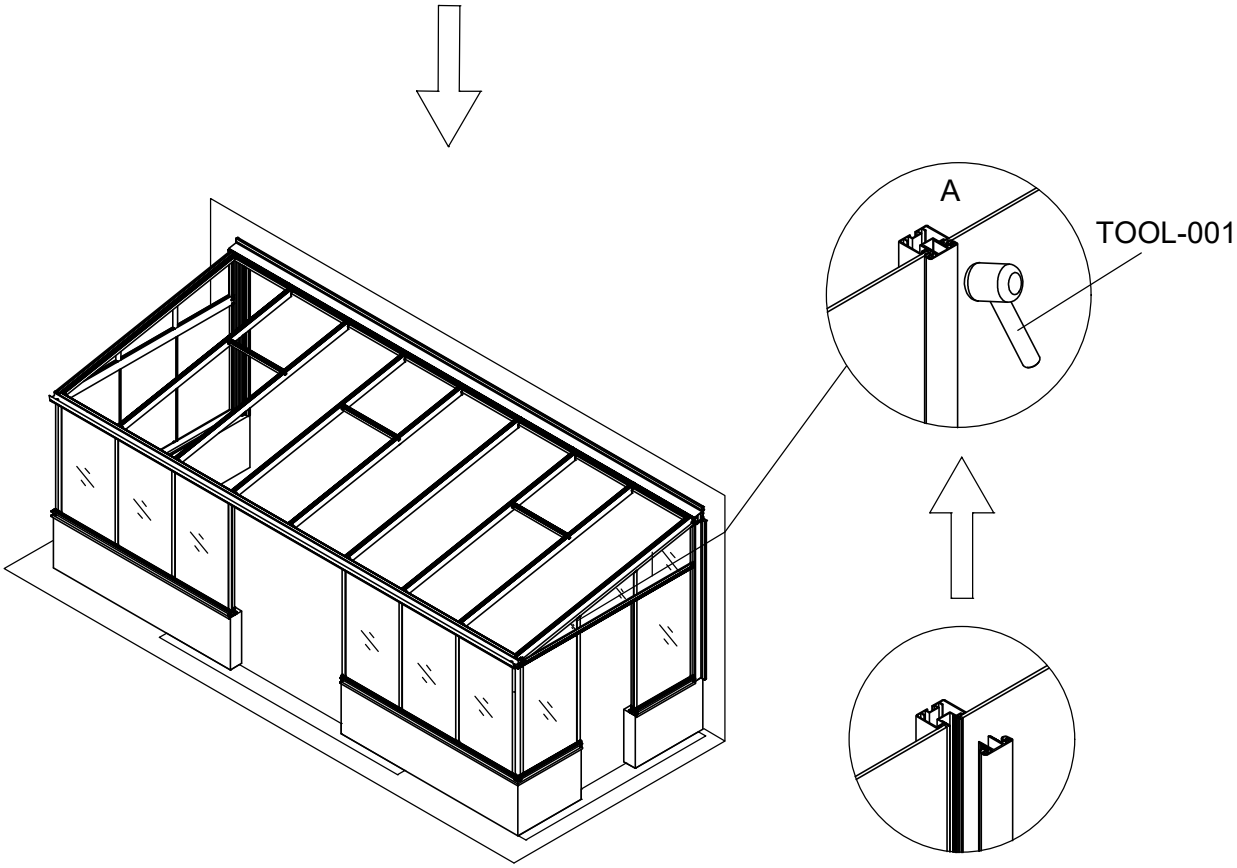

Part	NO.	QTY.	Length(MM)
	620×134	1	620
	730×280	1	730
	730×426	1	730

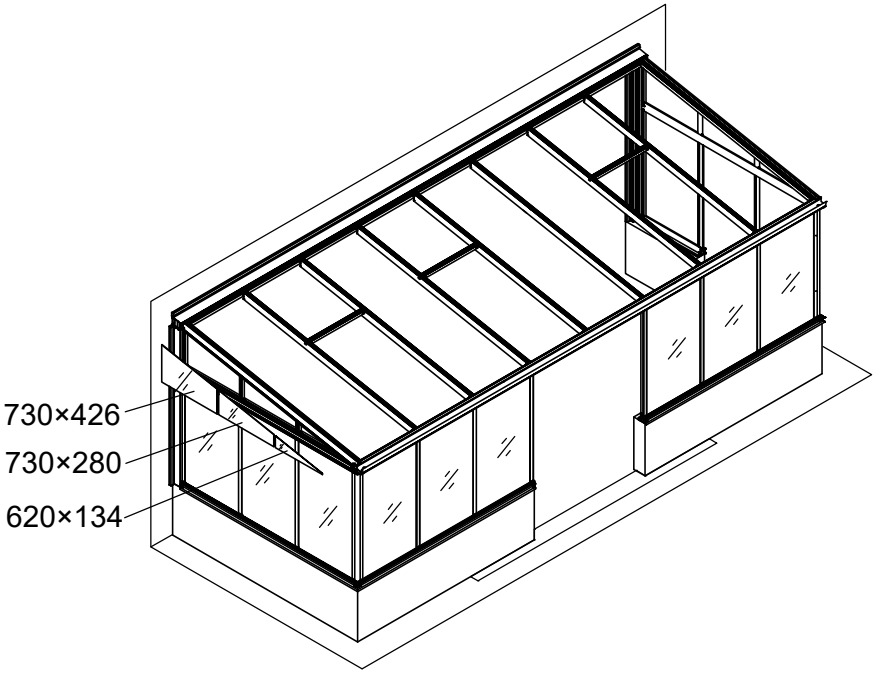

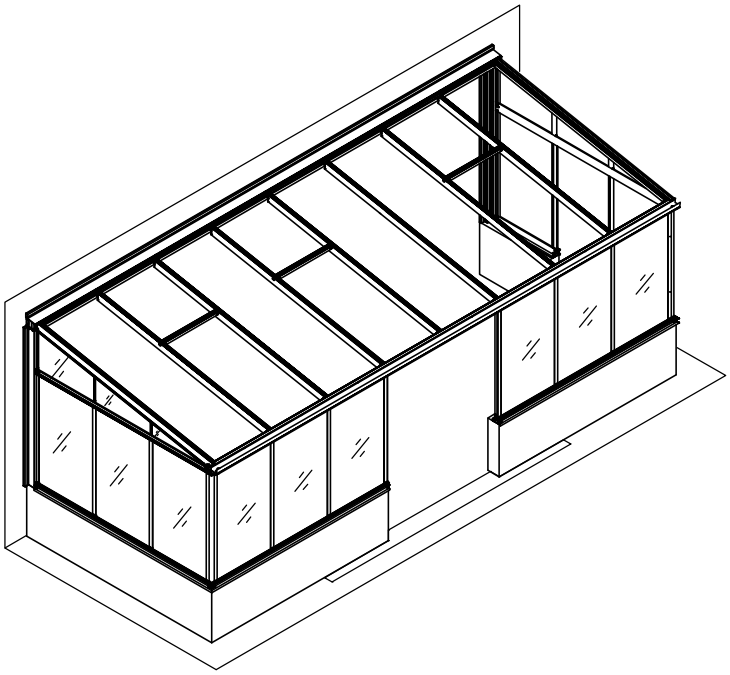

Part	NO.	QTY.	Length(MM)
	30L-Y05L-11	1	2315
	40X-Y04L-11B	1	270
	40X-Y04L-11A	1	124
	30L-Y04L-11	1	414

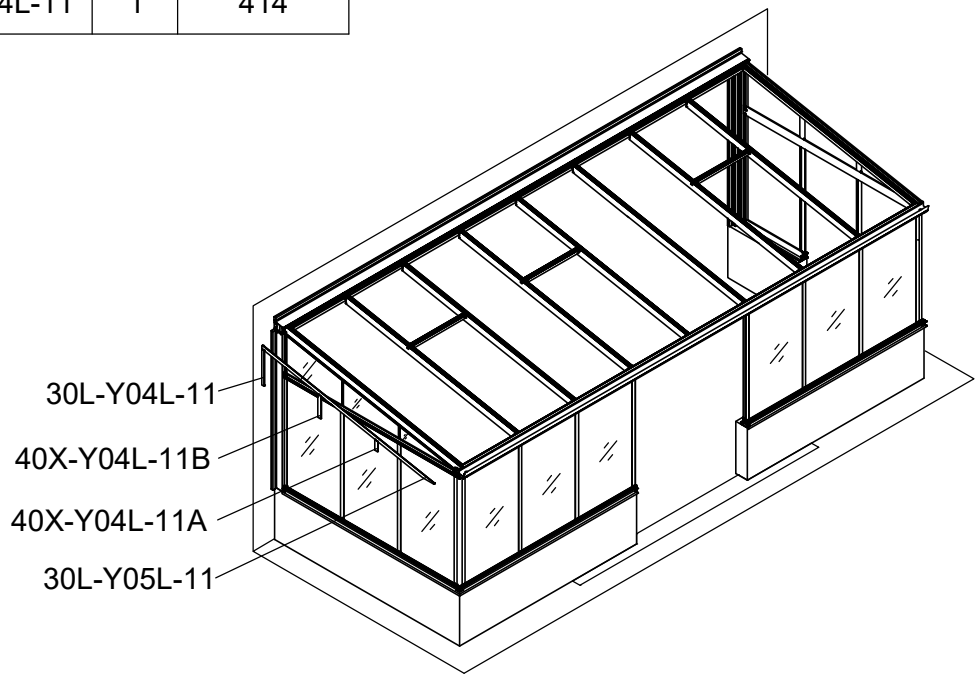

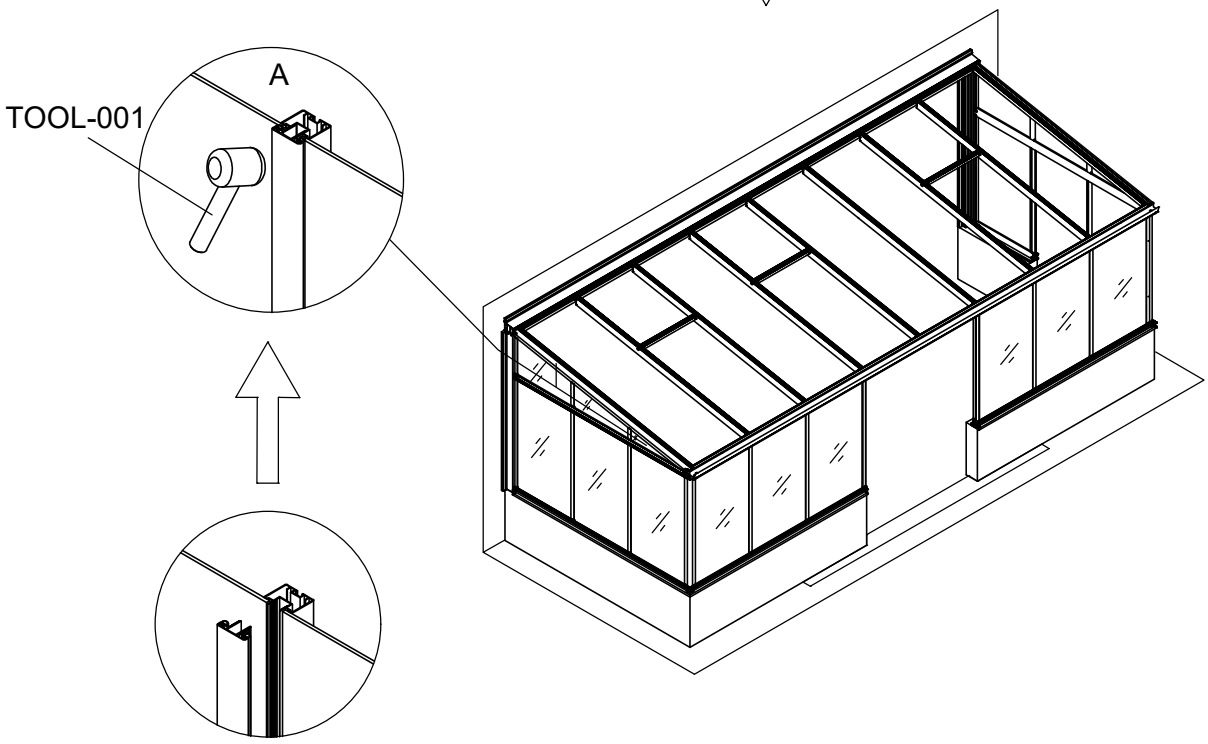

Part	NO.	QTY.					Length(MM)
		3172	3173	3174	3175	3176	
	729×2366	3	3	4	4	5	2366
	729×1485	1	2	2	3	3	1485

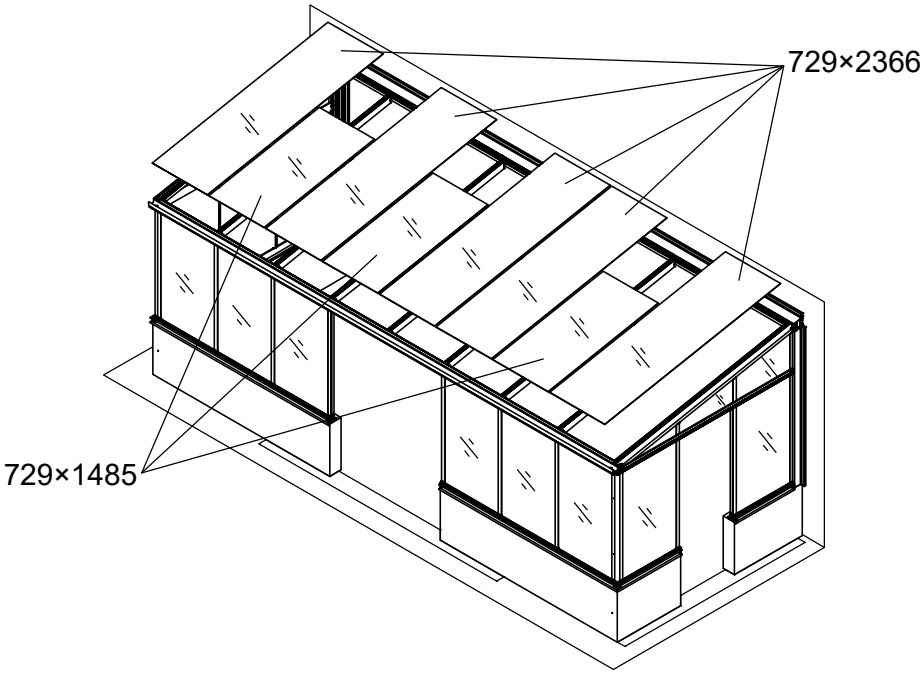

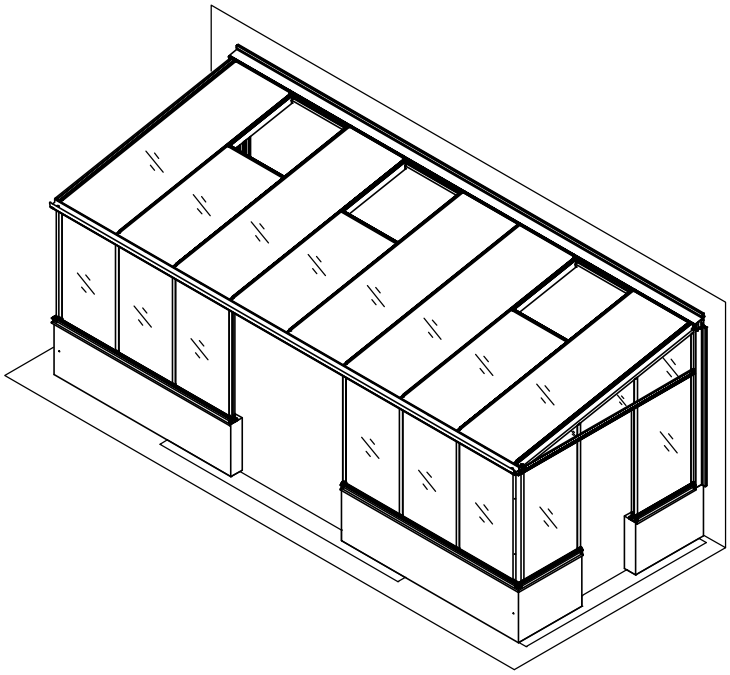

Part	NO.	QTY.					Length(MM)
		3172	3173	3174	3175	3176	
	30L-Y06-11	5	6	7	8	9	2353
	40L-Y07	1	2	2	3	3	713
	7B26-069	5	6	7	8	9	PCS

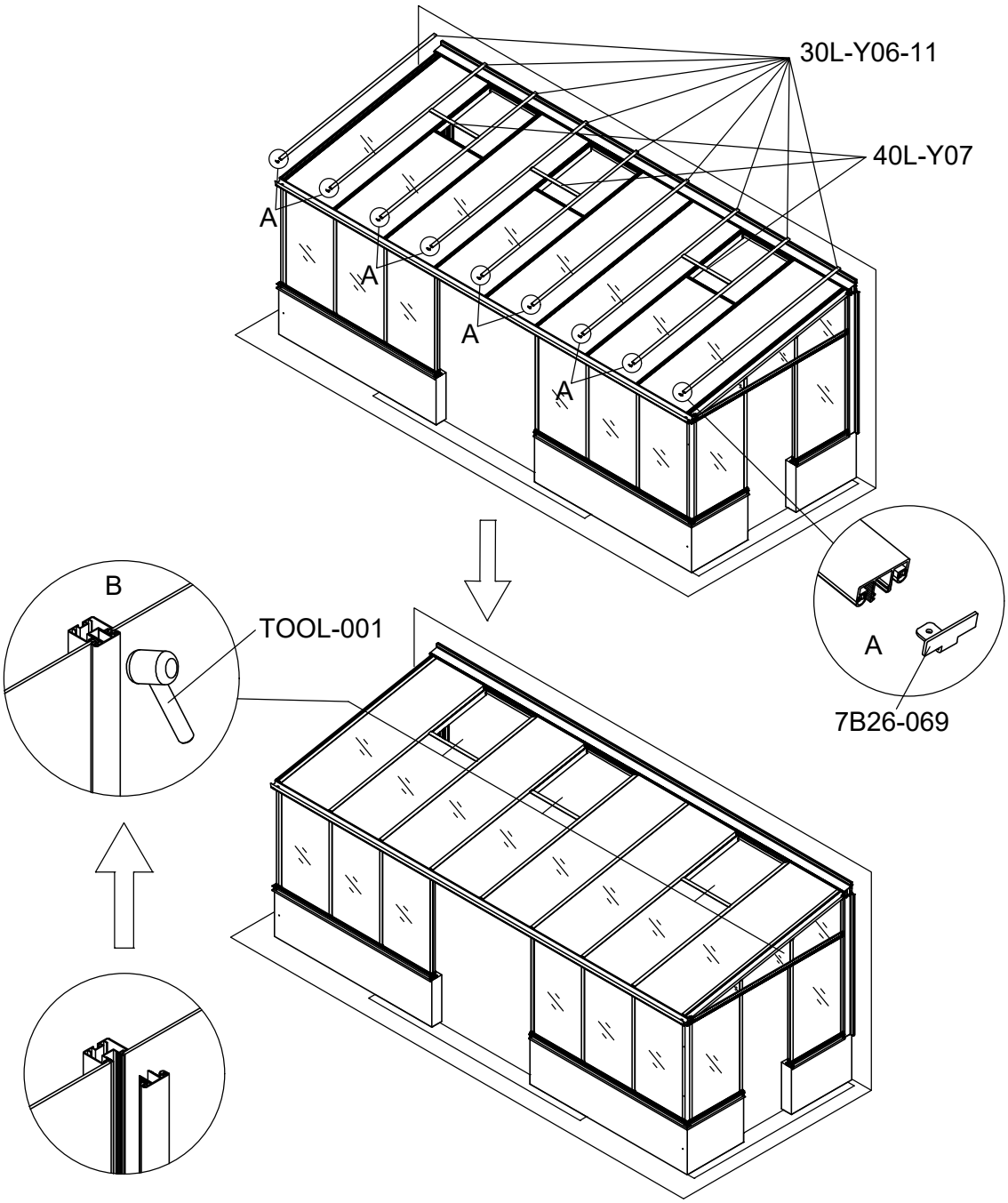

3172	3173	3174	3175	3176
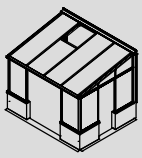	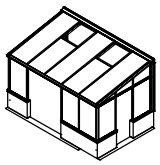	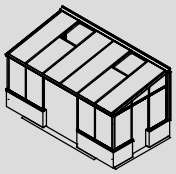	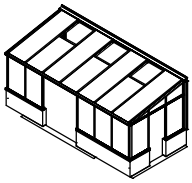	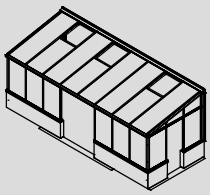

Part	NO.	QTY.					Length(MM)
		3172	3173	3174	3175	3176	
	7C26-038	3M	3M	3.8M	3.8M	4.5M	

Part	NO.	QTY.	Length(MM)
	7C26-007N	5M	

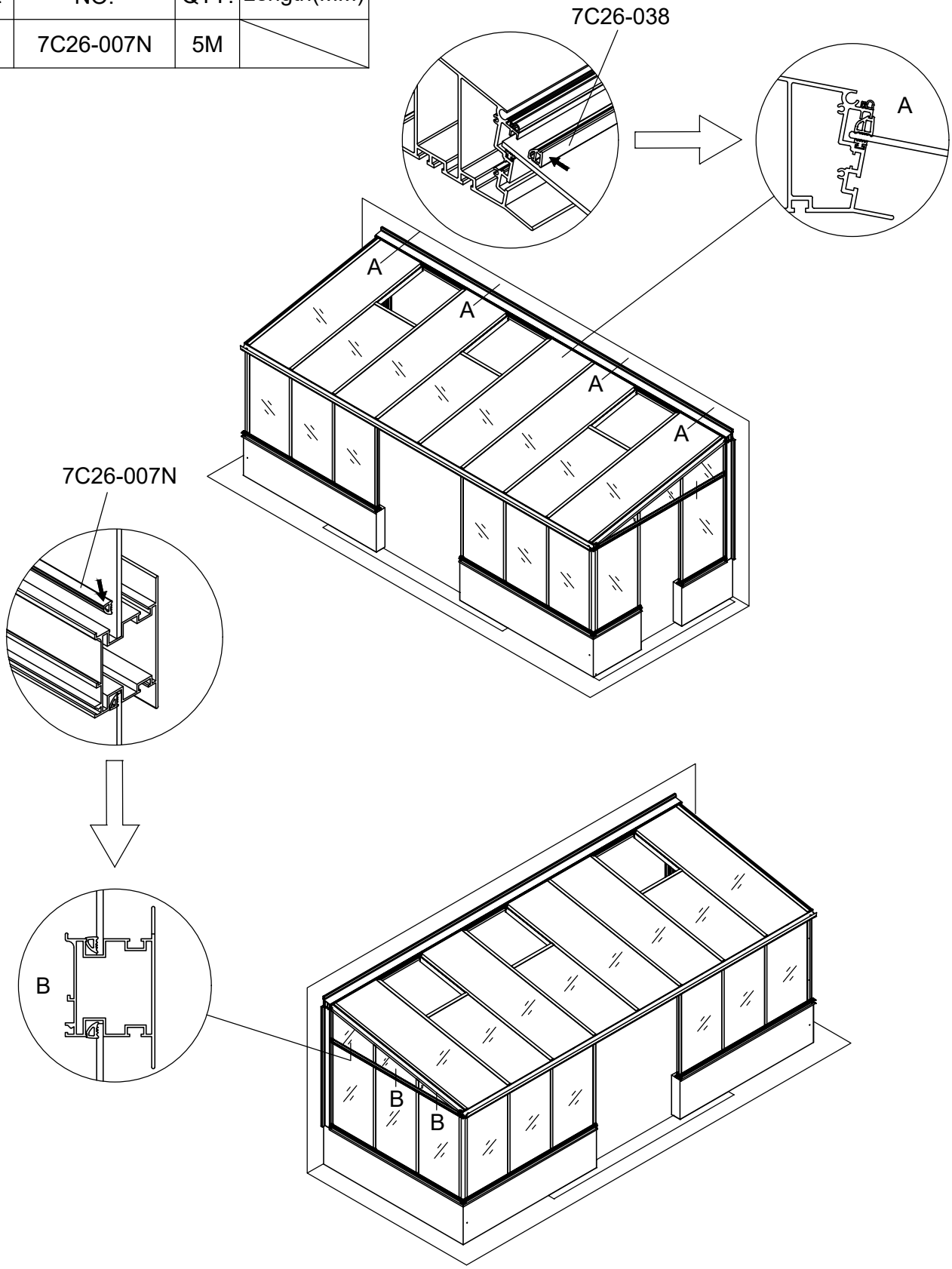

Part	NO.	QTY.	Length(MM)
	J08	1	PCS

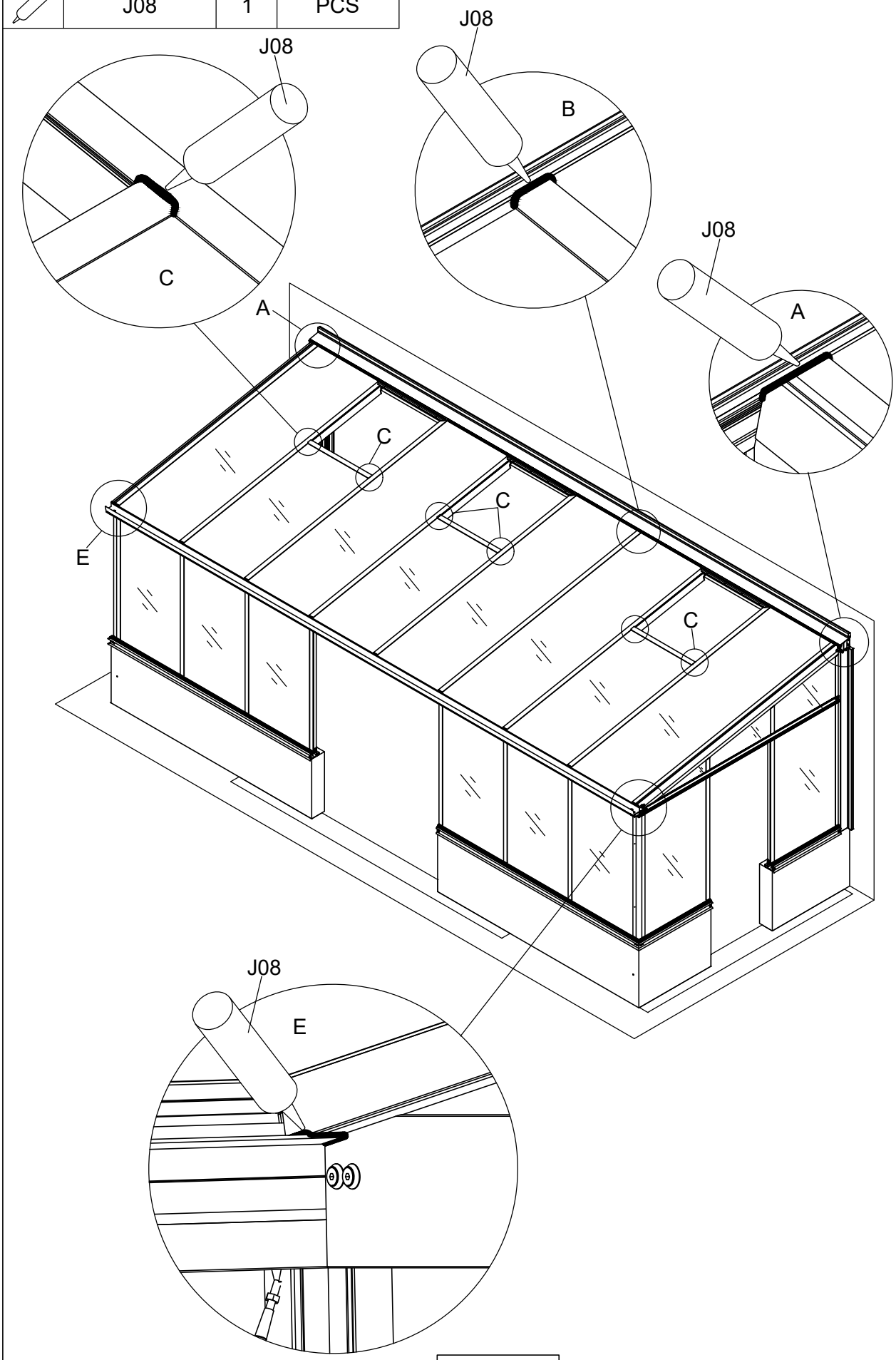

Part	Product	NO.	Length(MM)	QTY.	CTN NO.	Code
	3173	40L-Y62A-5B	431	2	3171P-S-5D	A015
	3174	40L-Y62A-6B	807	2	3171P-S-6D	
	3175	40L-Y62A-7B	1182	2	3171P-S-7D	
	3176	40L-Y62A-8B	1558	2	3171P-S-8D	

Part	NO.	Length(MM)	QTY.	CTN NO.
	30X-Y60-AN	2272	1	3171P-S-3F

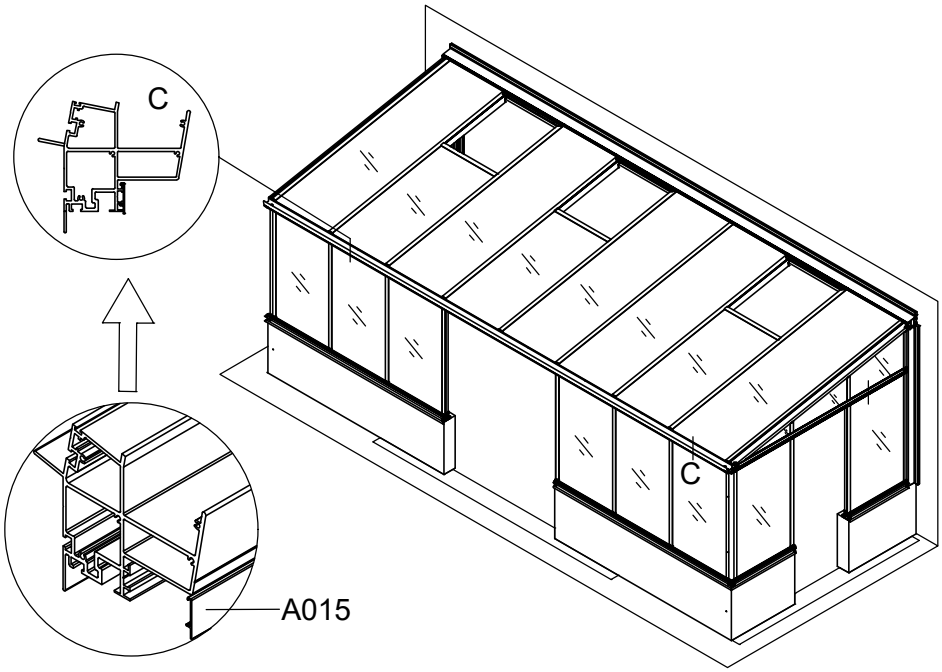

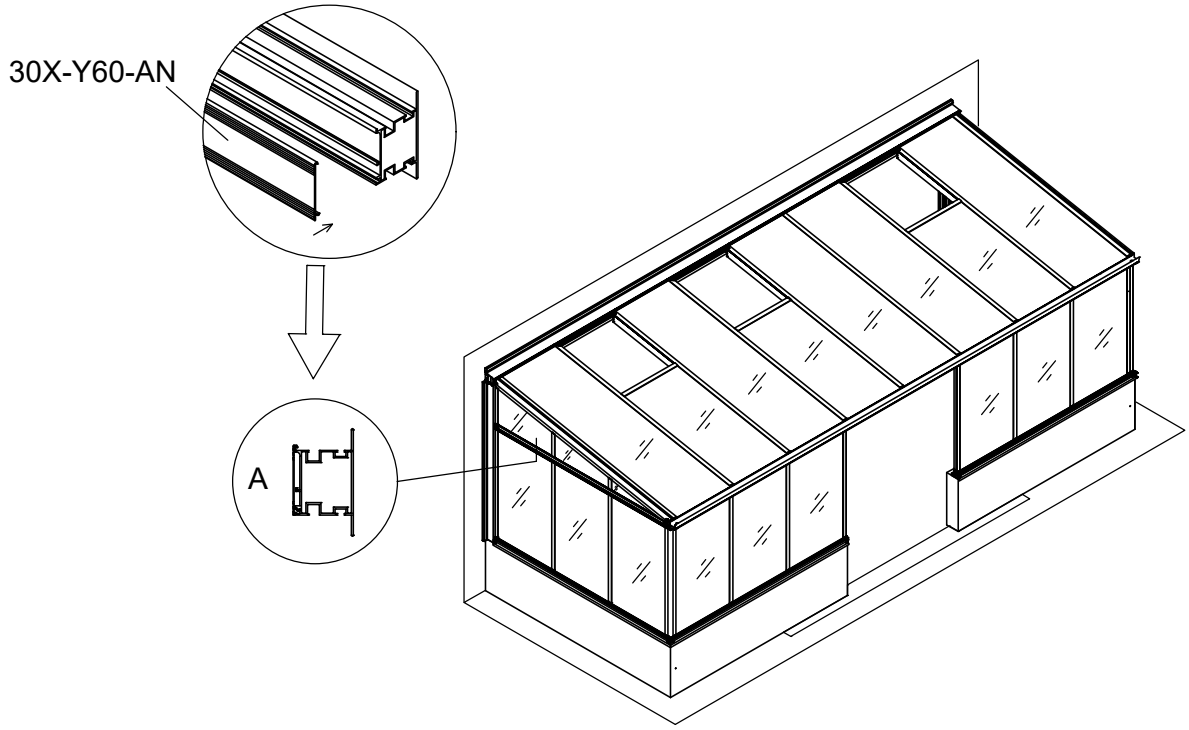

Part	NO.	QTY.	Length(MM)	CTN NO.
	40A-Y90	2	1866	3040P-D
	40A-Y91R	1	1866	3040P-D
	40A-Y91L	1	1866	3040P-D
	40A-Y92R	1	769	3040P-D
	40A-Y92L	1	769	3040P-D
	40A-Y93	2	769	3040P-D
	W03	8	30	3040P-D
	W04	16	PCS	3040P-D

Part	NO.	QTY.	Length(MM)	CTN NO.
	40A-Y90	1	1866	3040P-E
	40A-Y91R	1	1866	3040P-E
	40A-Y92R	1	769	3040P-E
	40A-Y93	1	769	3040P-E
	W03	4	30	3040P-E
	W04	8	PCS	3040P-E

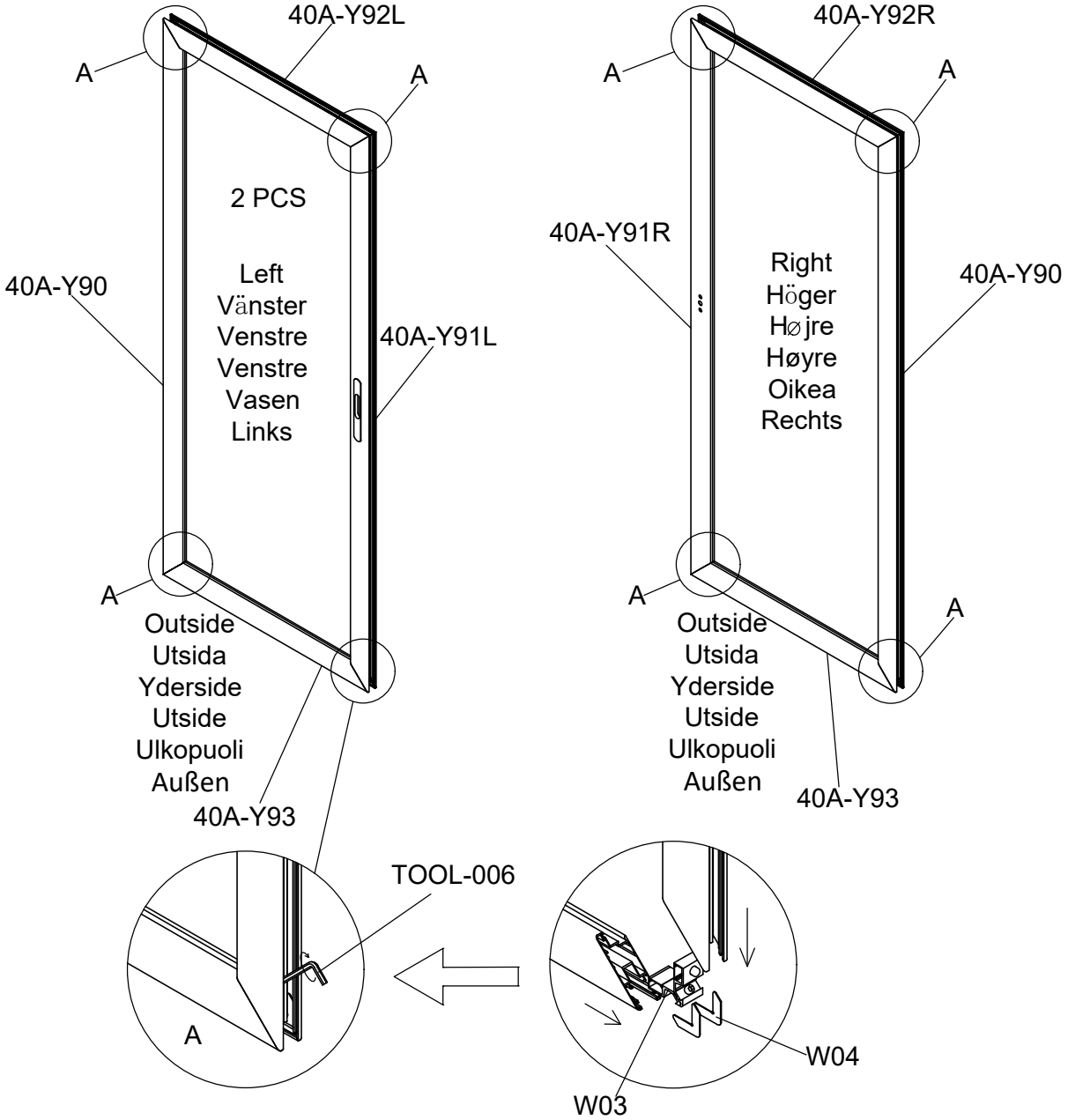

Part	NO.	QTY.	Length(MM)	CTN NO.
	40A-Y95	2	1765	3040P-D
	40A-Y96	2	668	3040P-D

Part	NO.	QTY.	Length(MM)	CTN NO.
	40A-Y95	2	1765	3040P-E
	40A-Y96	2	668	3040P-E

Part	NO.	QTY.	Length(MM)
	659×1756	2	1756

2 PCS

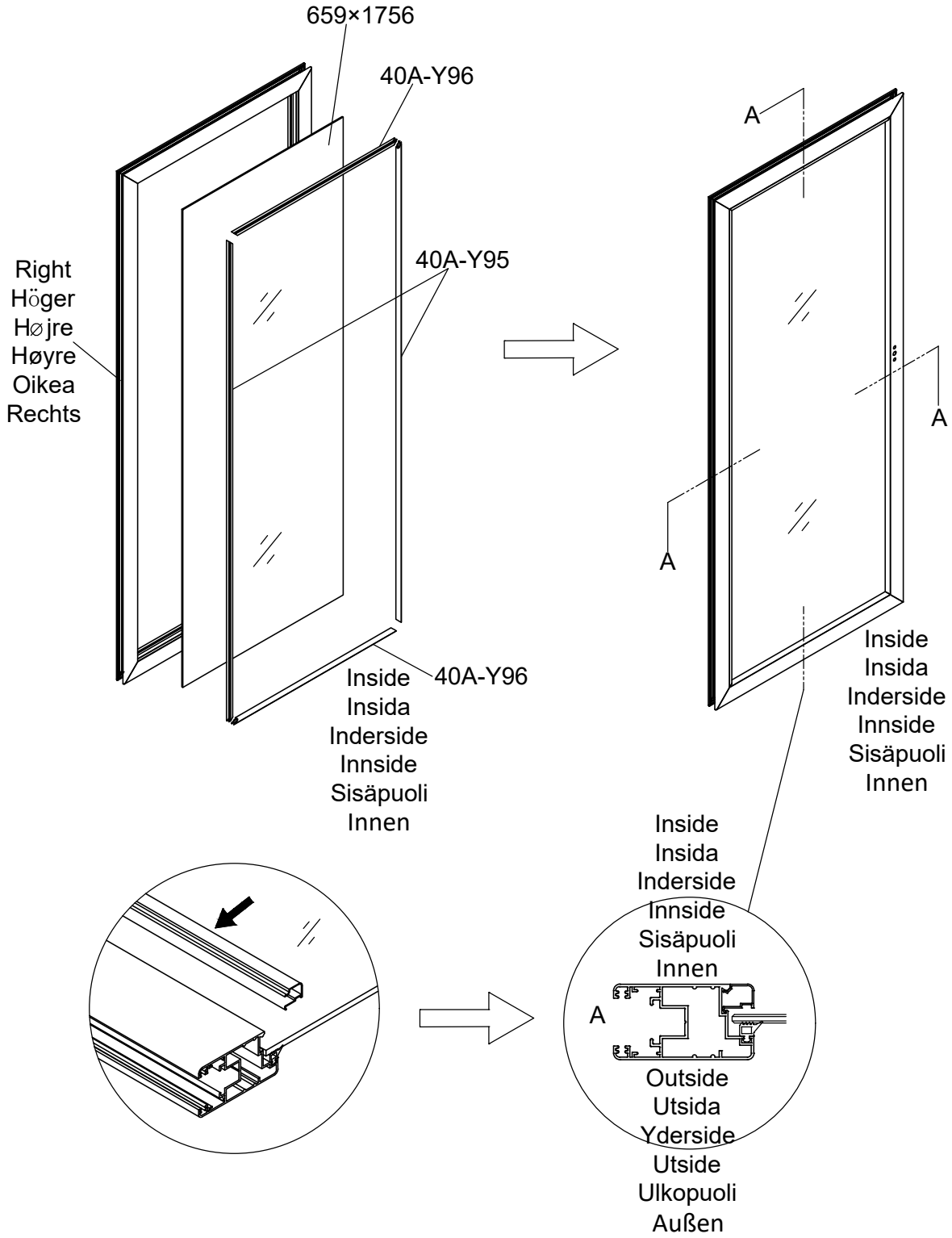

Part	NO.	QTY.	Length(MM)	CTN NO.
	659×1756	1	1756	3040P-D
	40A-Y95	2	1765	3040P-D
	40A-Y96	2	668	3040P-D

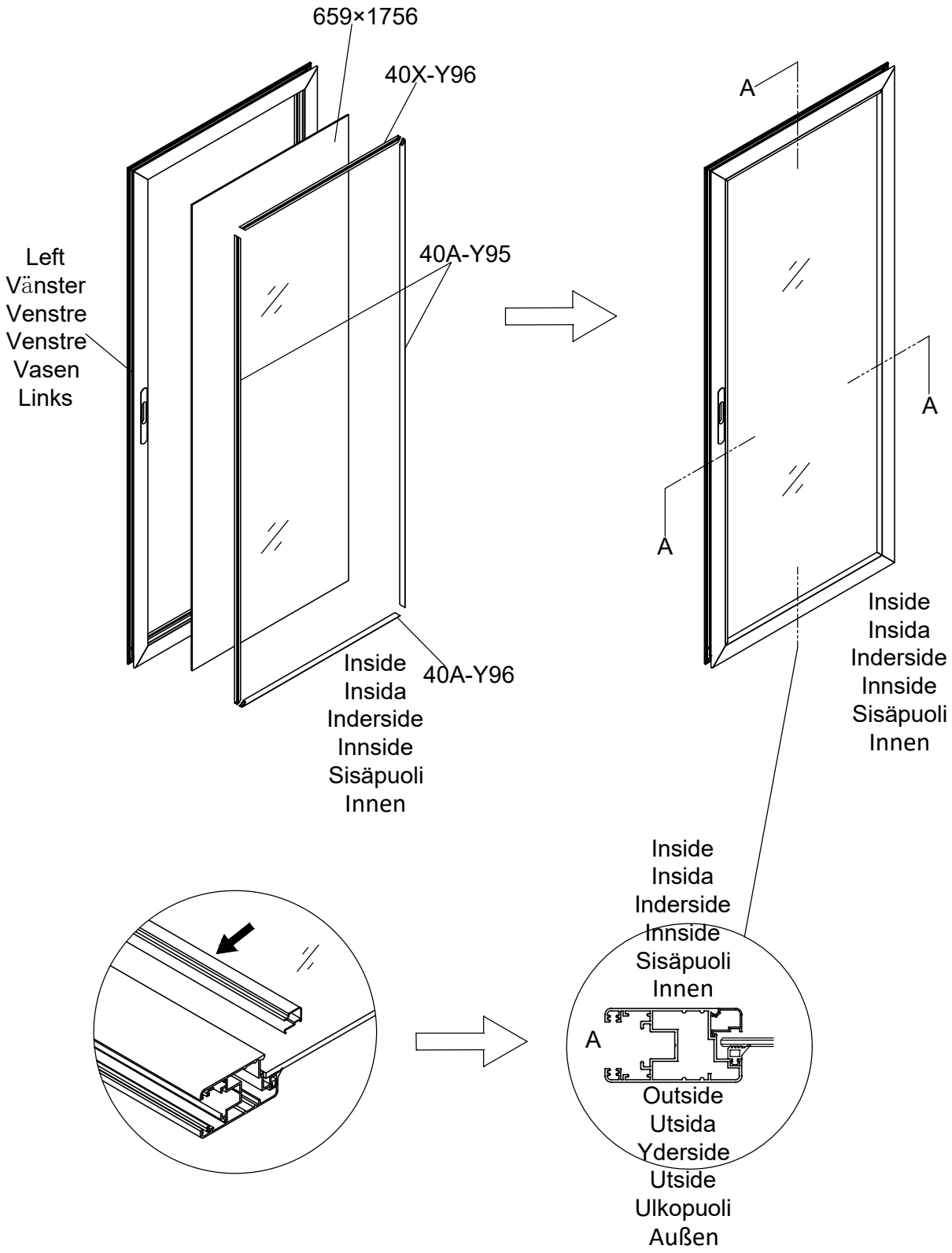

Part	NO.	QTY.	Length(MM)	CTN NO.
	MCJT002	11M		3040P-D
	MCJT002	6M		3040P-E

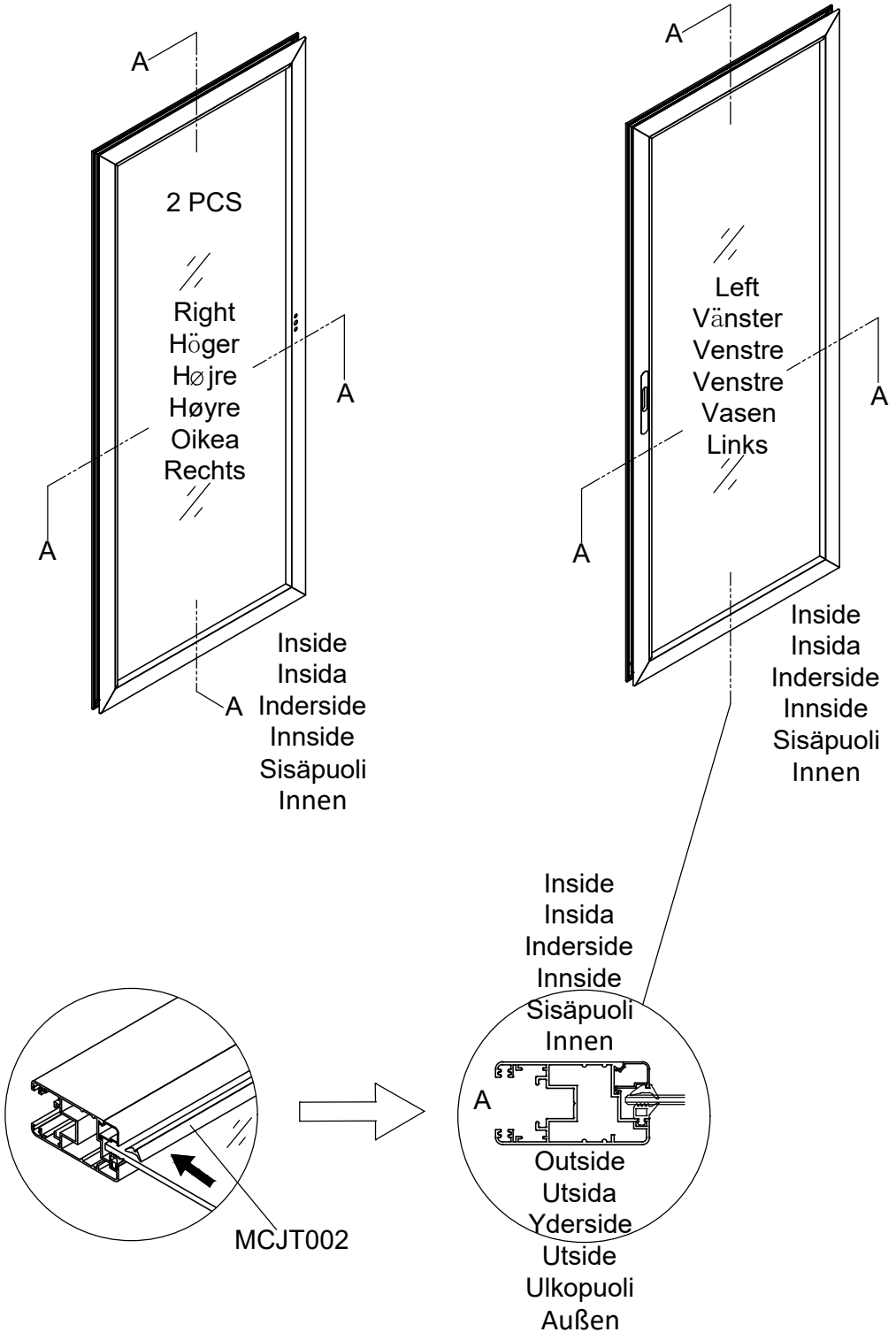

Part	NO.	QTY.	Length(MM)	CTN NO.
	40A-Y97R	1	1860	3040P-D
	40A-Y97-A	1	1851	3040P-D
	Z4.2-13	4	PCS	3040P-D

Part	NO.	QTY.	Length(MM)	CTN NO.
	40A-Y97R	1	1860	3040P-E
	40A-Y97-A	1	1851	3040P-E
	Z4.2-13	4	PCS	3040P-E

2 PCS

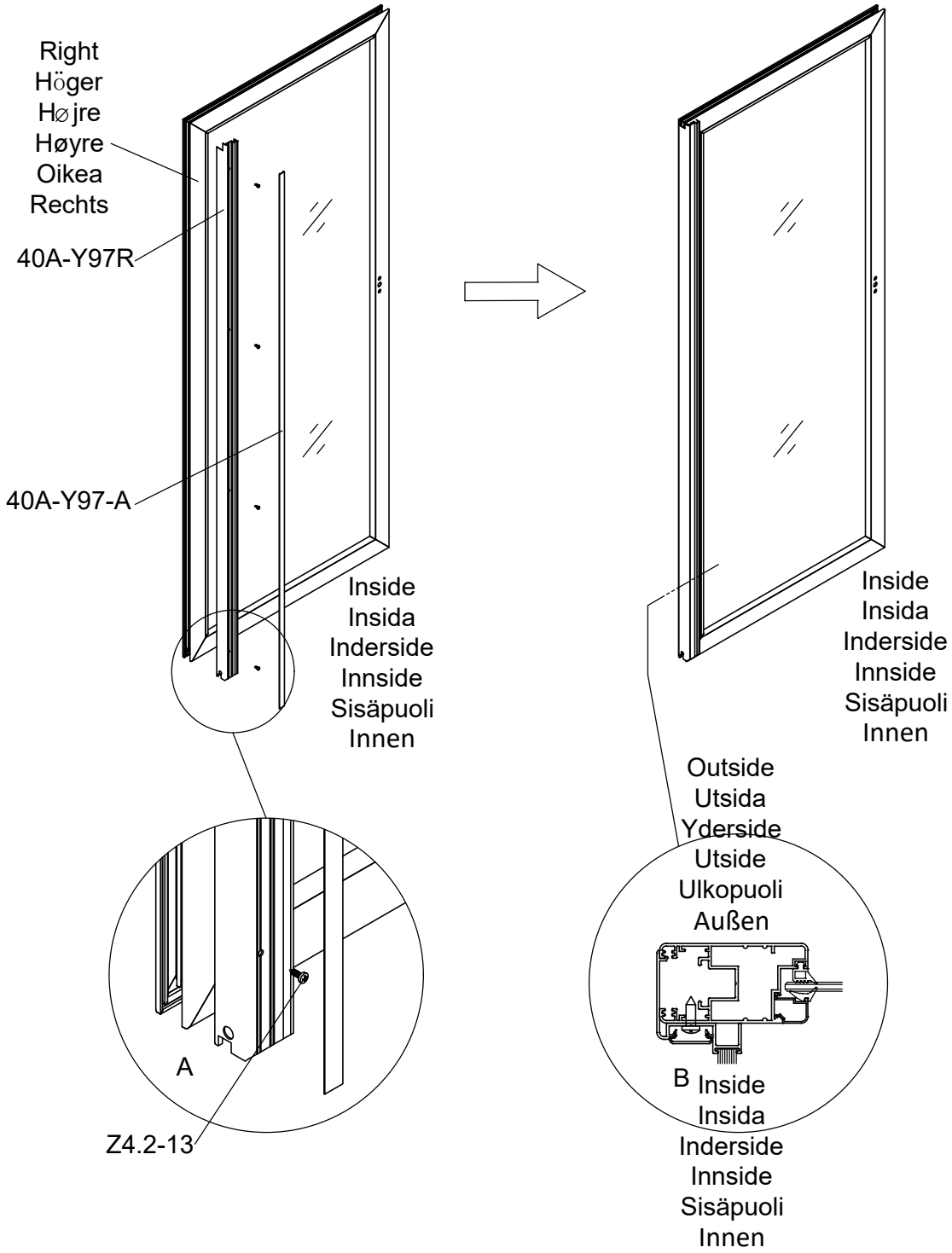

Part	NO.	QTY.	Length(MM)	CTN NO.
	40A-Y97L	1	1860	3040P-D
	40A-Y97-A	1	1851	3040P-D
	Z4.2-13	4	PCS	3040P-D

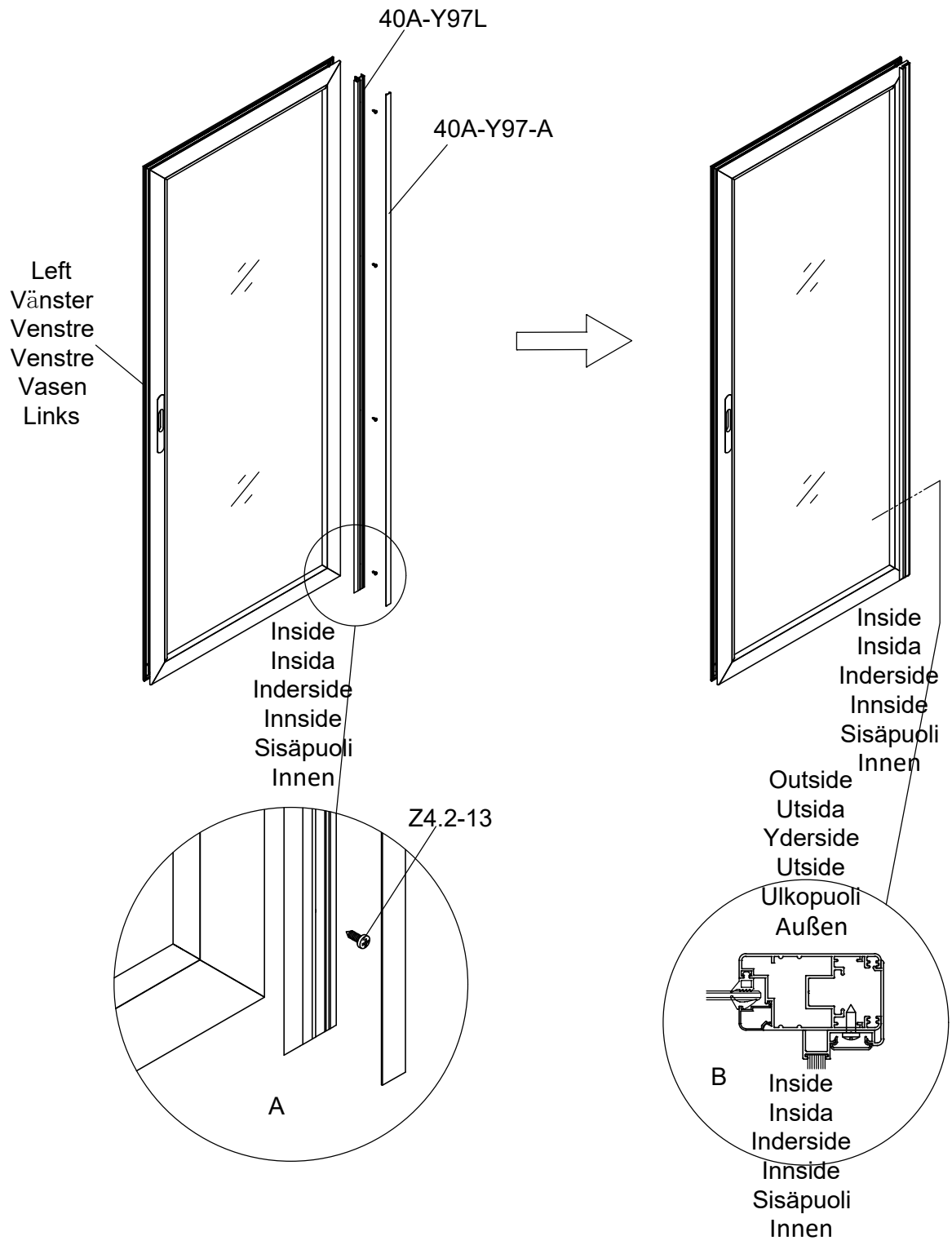

Part	NO.	QTY.	Length(MM)	CTN NO.
	40A-Y94	2	1835	3040P-D
	NSST120	3.8M		3040P-D
	T04	4	PCS	3040P-D
	Z4.2-38	6	PCS	3040P-D
	Z3.5-25	8	PCS	3040P-D

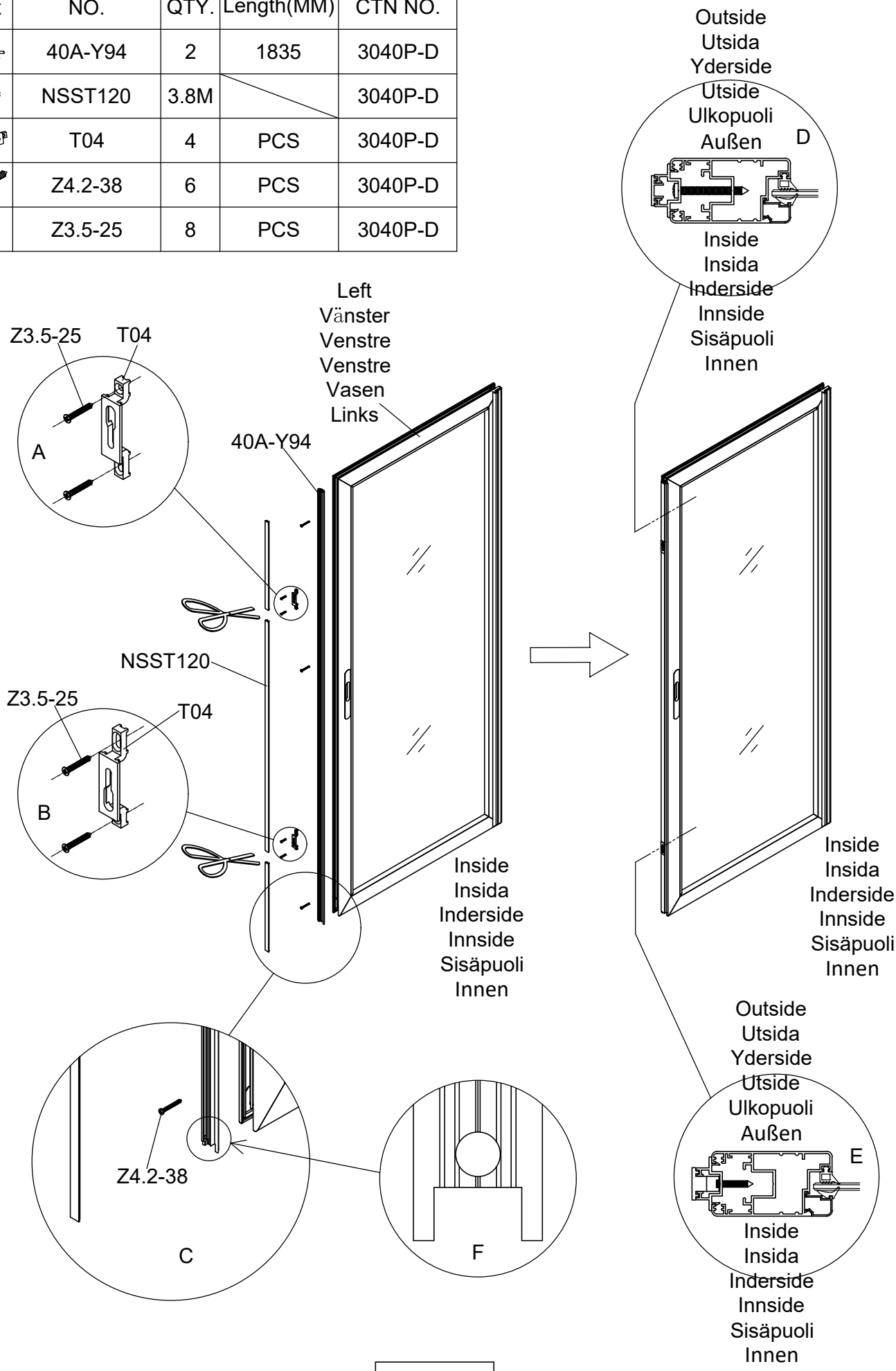

Part	NO.	QTY.	Length(MM)	CTN NO.
	40A-Y98-R	1	1910	3040P-D
	40A-Y98-L	1	1910	3040P-D
	M6-35	2	PCS	3040P-D
	Si6-35	6	PCS	3040P-D
	J05	6	PCS	3040P-D

Code	Length(MM)				
	3172	3173	3174	3175	3176
L3	44.5	420	795.5	1171	1546.5

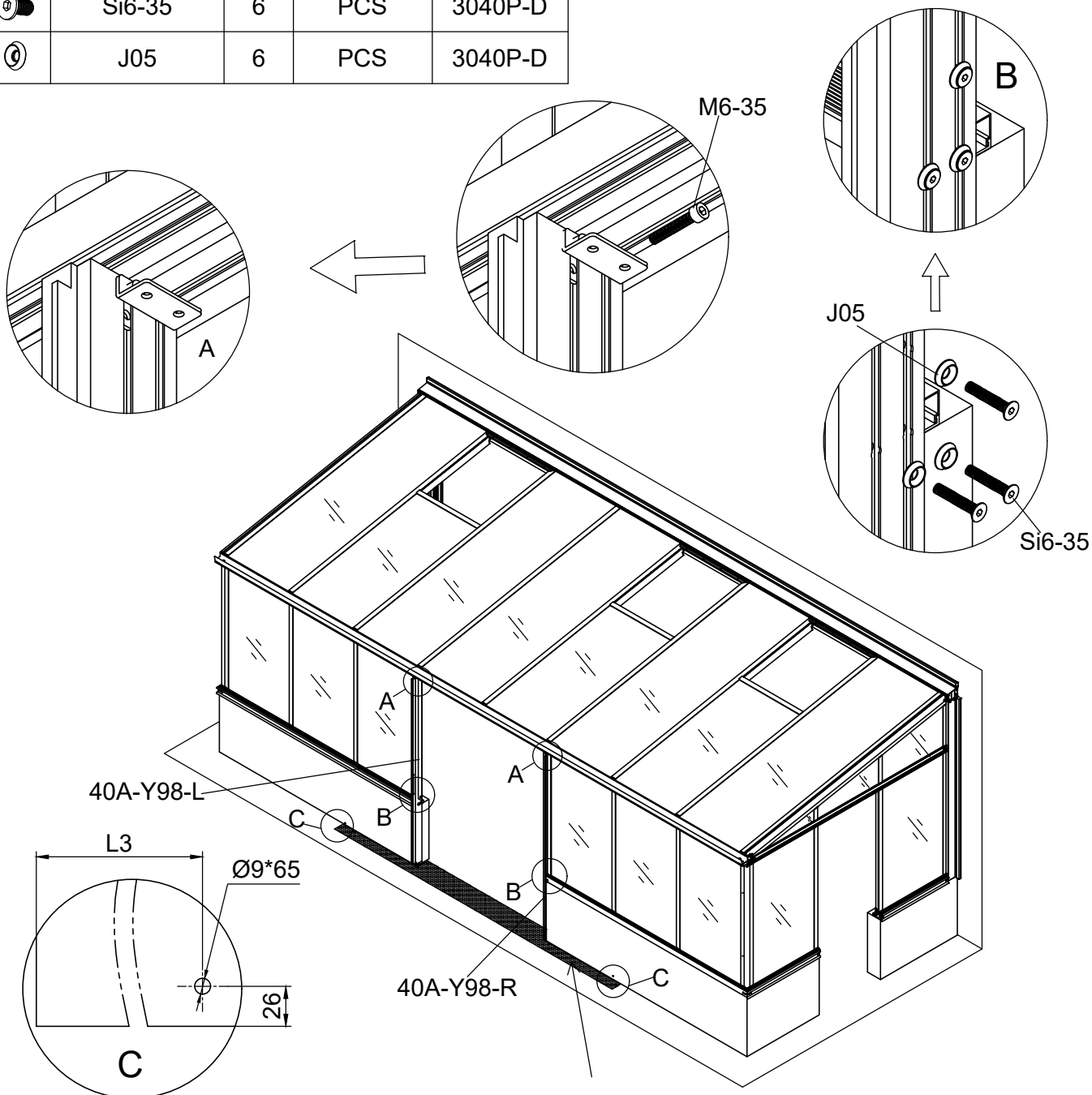

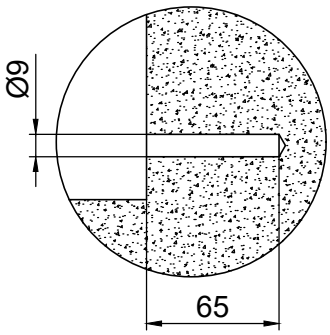

Make sure the floor below the doors frame should be flat and solid.

Se till att underlaget under dörrramen är plan och på solid grund.

Sørg for, at underlaget under dørkarmen er plan og på fast grund.

Sørg for at underlaget under dørterskelen er slett og på solid fundament.

Tarkista, että maa ovikarmin alla on sileä ja tasainen.

Achten Sie darauf, dass der Boden unter dem Türrahmen eben und fest ist.

Part	NO.	QTY.	Length(MM)	CTN NO.
	40A-Y98-SR	1	1910	3040P-E
	40A-Y98-SL	1	1910	3040P-E
	M6-35	2	PCS	3040P-E
	Si6-35	6	PCS	3040P-E
	J05	6	PCS	3040P-E
	7C26-031	2	PCS	3040P-E

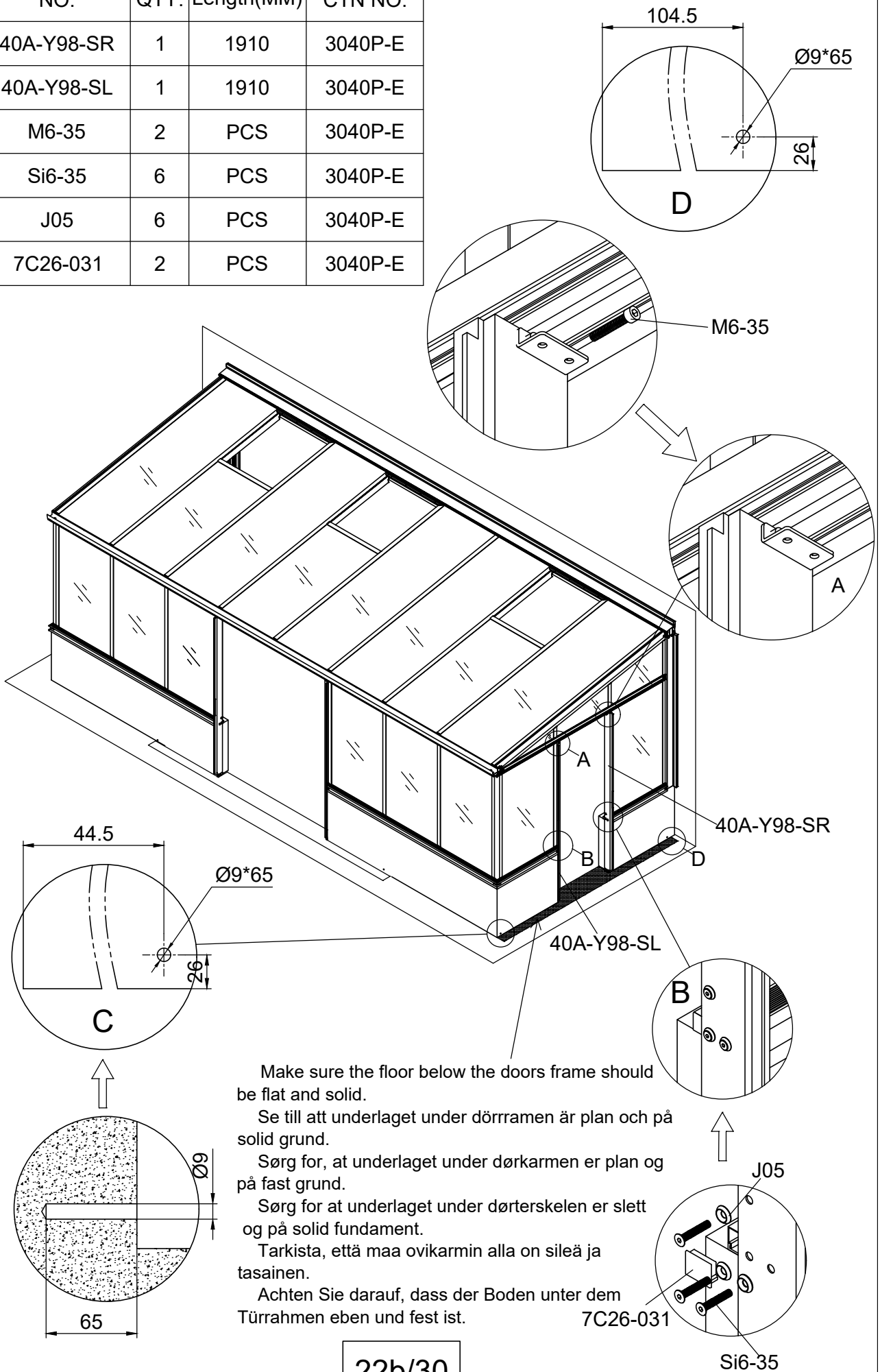

Make sure the floor below the doors frame should be flat and solid.

Se till att underlaget under dörrramen är plan och på solid grund.

Sørg for, at underlaget under dørkarmen er plan og på fast grund.

Sørg for at underlaget under dørterskelen er slett og på solid fundament.

Tarkista, että maa ovikarmin alla on sileä ja tasainen.

Achten Sie darauf, dass der Boden unter dem Türrahmen eben und fest ist.

Part	NO.	QTY.	Length(MM)	CTN NO.
	40A-Y99	1	1424	3040P-D
	40A-Y100	1	1424	3040P-D
	Si6-16	10	PCS	3040P-D
	J05	10	PCS	3040P-D
	PS6-60	2	PCS	3040P-D

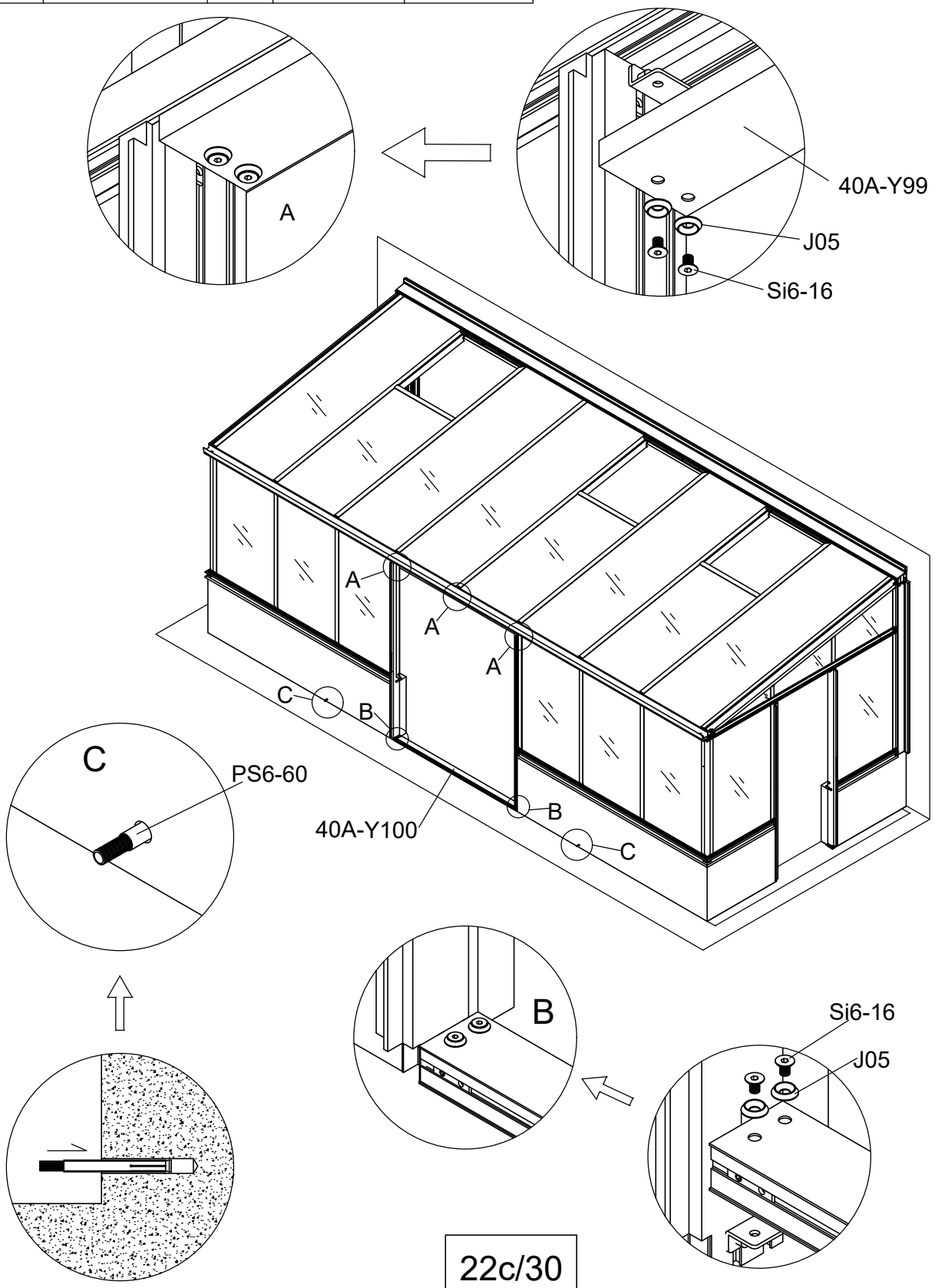

Part	NO.	QTY.	Length(MM)	CTN NO.
	40A-Y99-S	1	673	3040P-E
	40A-Y100-S	1	673	3040P-E
	Si6-16	8	PCS	3040P-E
	J05	8	PCS	3040P-E
	PS6-60	2	PCS	3040P-E

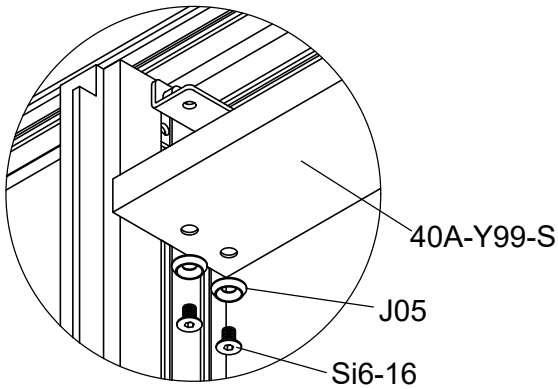

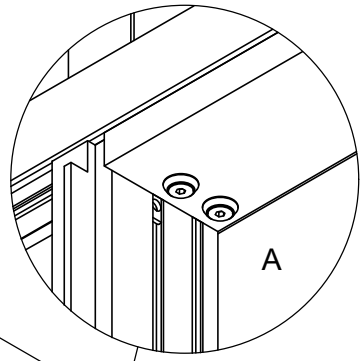

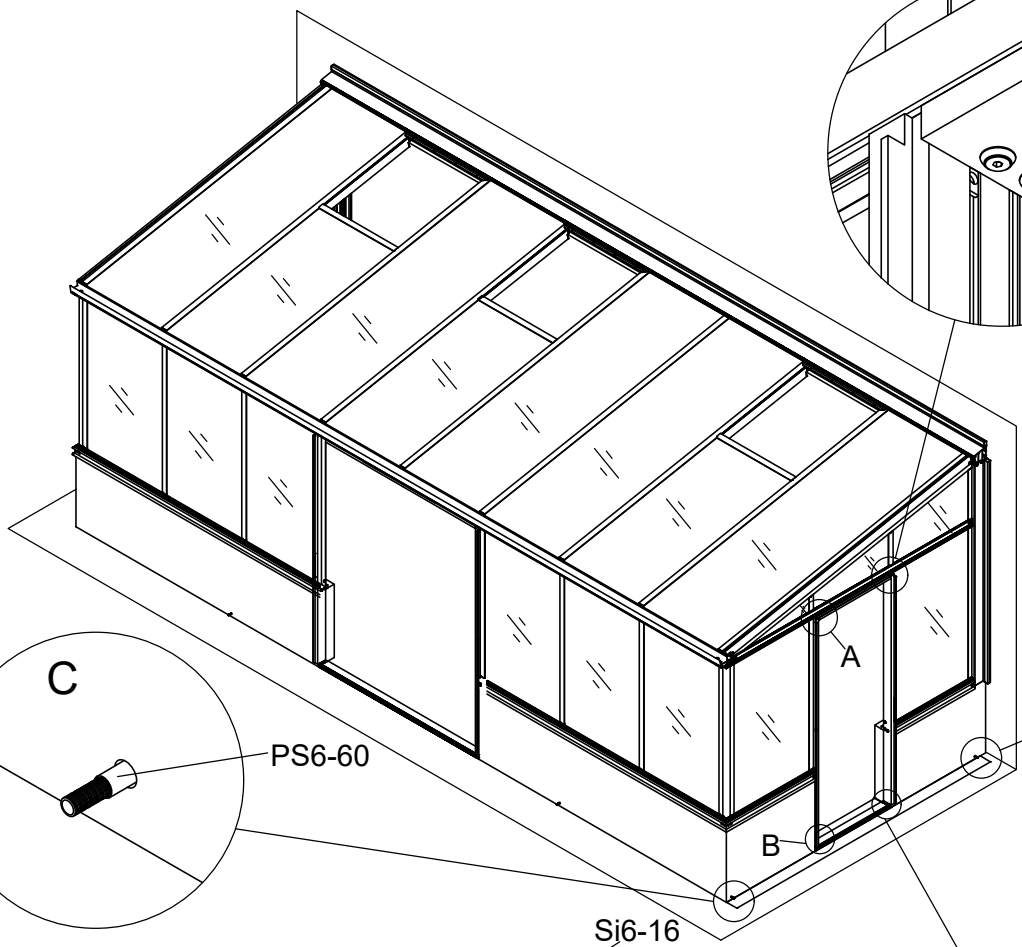

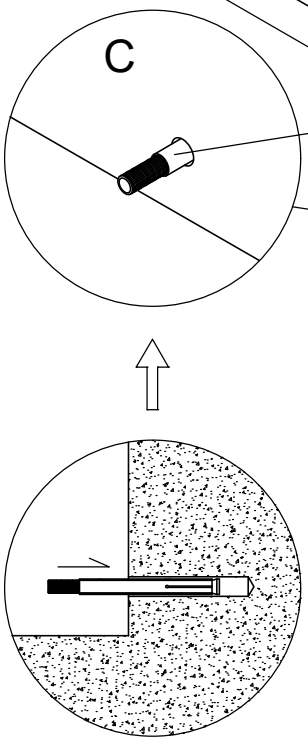

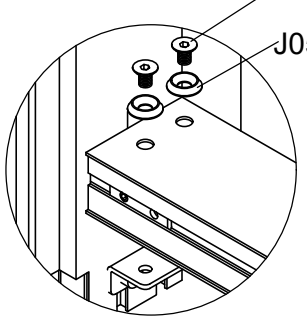

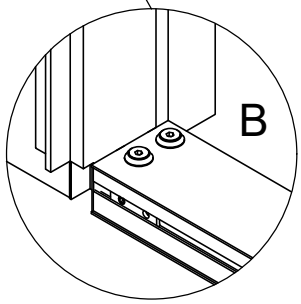

Part	NO.	QTY.	Length(MM)	CTN NO.
	40A-Y64	1	3016	3040P-D
	40A-Y17	1	3110	3040P-D
	7C28-004	5	PCS	3040P-D
	Z4.2-50	5	PCS	3040P-D
	Si6-25	3	PCS	3040P-D
	J05	3	PCS	3040P-D
	7C26-031	2	PCS	3040P-D

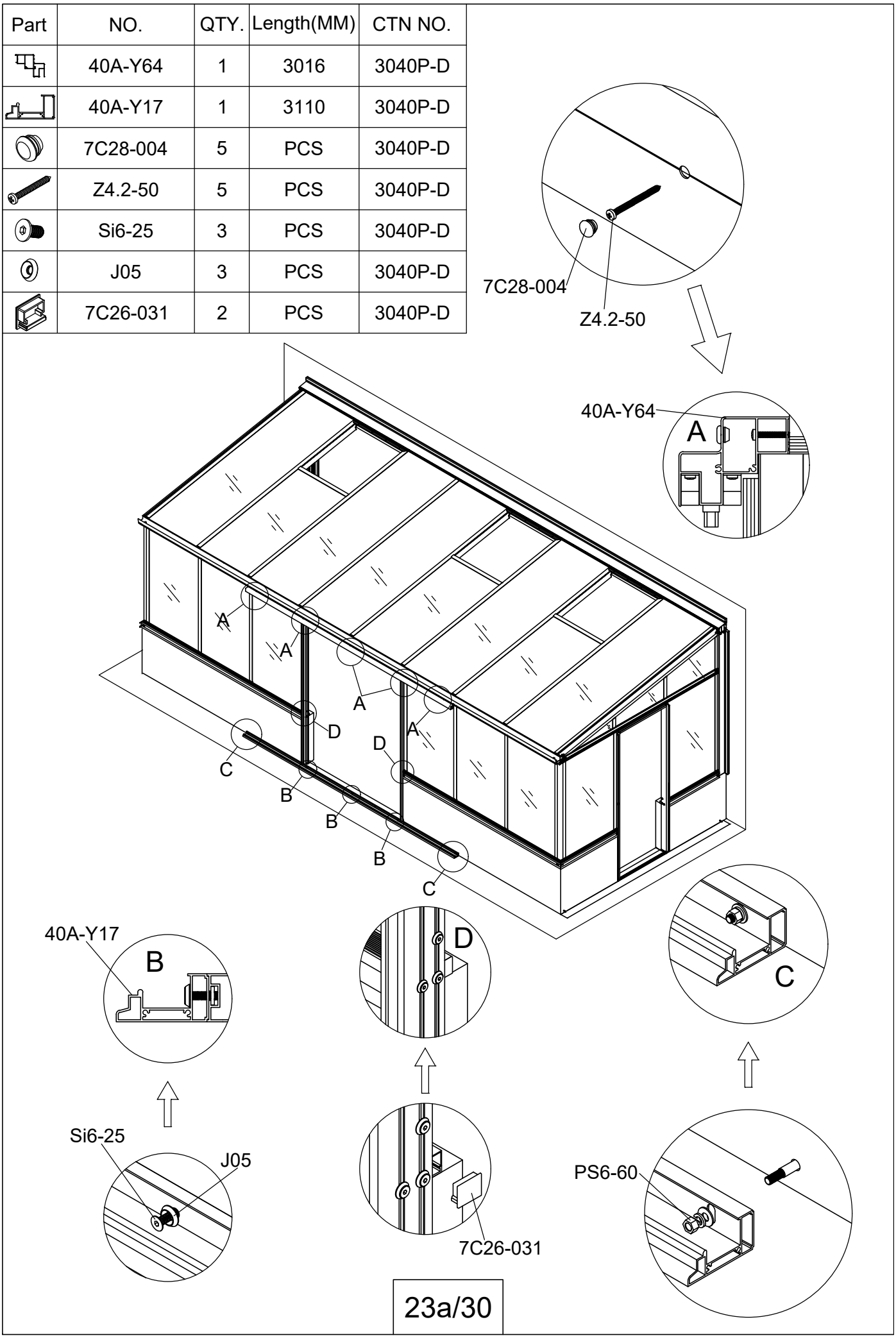

Part	NO.	QTY.	Length(MM)	CTN NO.
	40A-Y98A-R	1	1855	3040P-D
	40A-Y98A-L	1	1855	3040P-D

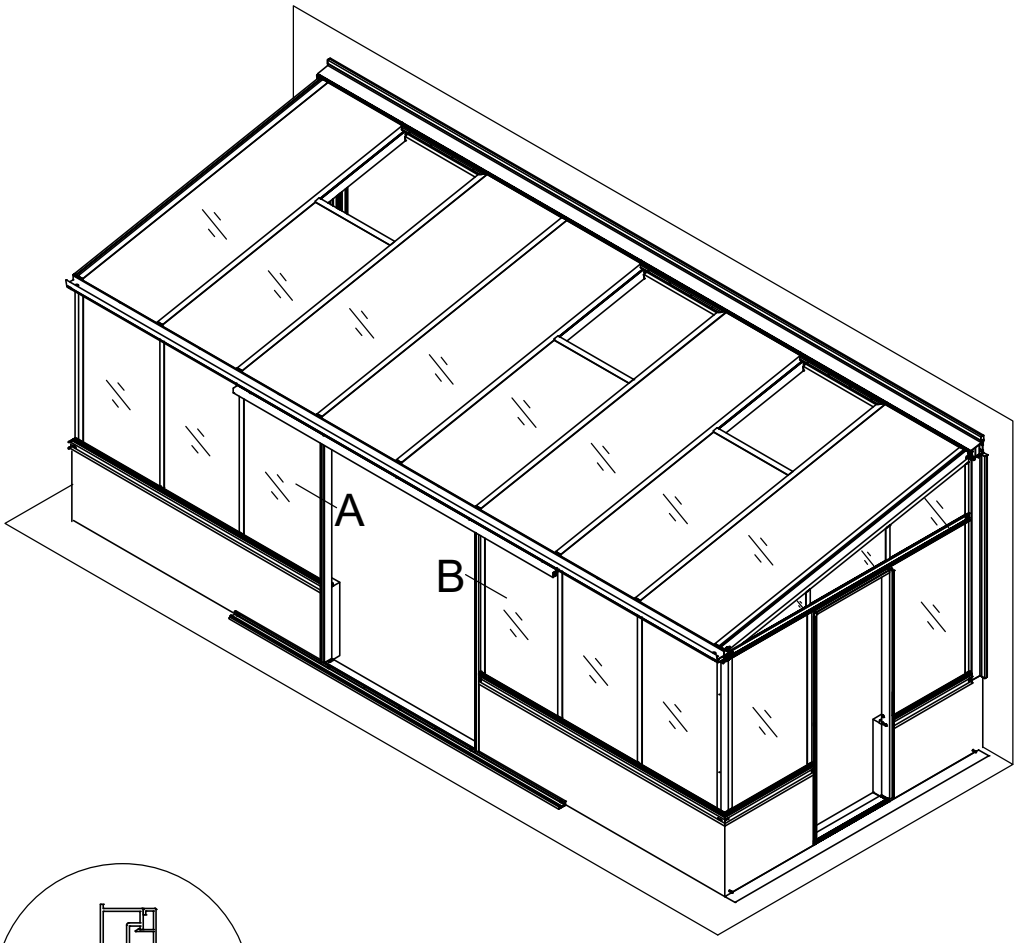

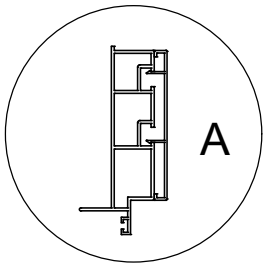

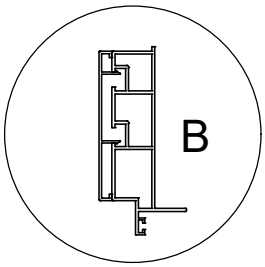

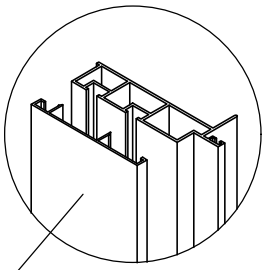

40A-Y98A-R

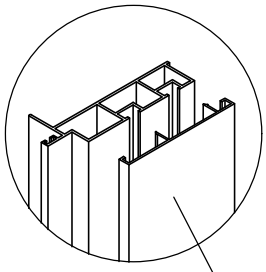

40A-Y98A-L

Part	NO.	QTY.	Length(MM)	CTN NO.
	40A-Y17-S01	1	2359	3040P-E
	Si6-25	3	PCS	3040P-E
	J05	3	PCS	3040P-E
	7B26-039	2	PCS	3040P-E
	Z4.2-13	4	PCS	3040P-E

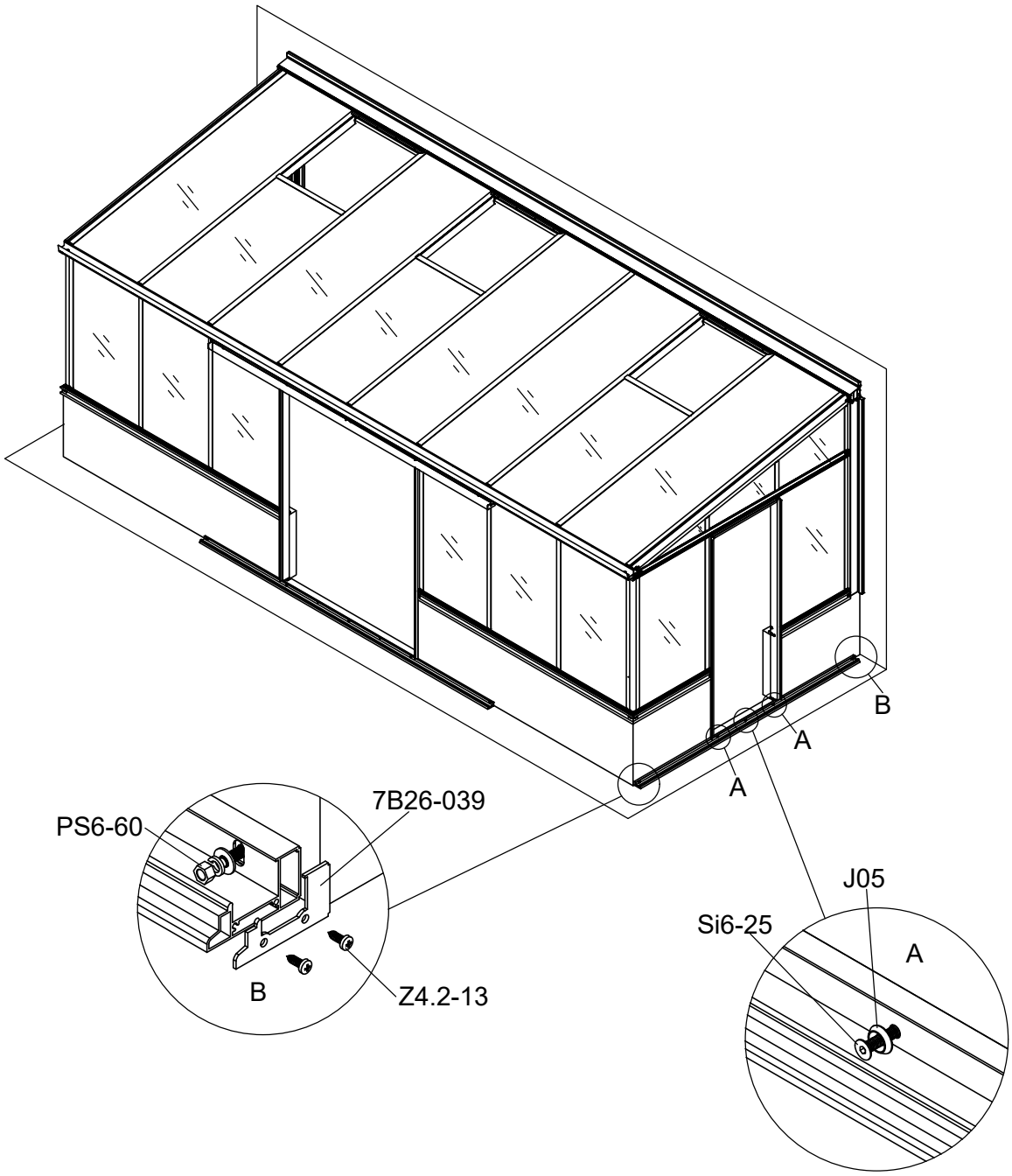

Part	NO.	QTY.	Length(MM)	CTN NO.
	40A-Y64-S01L	1	2265	3040P-E
	40X-Y94-S01L	1	1885	3040P-E
	7C28-004	2	PCS	3040P-E
	Z4.2-50	2	PCS	3040P-E
	7B26-038	2	PCS	3040P-E
	Z4.2-13	4	PCS	3040P-E

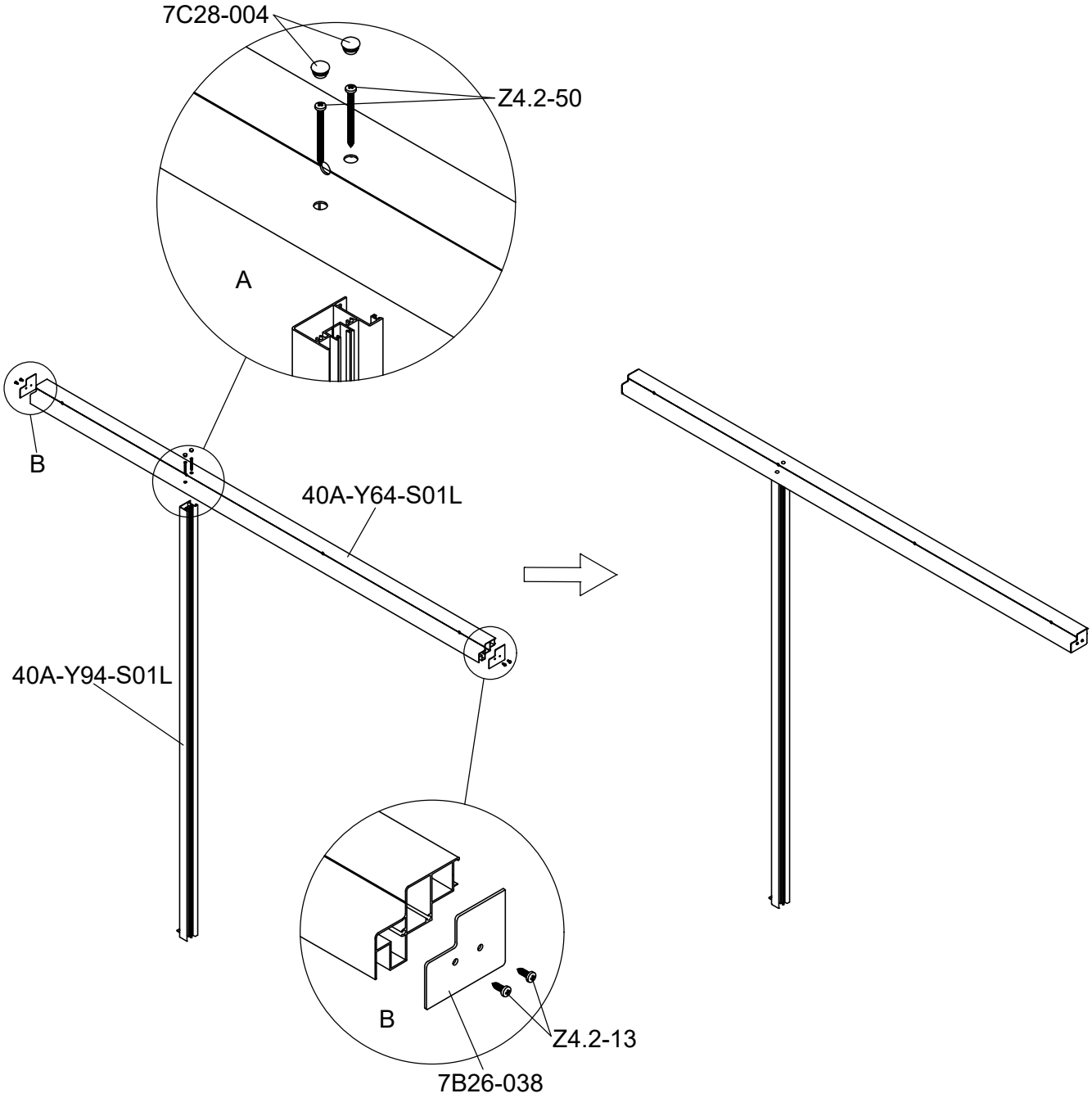

Part	NO.	QTY.	Length(MM)	CTN NO.
	7C28-004	4	PCS	3040P-E
	Z4.2-50	4	PCS	3040P-E
	Z4.2-13	2	PCS	3040P-E

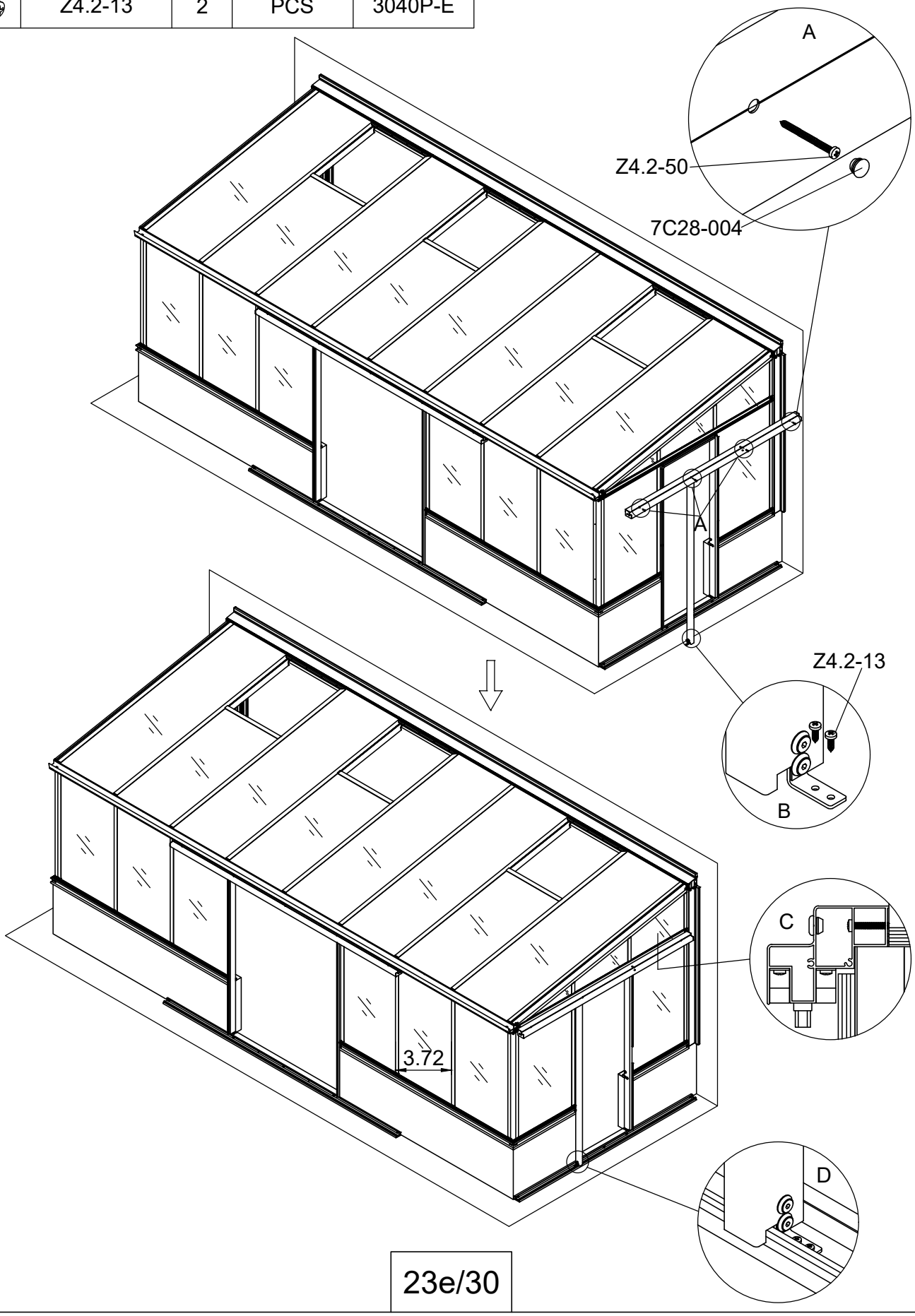

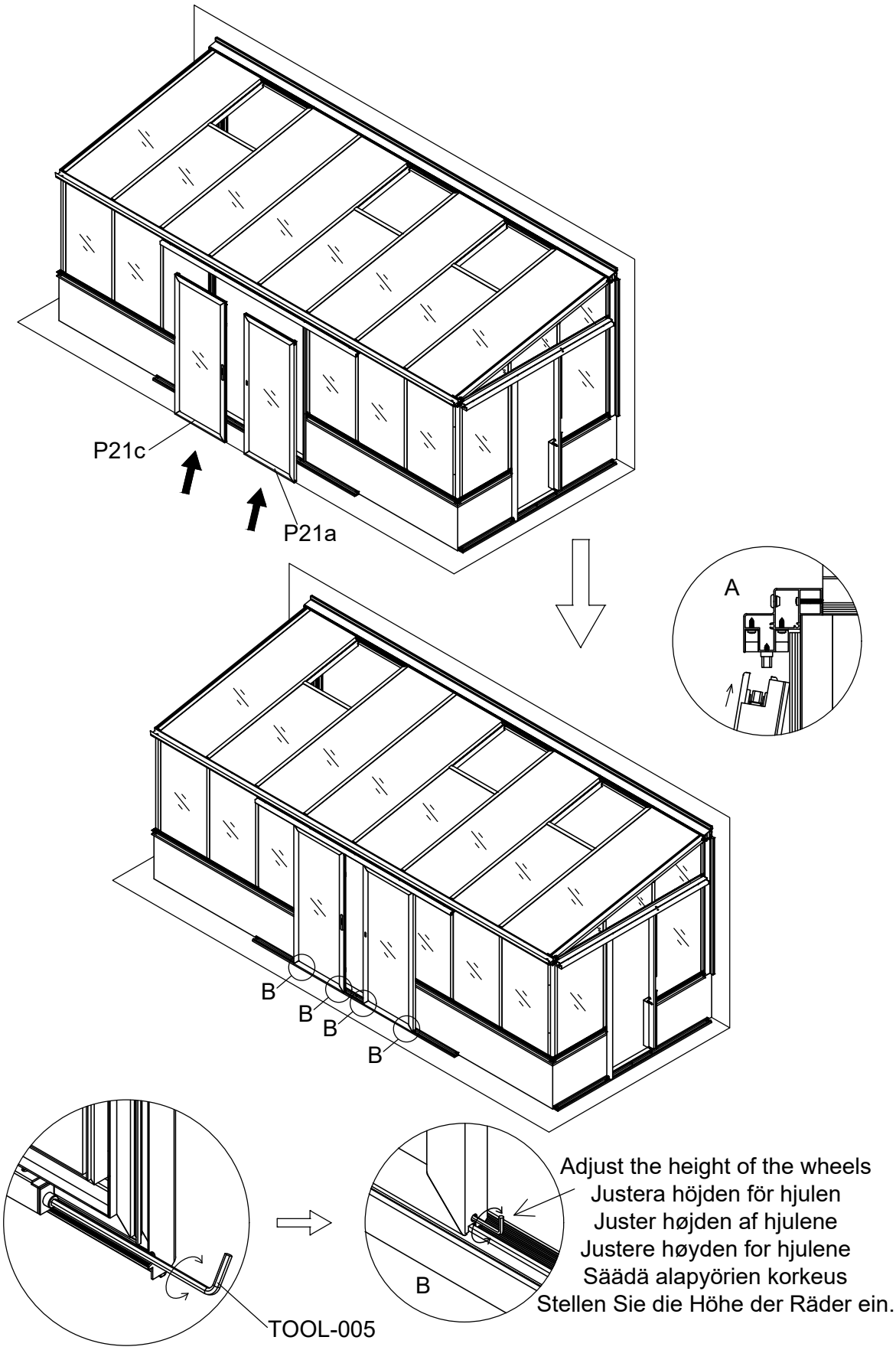
P21c
P21a
A
B
B
B
B
TOOL-005
B
Adjust the height of the wheels
Justera höjden för hjulen
Juster højden af hjulene
Justere høyden for hjulene
Säädä alapyörien korkeus
Stellen Sie die Höhe der Räder ein.

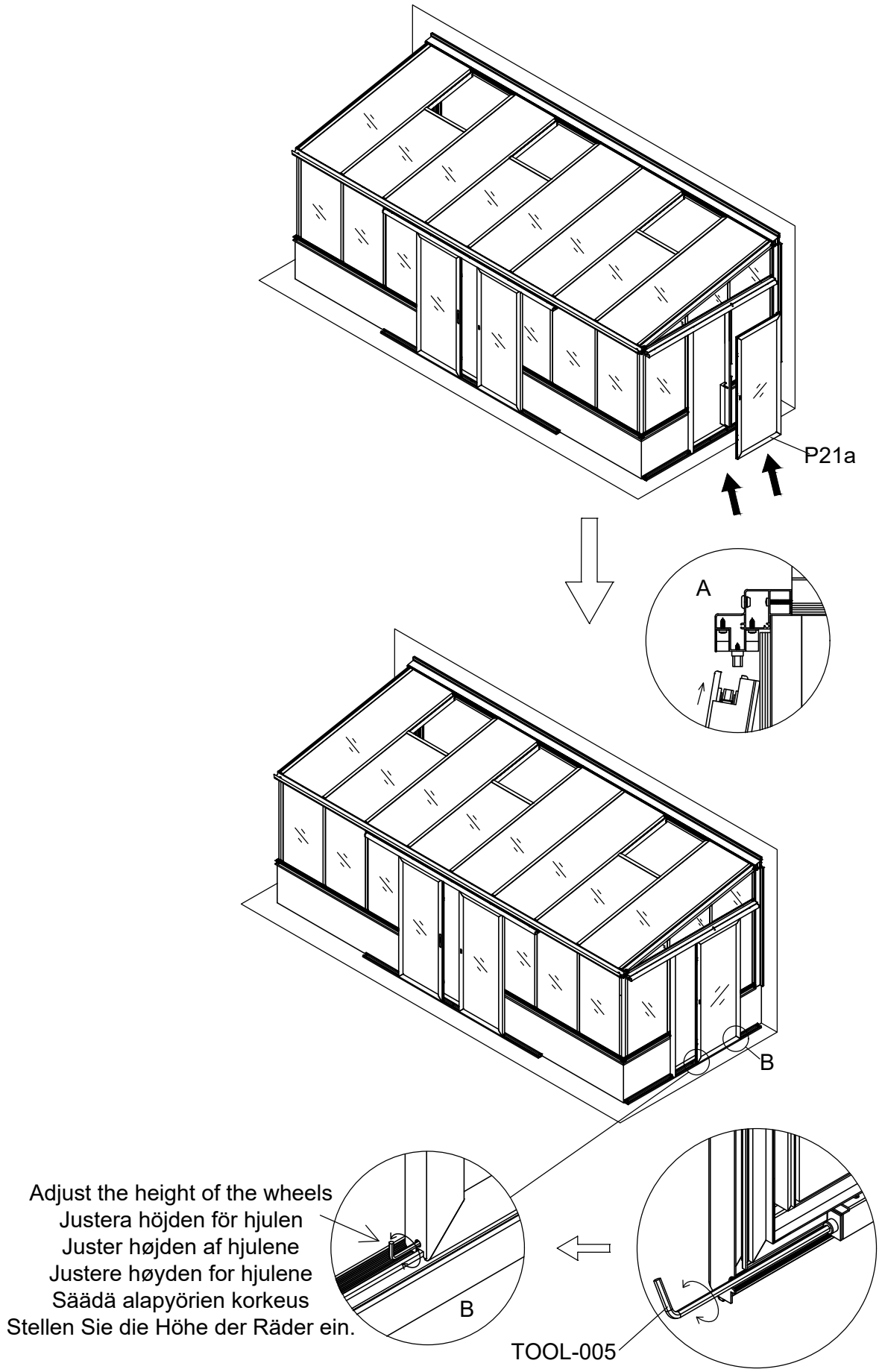
P21a
A
B
Adjust the height of the wheels
Justera höjden för hjulen
Juster højden af hjulene
Justere høyden for hjulene
Säädä alapyörien korkeus
Stellen Sie die Höhe der Räder ein.
B
TOOL-005

Part	NO.	QTY.	Length(MM)	CTN NO.
	T01	1	PCS	3040P-D
	T01A	1	PCS	3040P-D
	J02	2	PCS	3040P-D
	7B26-039	2	PCS	3040P-D
	7B26-038	2	PCS	3040P-D
	M4-40	2	PCS	3040P-D
	Mi4-17	2	PCS	3040P-D
	Z3.5-25	4	PCS	3040P-D
	Z4.2-13	8	PCS	3040P-D

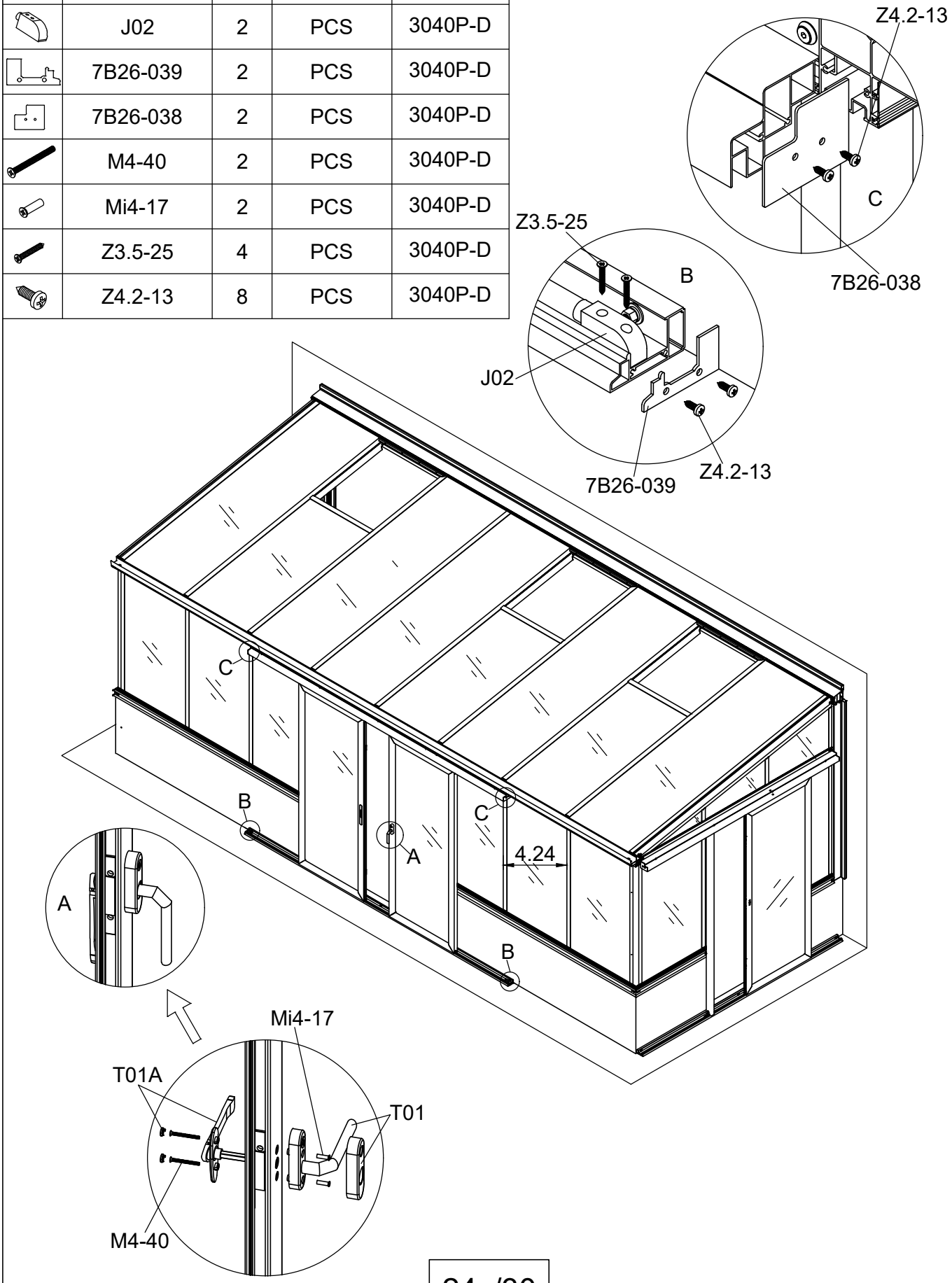

Part	NO.	QTY.	Length(MM)	CTN NO.
	T01	1	PCS	3040P-E
	T01A	1	PCS	3040P-E
	J02	1	PCS	3040P-E
	M4-40	2	PCS	3040P-E
	Mi4-17	2	PCS	3040P-E
	Z3.5-25	2	PCS	3040P-E

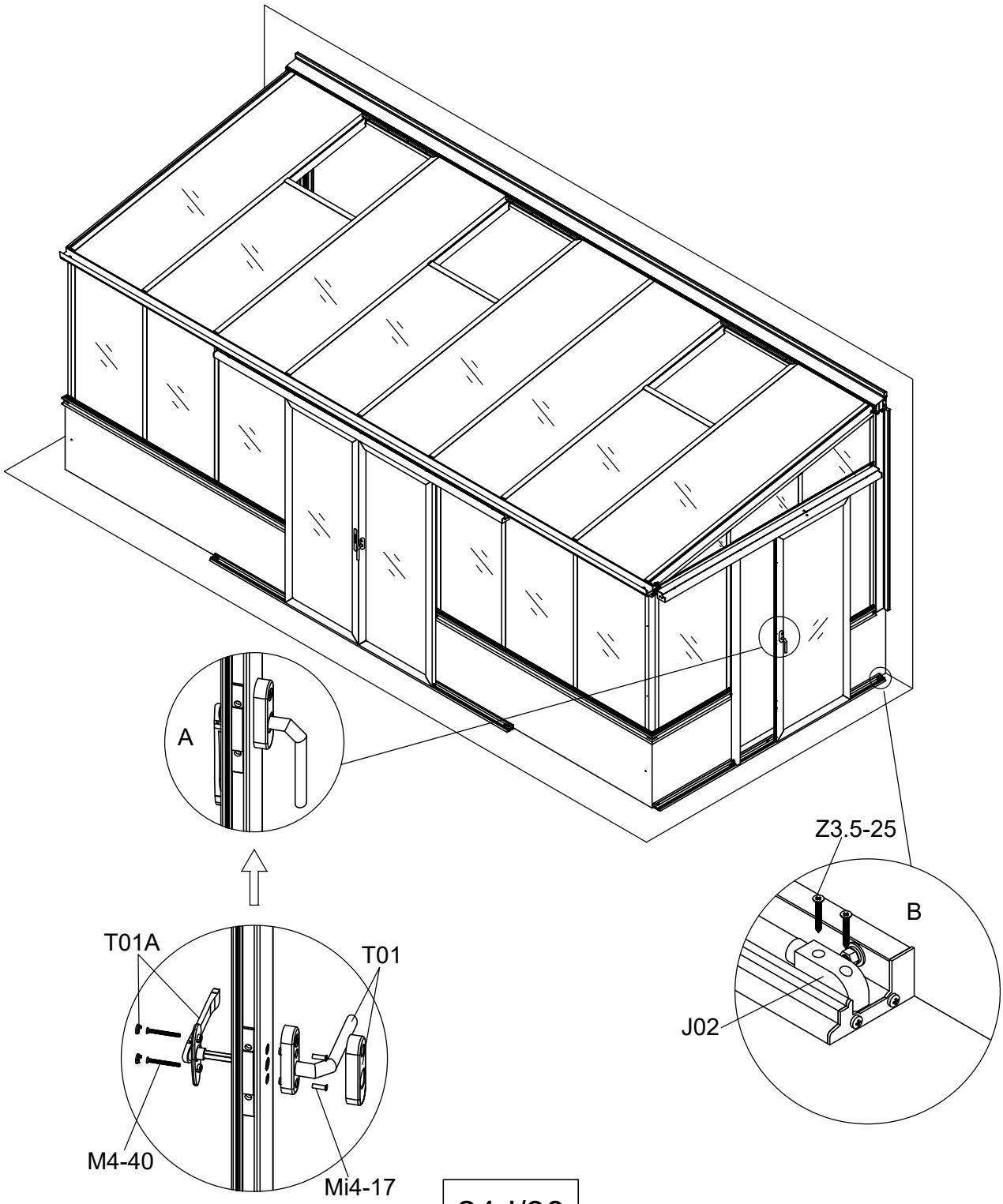

Part	NO.	QTY.	Length(MM)	CTN NO.
	NSST120	1.9M		3040P-E
	T04	2	PCS	3040P-E
	Z3.5-25	4	PCS	3040P-E

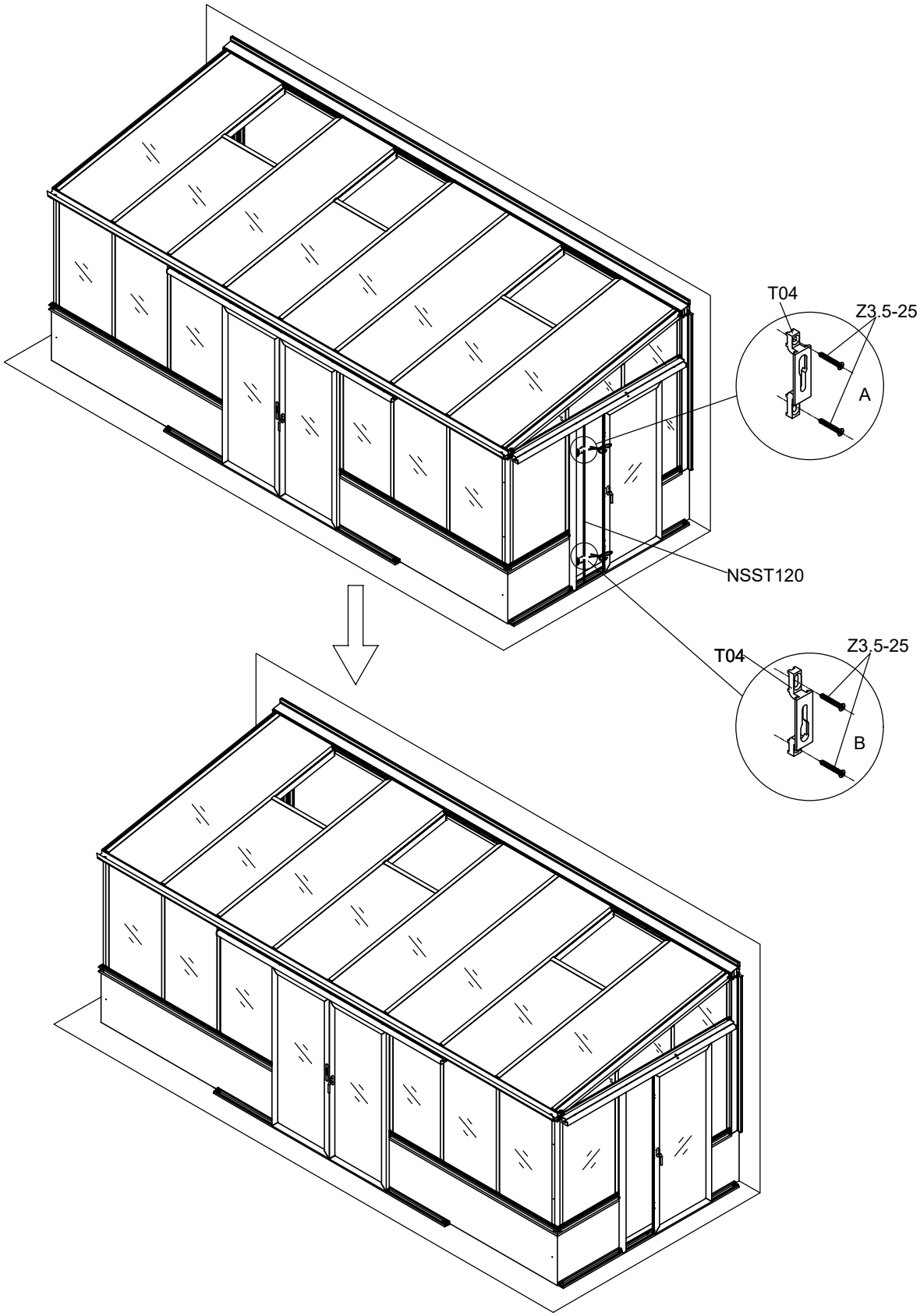

Part	NO.	QTY.					Length(MM)
		3172	3173	3174	3175	3176	
	40X-P80E-A	1	2	2	3	3	791
	40X-Y81E	2	4	4	6	6	882
	40X-Y82E	1	2	2	3	3	801
	W06	4	8	8	12	12	46
	W04	4	8	8	12	12	PCS
	782×863	1	2	2	3	3	863
	MCJT002	2	4	4	6	6	12

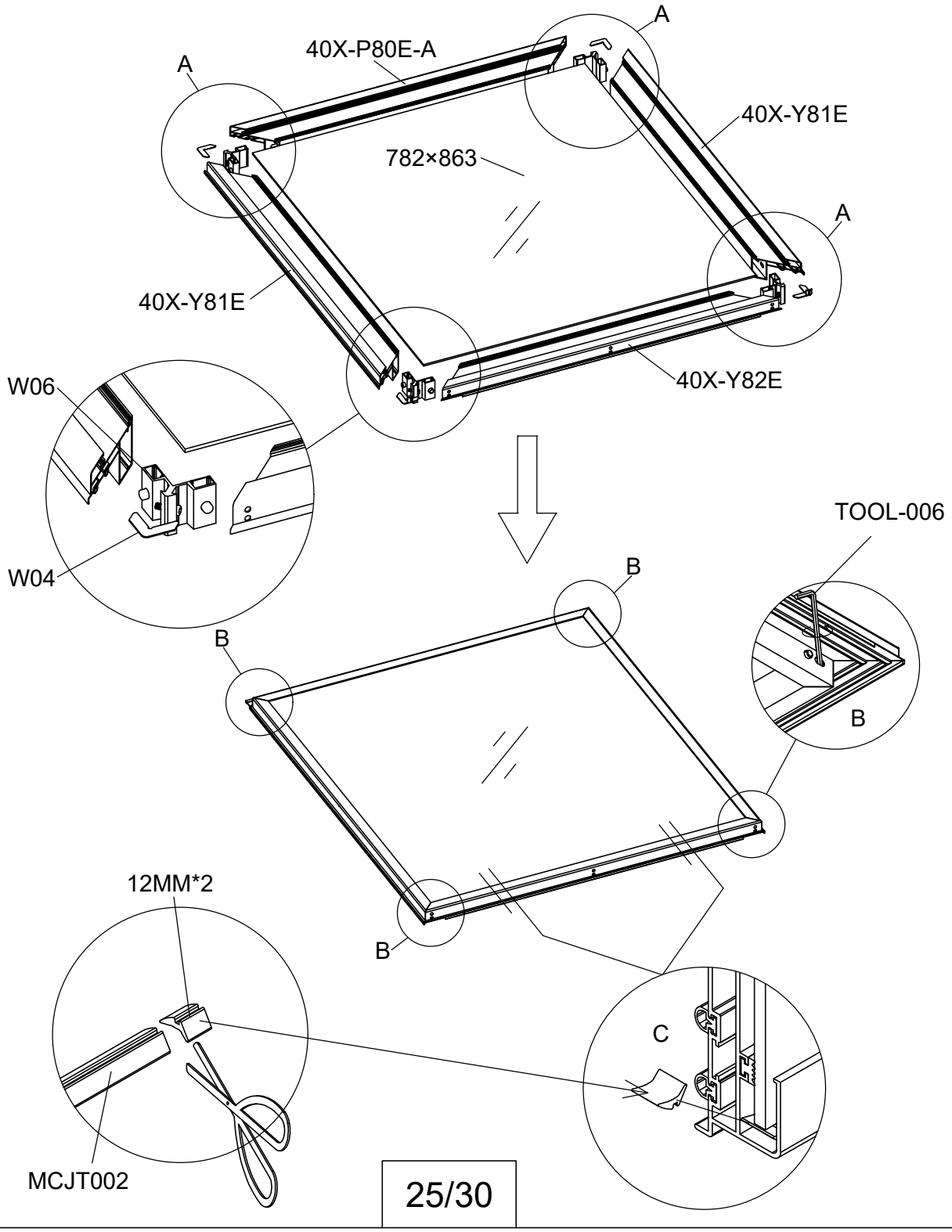

Part	NO.	QTY.					Length(MM)
		3172	3173	3174	3175	3176	
	MCJT002	3.5M	7M	7M	10.5M	10.5M	
	J09	8	16	16	24	24	PCS

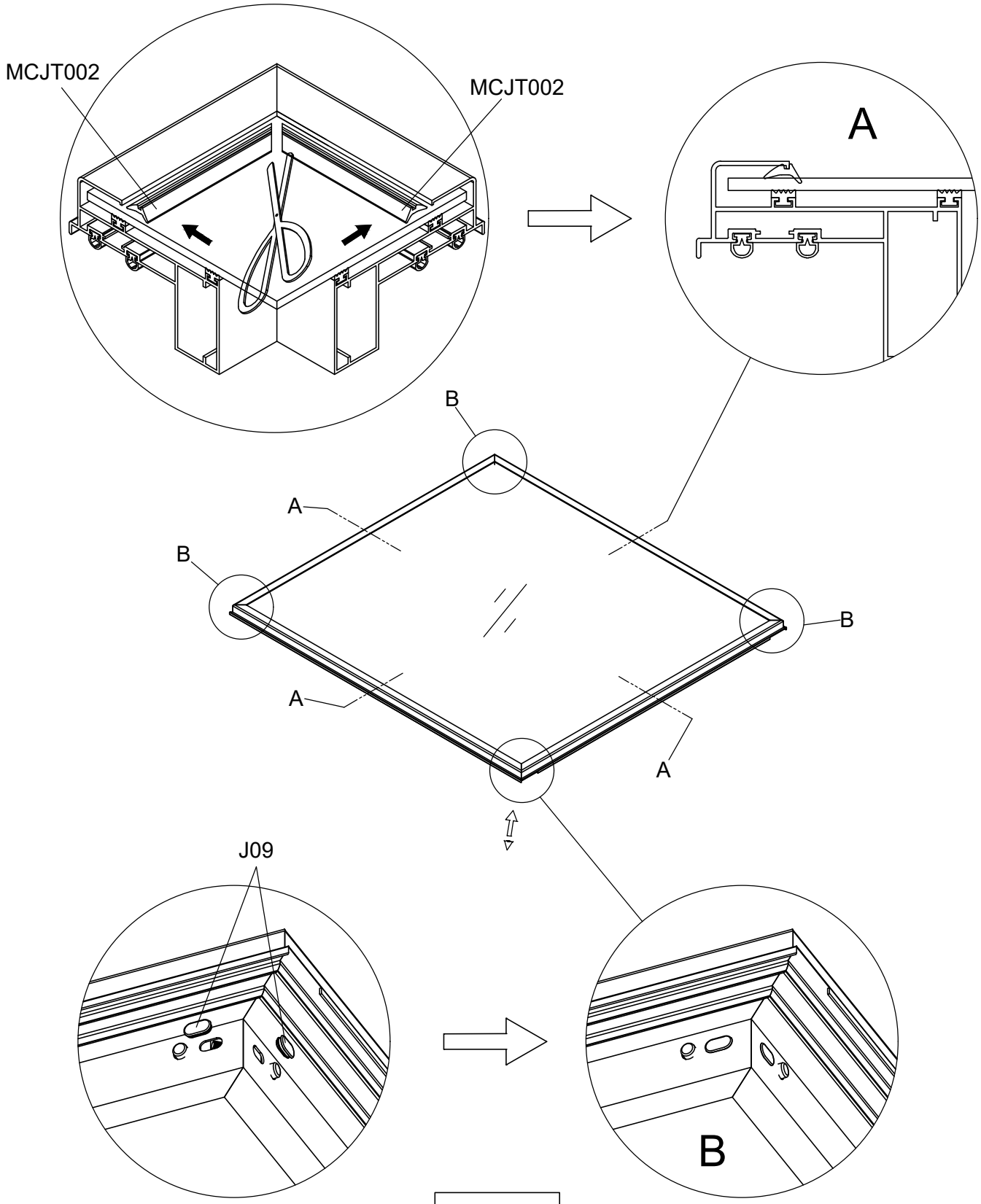

Part	NO.	QTY.					Length(MM)
		3172	3173	3174	3175	3176	
	Si6-16	4	8	8	12	12	PCS
	J05	4	8	8	12	12	PCS

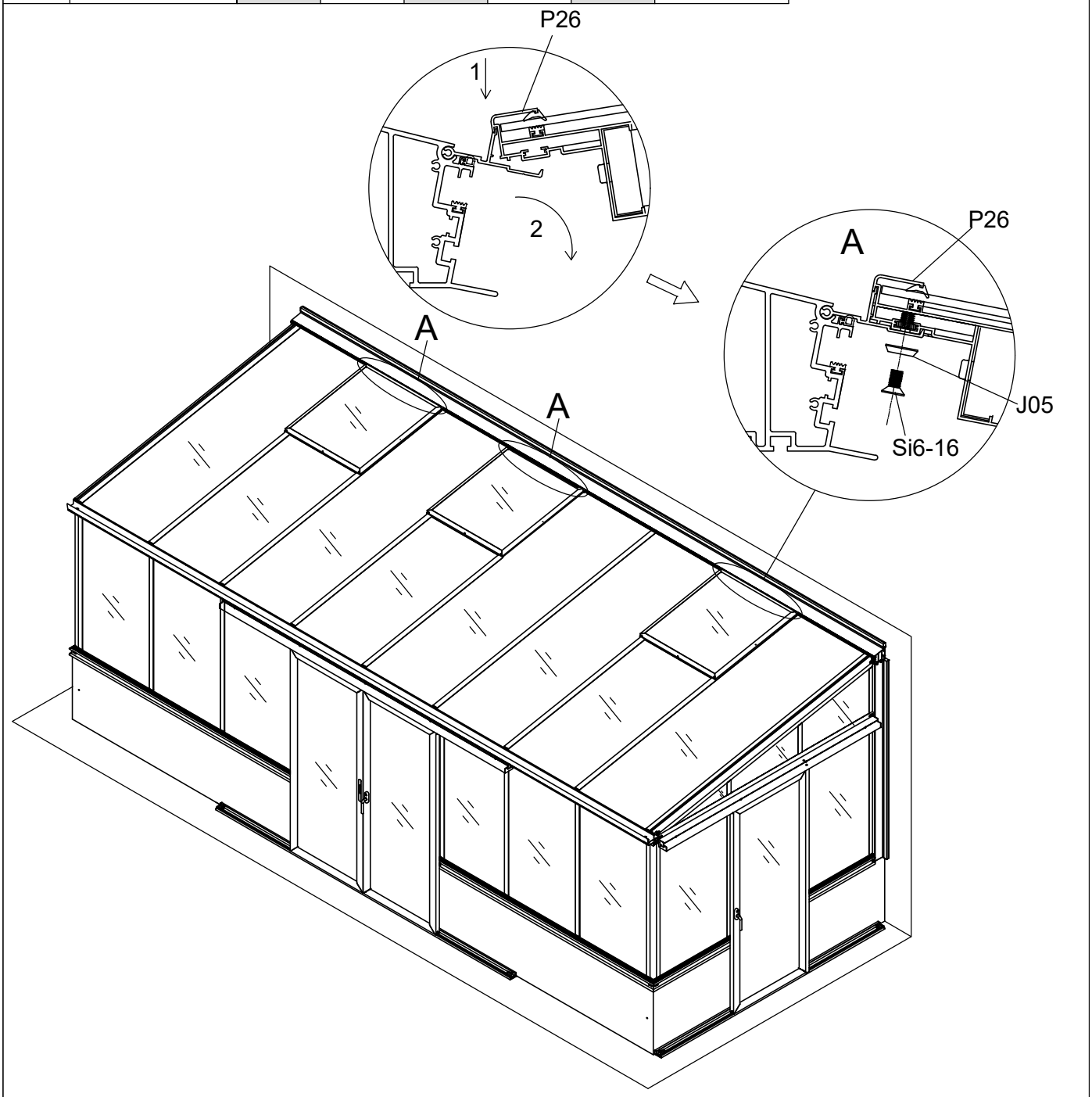

3172	3173	3174	3175	3176
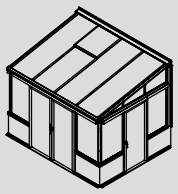	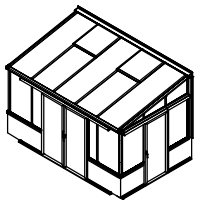	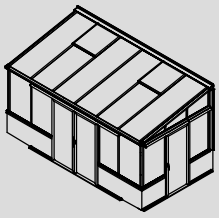	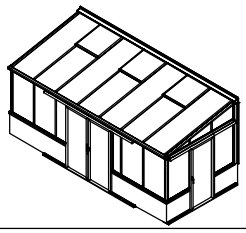	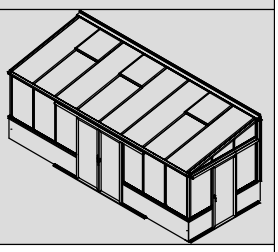

Part	NO.	QTY.	Length(MM)
	J08	1	PCS

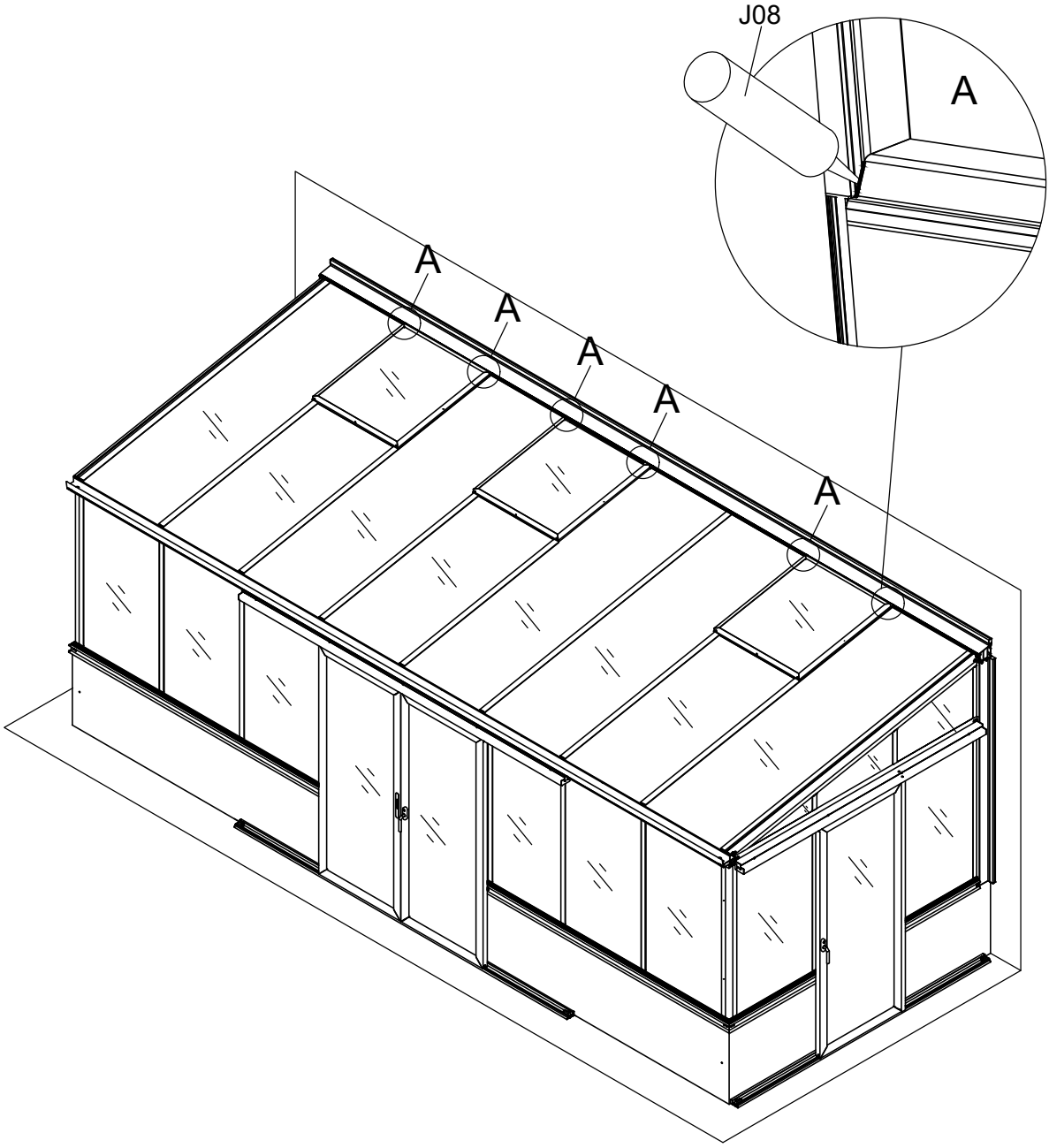

3172	3173	3174	3175	3176
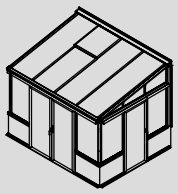	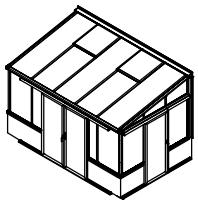	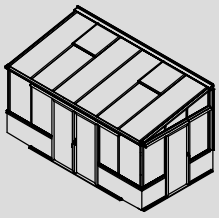	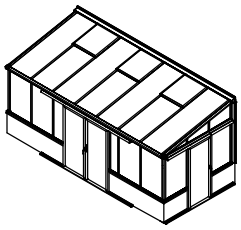	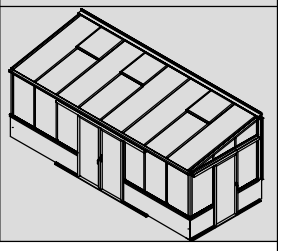

Part	NO.	QTY.	Length(MM)
	7C33-S02	2	PCS

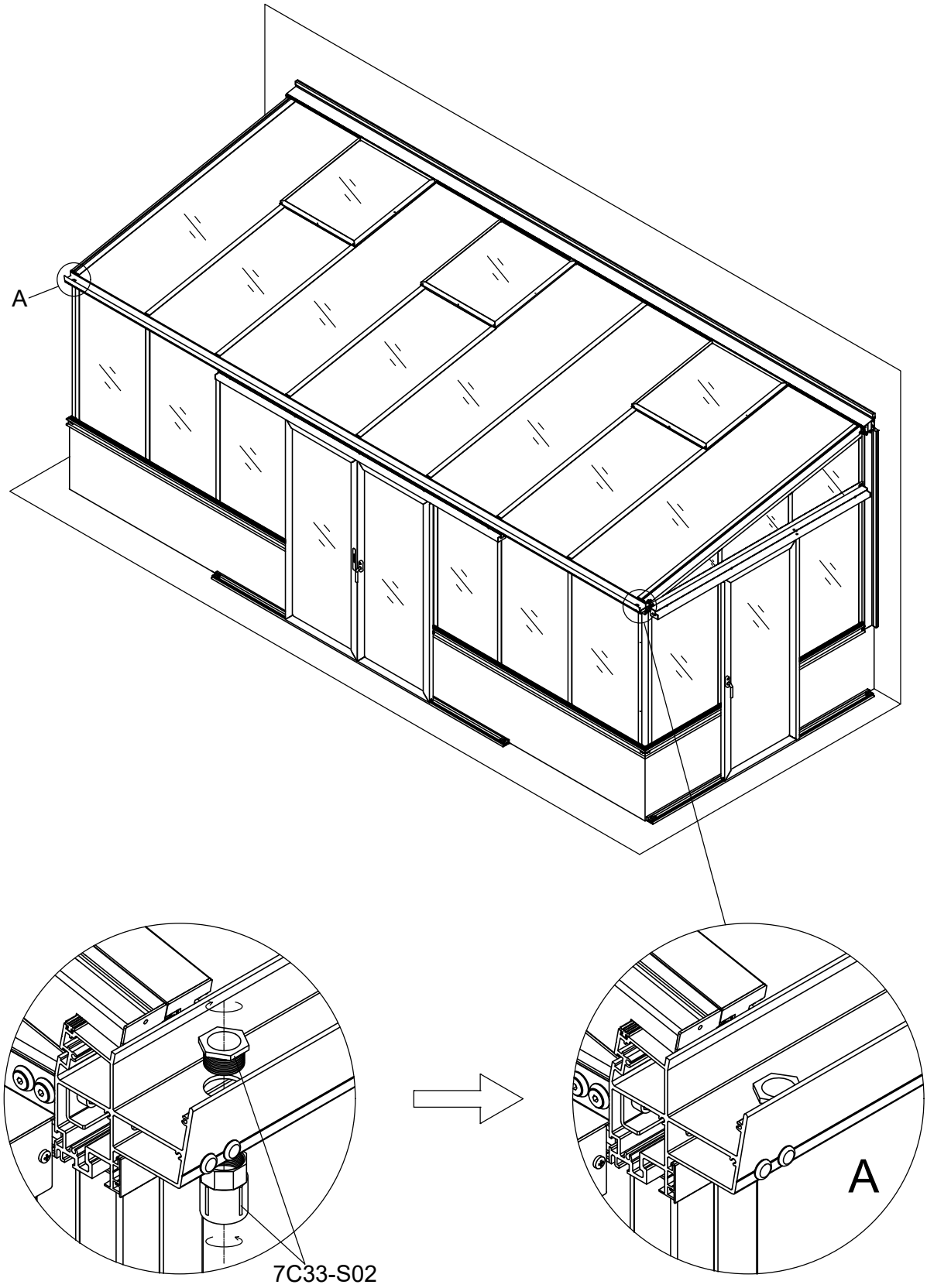

Part	NO.	QTY.	Length(MM)
	7C26-S01A	2	1900
	7C33-S03	4	PCS
	Z4.8-25	4	PCS
	7C33-S04	2	PCS
	J07-A	2	PCS
	J07-B	2	PCS

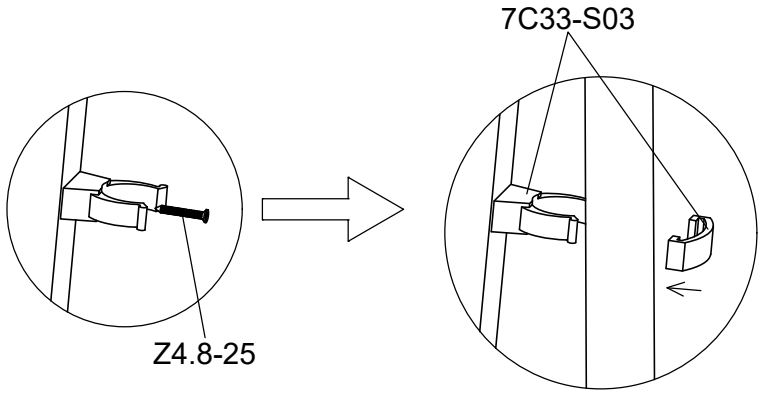

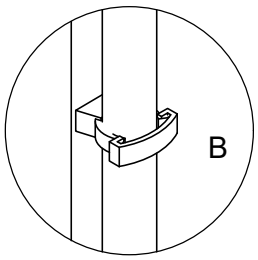

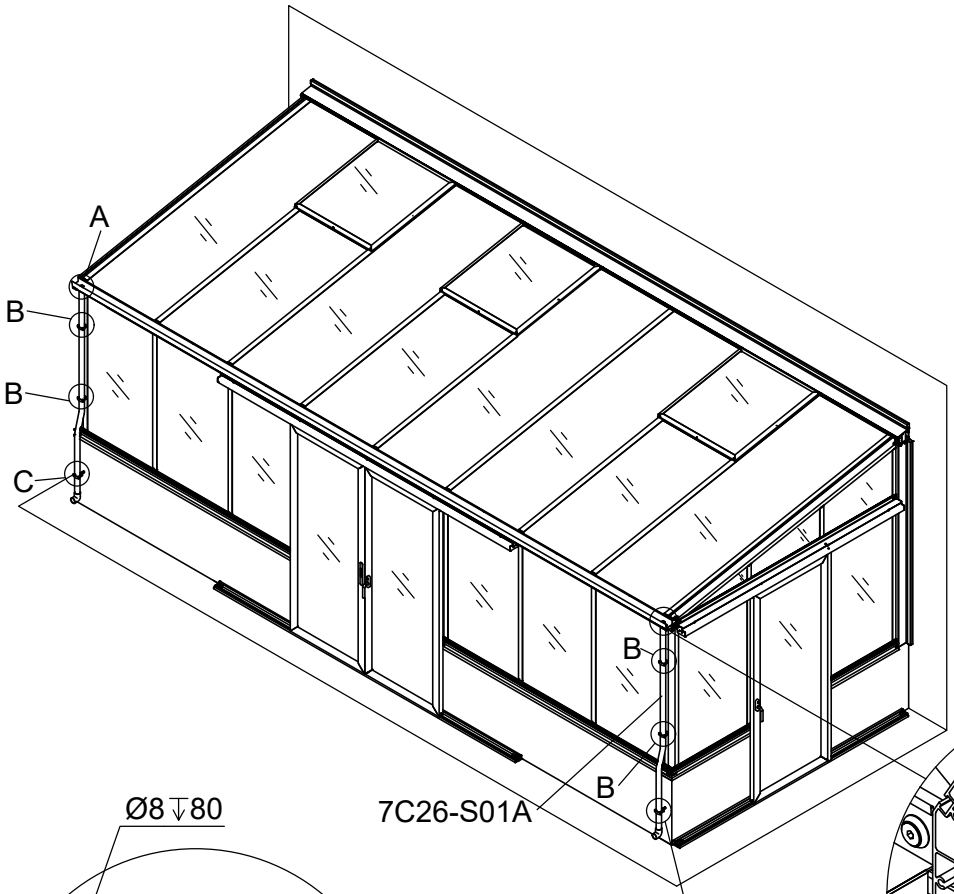

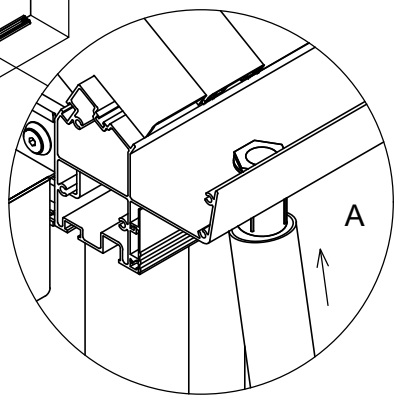

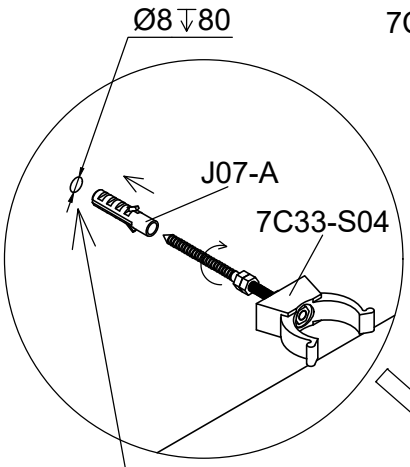

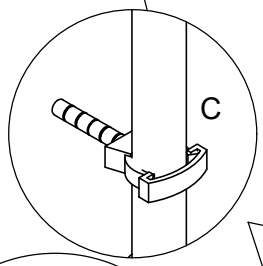

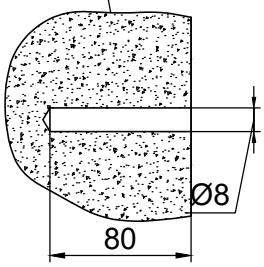

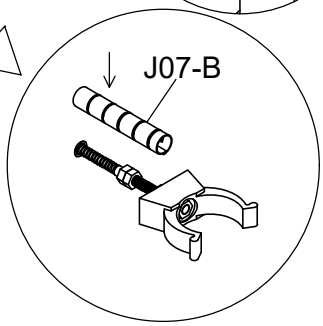

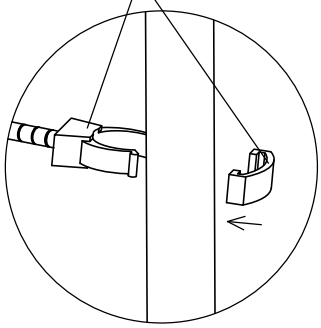

Part	NO.	QTY.	Length(MM)
	7B26-074	1	PCS
	7B26-073	1	PCS
	7C26-039	2	PCS
	Za4.2-13	10	PCS

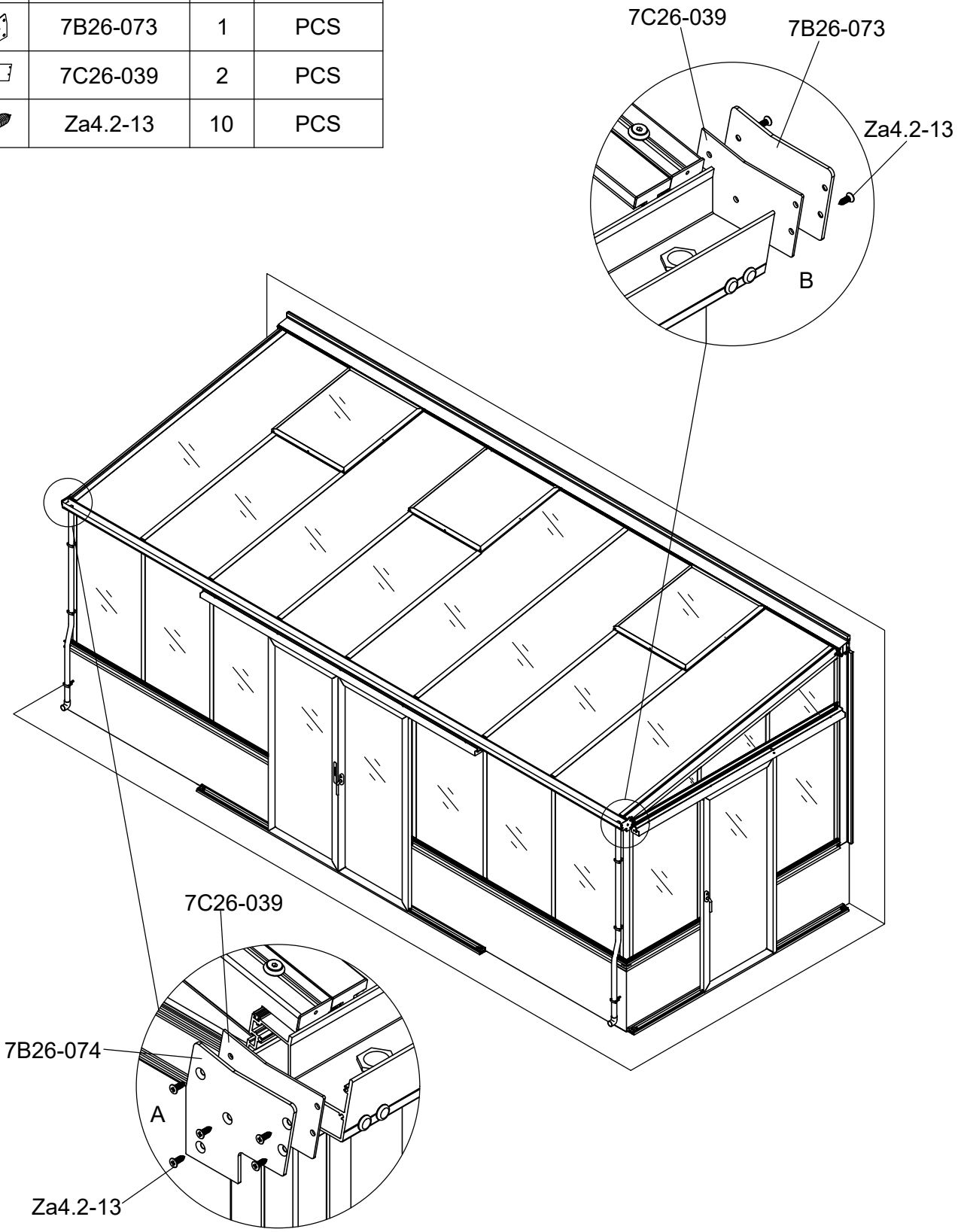

Part	NO.	QTY.	Length(MM)
	7B26-076	1	PCS
	7B26-075	1	PCS
	7C26-040	2	PCS
	Za4.2-13	8	PCS

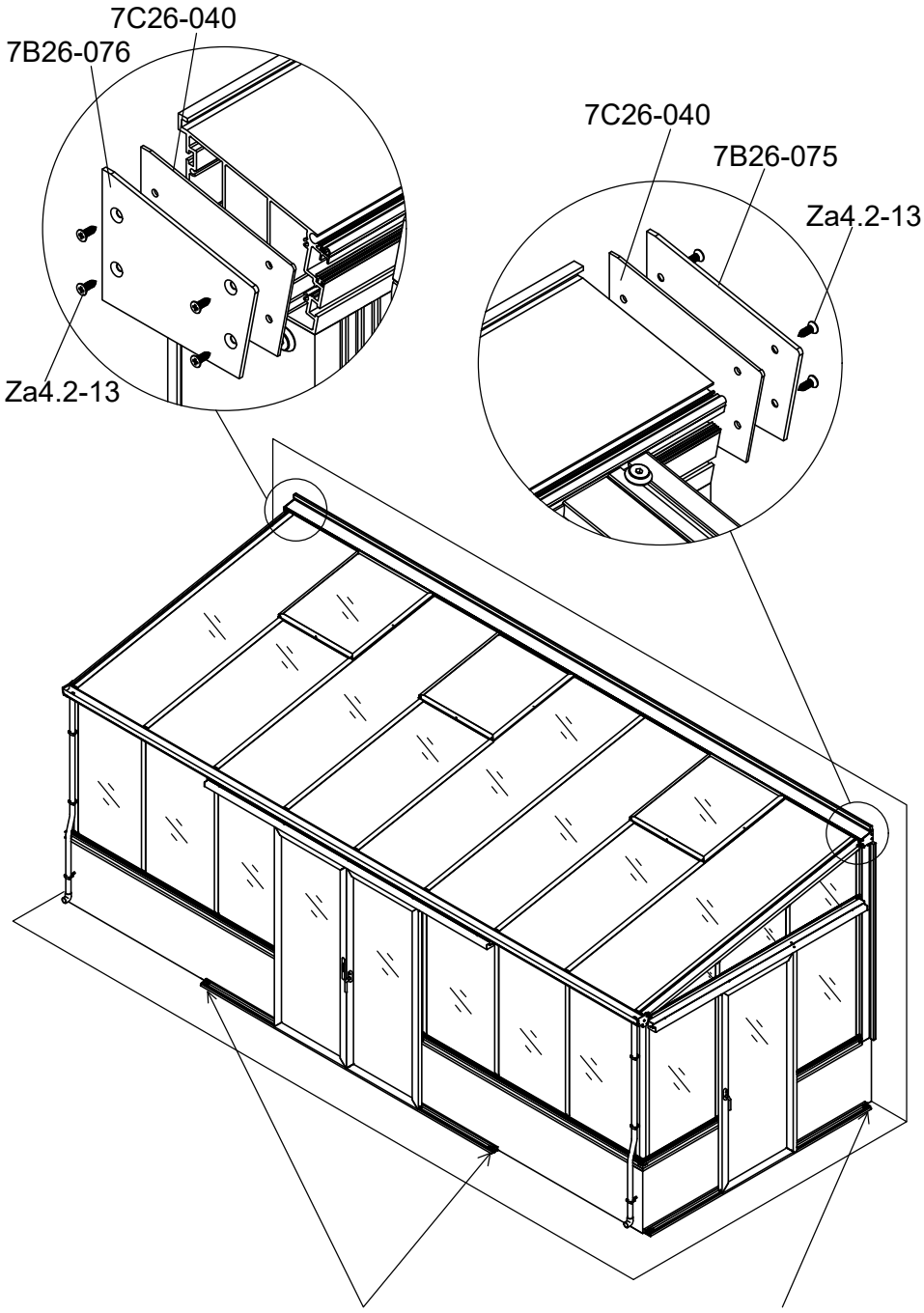

3172	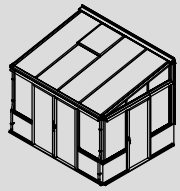
3173	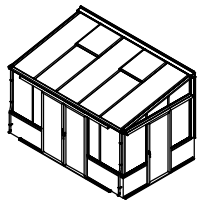
3174	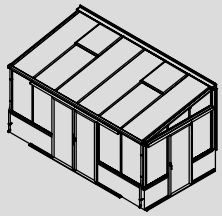
3175	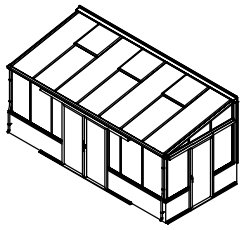
3176	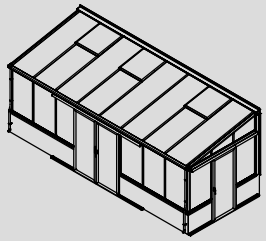

Adjust these door stoppers sideways if you want to open the door larger.
Justera avstånden av dörrstoppen i sidled om ni vill kunna öppna dörrarna ännu mer.
Justere dørstoppene sidelæns, for at give større åbning af døren.
Juster avstanden av dørstopperen sideveis om du vil kunne åpne døren ennå mer.
Säädä liukuovien stoppareiden etäisyys sivusuunnassa, mikäli haluat ovien avautuvan enemmän.
Stellen Sie den Türstopper seitlich ein, wenn Sie die Tür größer öffnen möchten.

Part	Product	NO.	Length(MM)	CTN NO.	Code
	3172	40A-Y13R	854	3043PA-S-4	
	3173	50A-Y13R	1230	3171P-S-5D	
	3174	40A-S11-6R	1605	3171P-S-6D	A009
	3175	40A-S11-7R	1981	3171P-S-7D	
	3176	40A-S11-8R	2356	3171P-S-8D	
	3172	40A-Y13L	854	3043PA-S-4	
	3173	50A-Y13L	1230	3171P-S-5D	
	3174	40A-S11-6L	1605	3171P-S-6D	A010
	3175	40A-S11-7L	1981	3171P-S-7D	
	3176	40A-S11-8L	2356	3171P-S-8D	

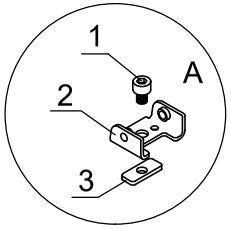

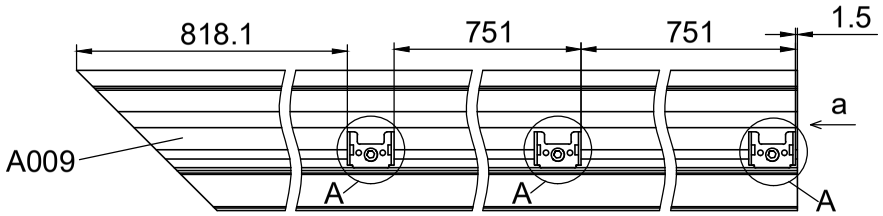

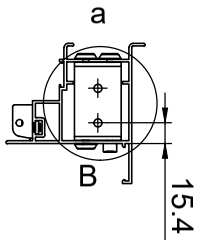

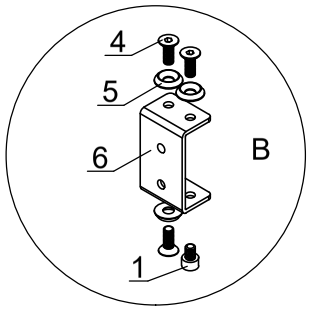

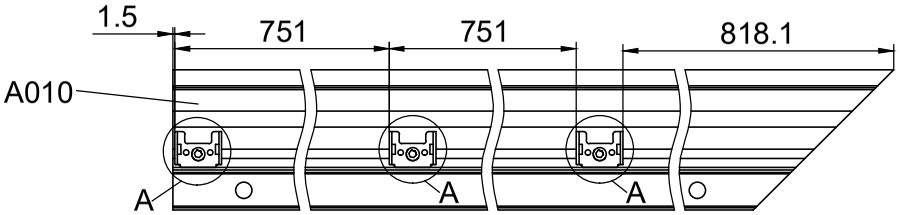

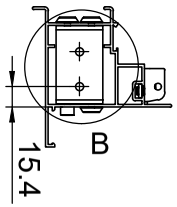

F1

NO.	
1	M6-8
2	7B26-011
3	7B26-025
4	Si6-16
5	J05
6	7B26-037A

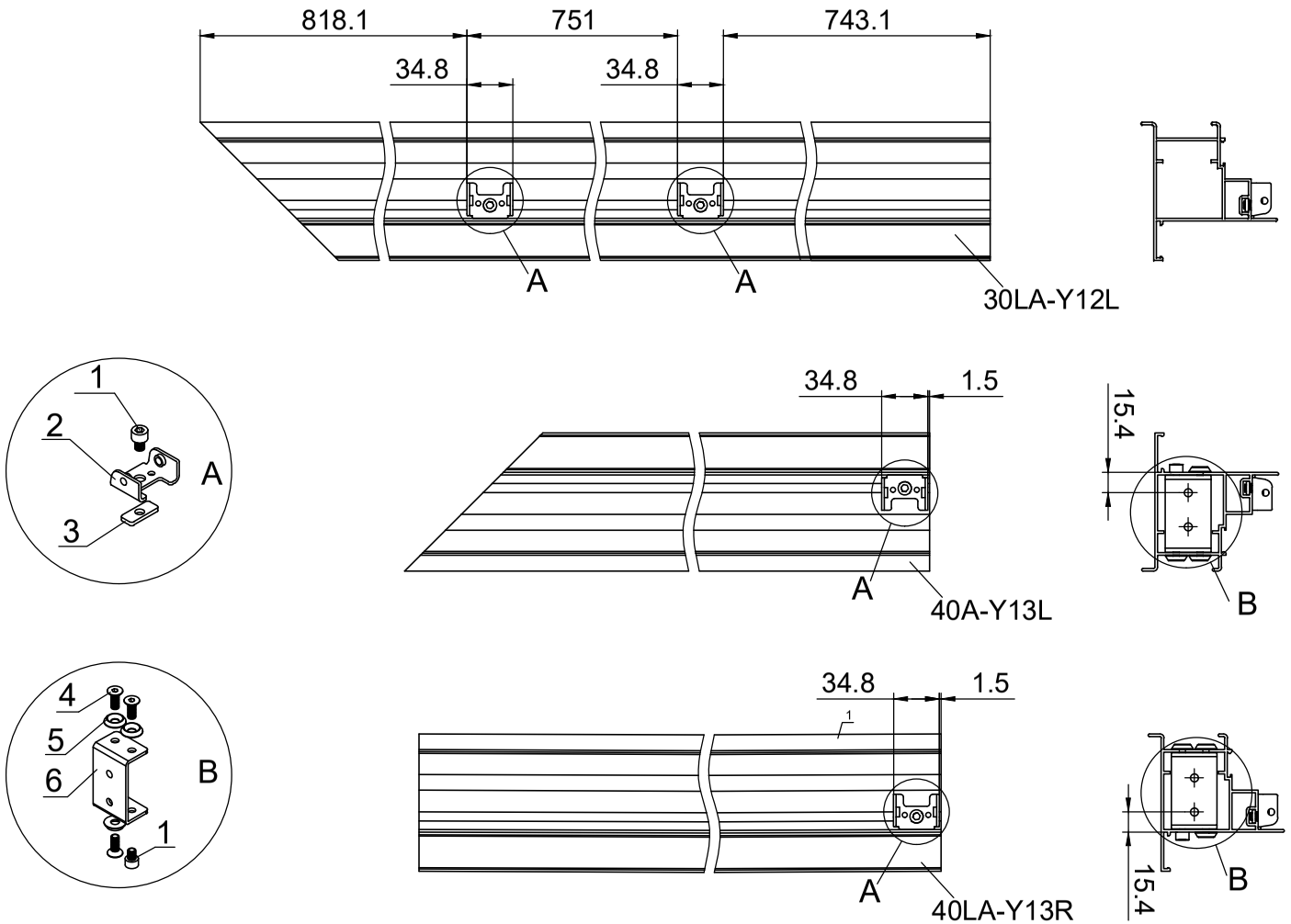

NO.	
1	M6-8
2	7B26-011
3	7B26-025
4	Si6-16
5	J05
6	7B26-037A

F2

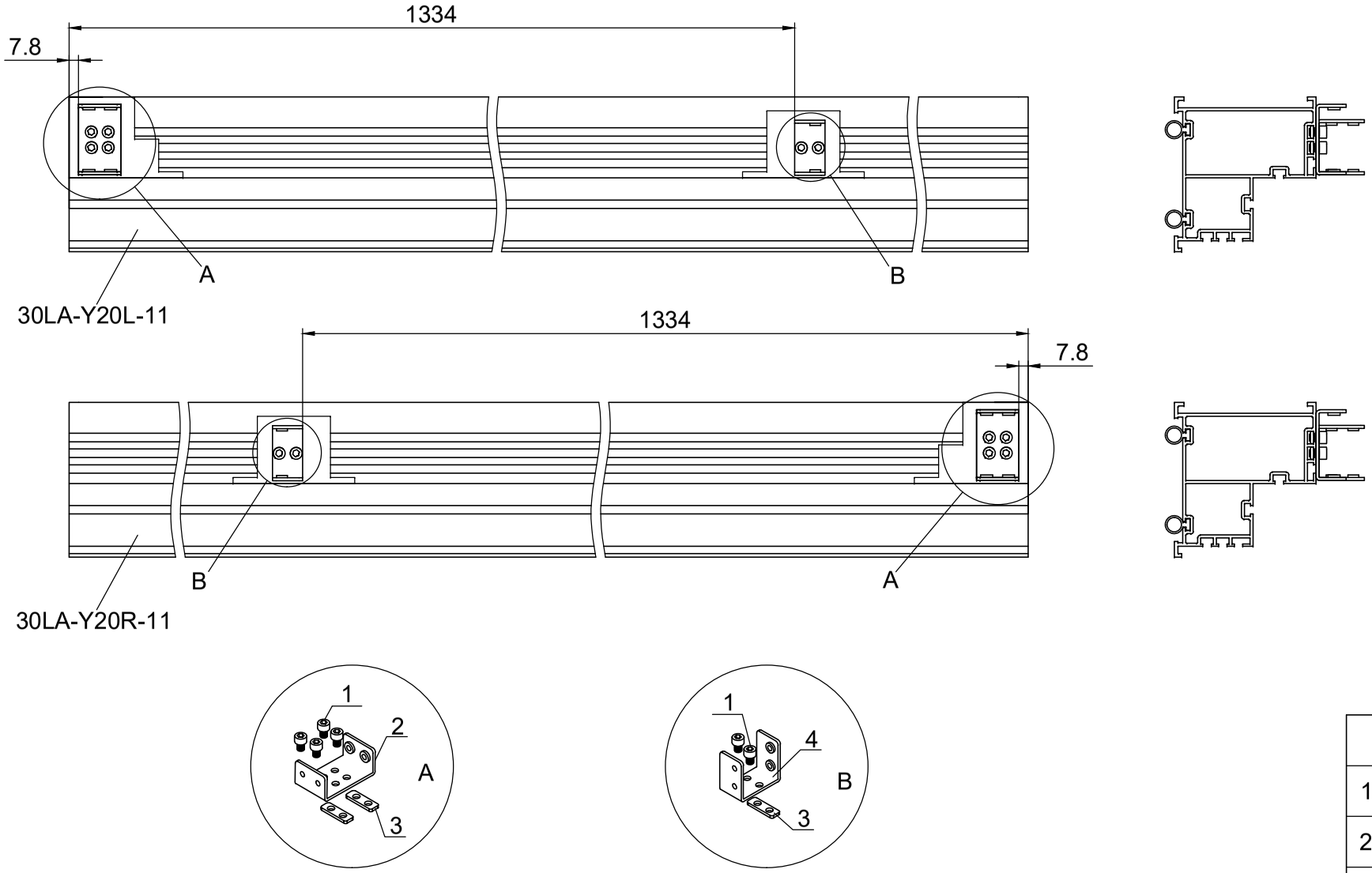

NO.	
1	M6-10
2	7B26-082
3	7B26-033
4	7B26-057

F3

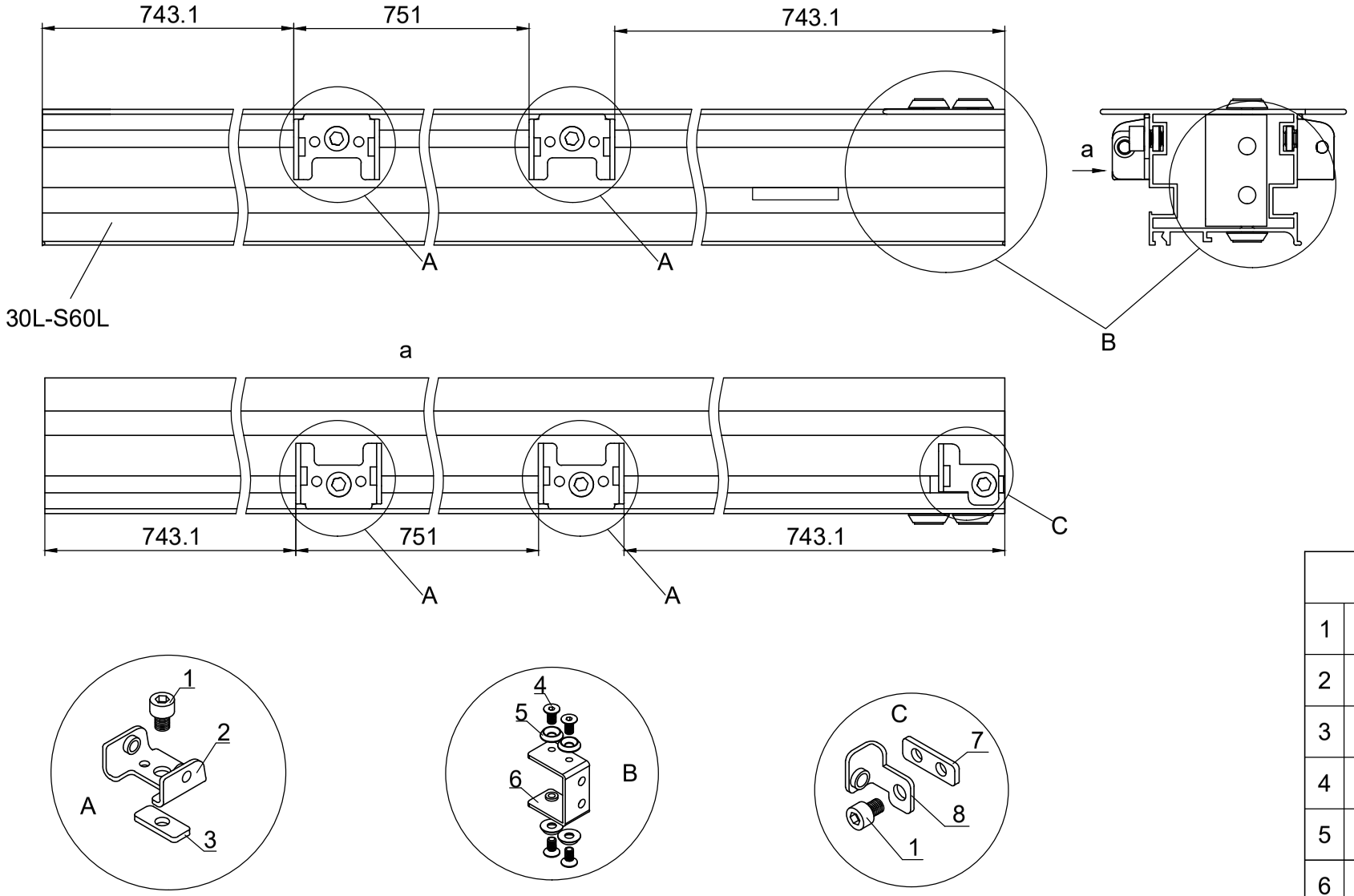

NO.	
1	M6-8
2	7B26-011
3	7B26-025
4	Si6-12
5	J05
6	7B26-056
7	7B26-033
8	7B26-027

F4

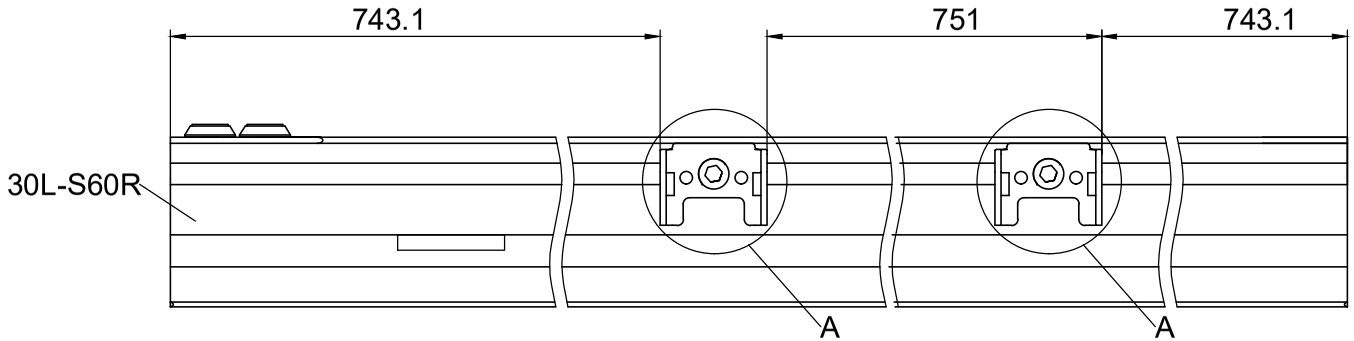

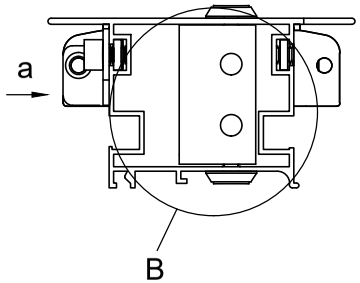

a

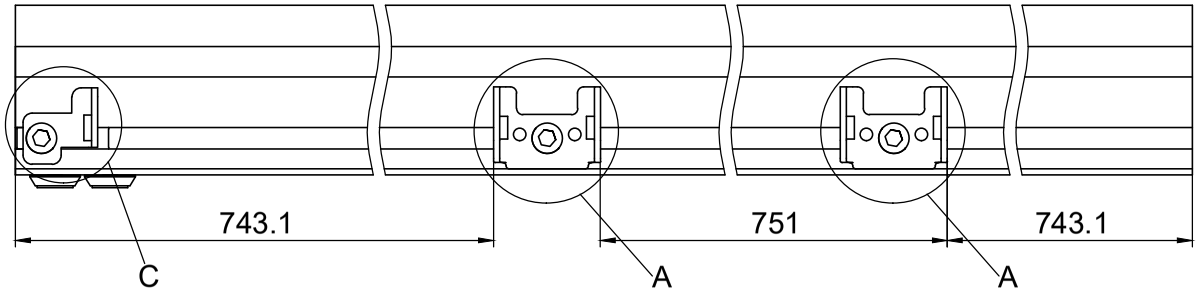

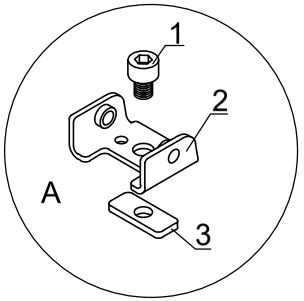

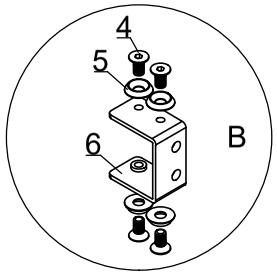

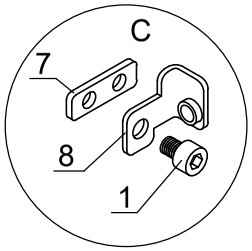

NO.	
1	M6-8
2	7B26-011
3	7B26-025
4	Si6-12
5	J05
6	7B26-056
7	7B26-033
8	7B26-026

F5

Part	Product	NO.	Length(MM)	Code
	3172	40L-Y62-4-11	3134	A003
	3173	40L-Y62-5-11	3885	
	3174	40L-Y62-6-11	4636	
	3175	40L-Y62-7-11	5387	
	3176	40L-Y62-8-11	6138	

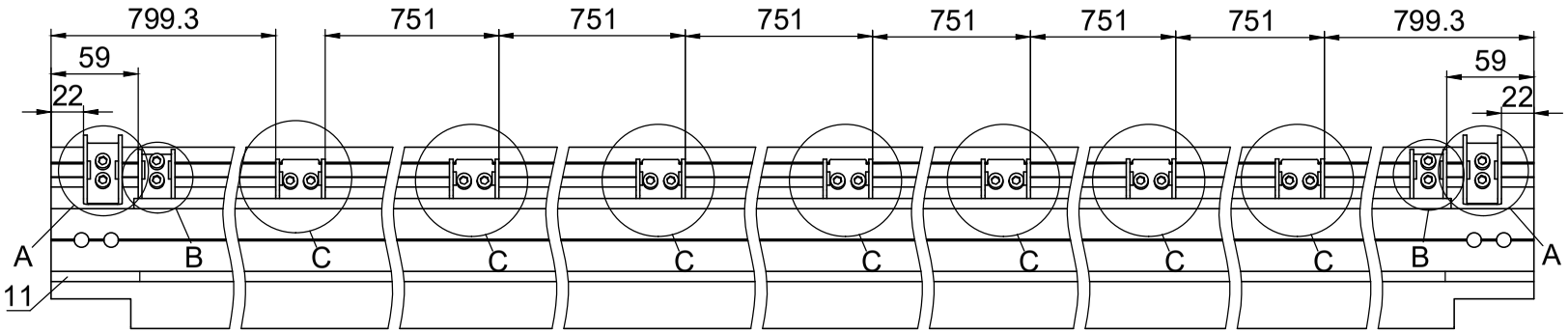

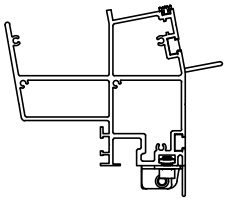

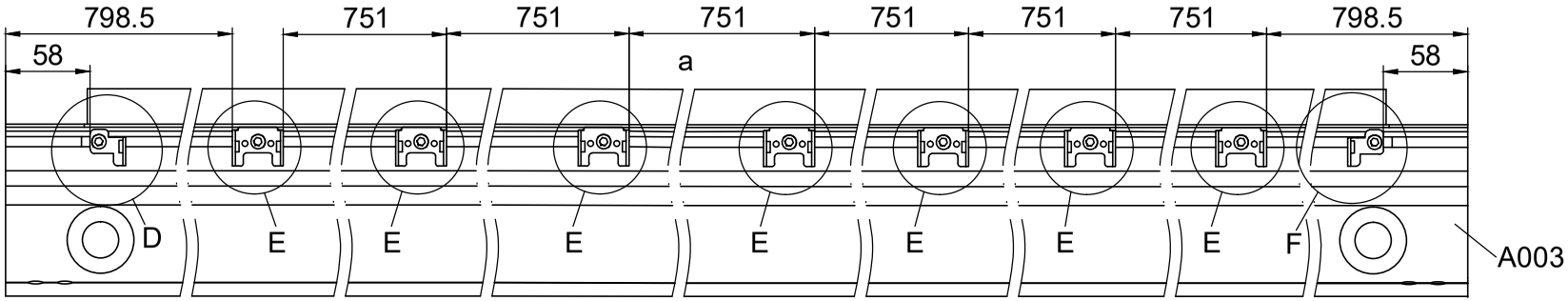

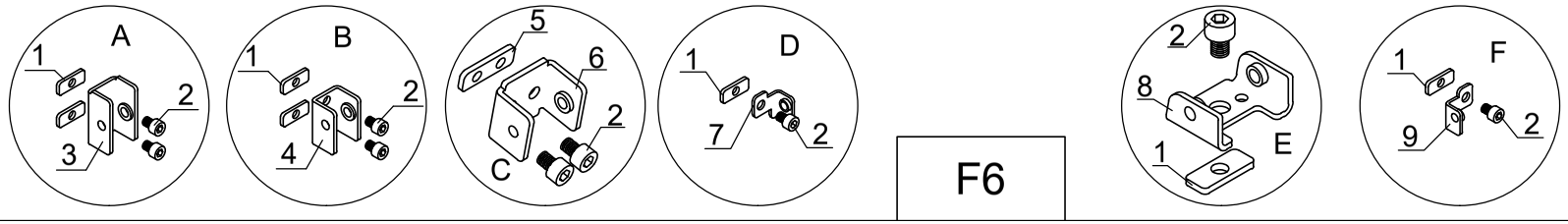

F6

	NO.
1	7B26-025
2	M6-8
3	7B26-086
4	7B26-087
5	7B26-033
6	7B26-062
7	7B26-027
8	7B26-011
9	7B26-026

Part	Product	NO.	Length(MM)	Code
	3172	40LA-Y63-4-11	3157	A004
	3173	40LA-Y63-5-11	3908	
	3174	40LA-Y63-6-11	4659	
	3175	40LA-Y63-7-11	5410	
	3176	40LA-Y63-8-11	6161	

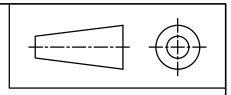

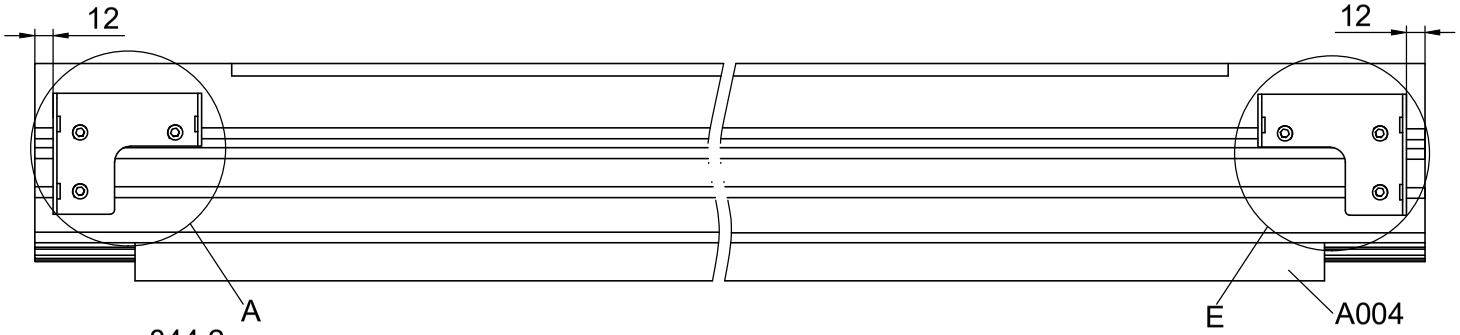

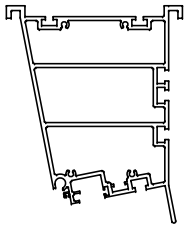

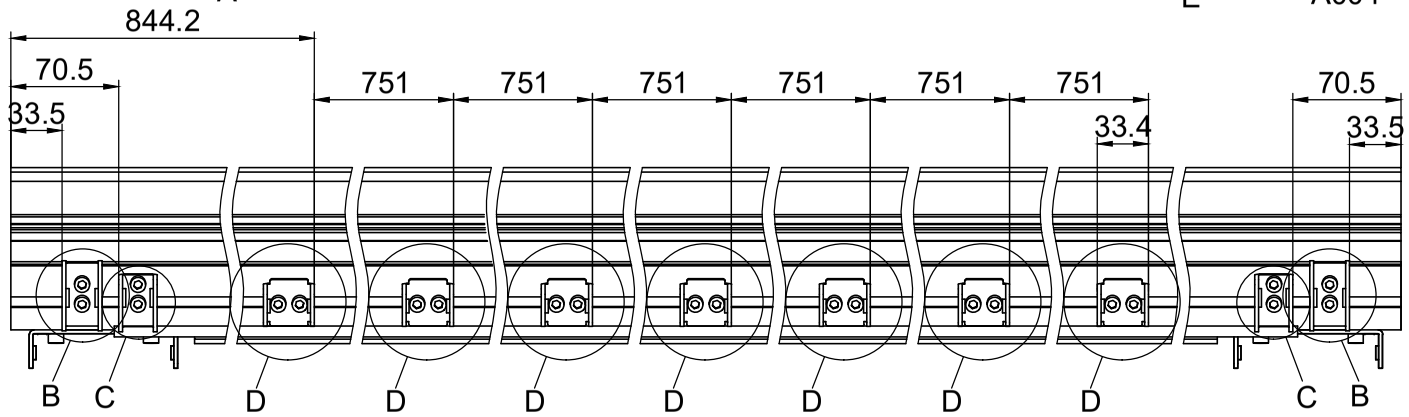

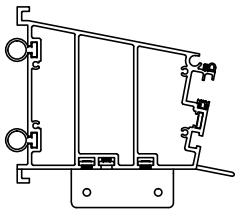

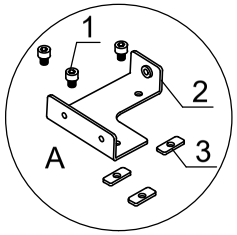

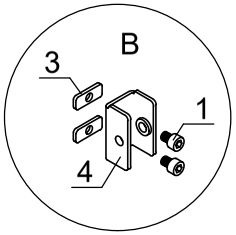

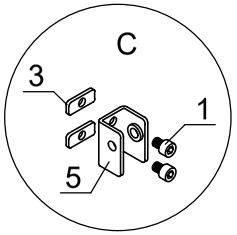

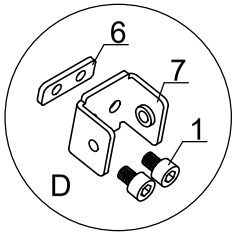

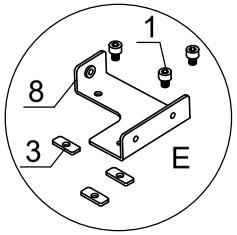

F7

NO.	
1	M6-10
2	7B26-081
3	7B26-025
4	7B26-087
5	7B26-086
6	7B26-033
7	7B26-062
8	7B26-080

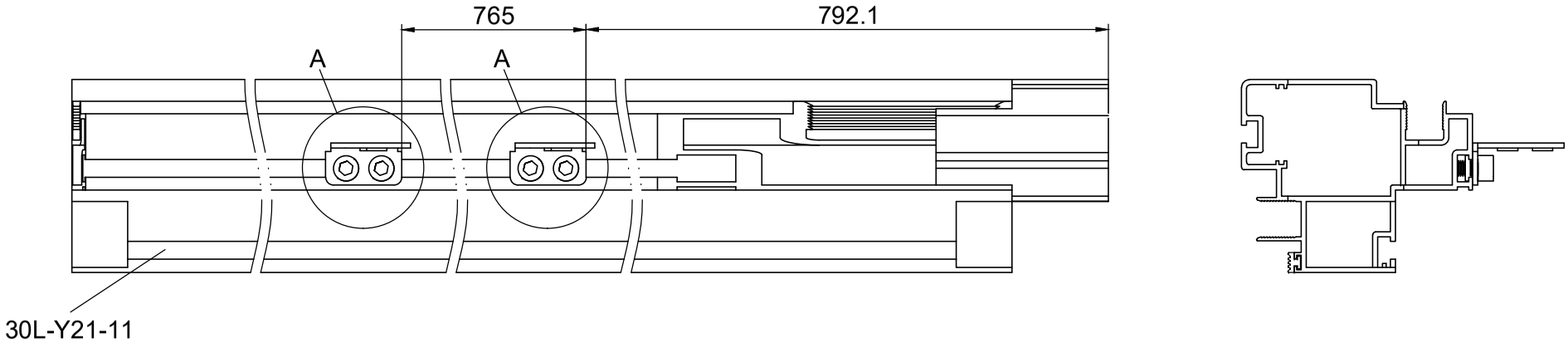

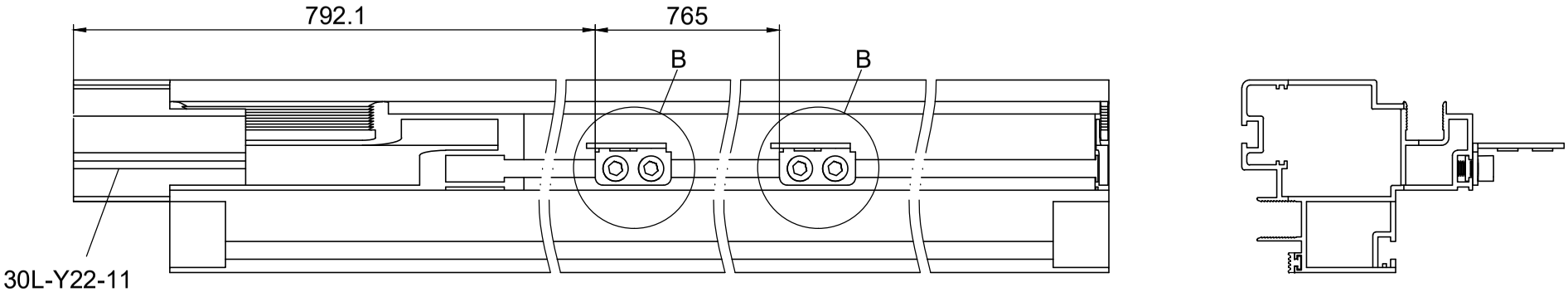

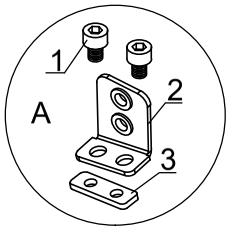

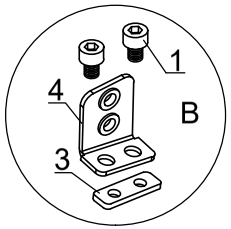

F8

NO.	
1	M6-8
2	7B26-046R
3	7B26-033
4	7B26-046L

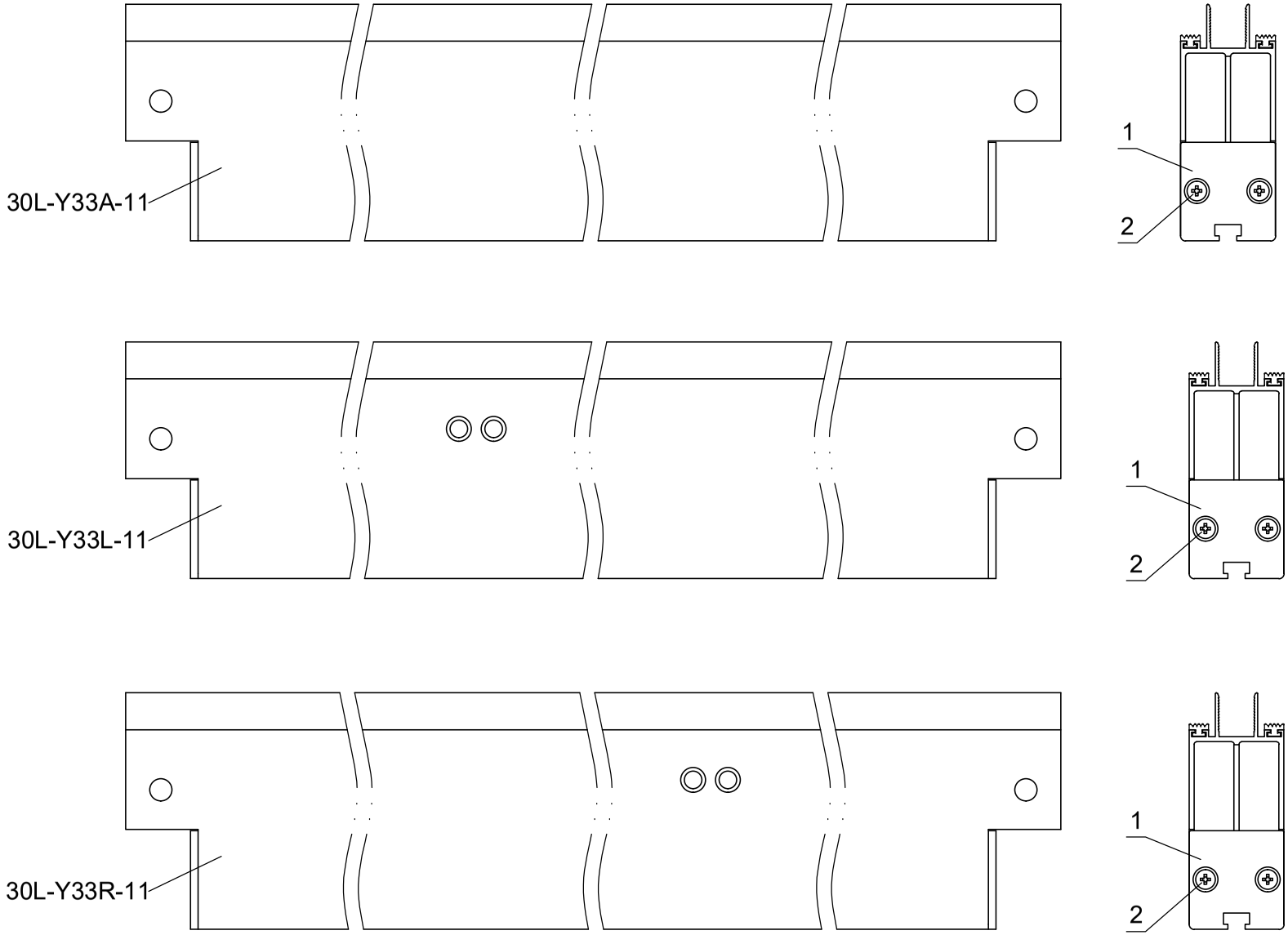

NO.	
1	7B26-071
2	Za4.2-13

F9