Green Room®

BY WILLAB GARDEN

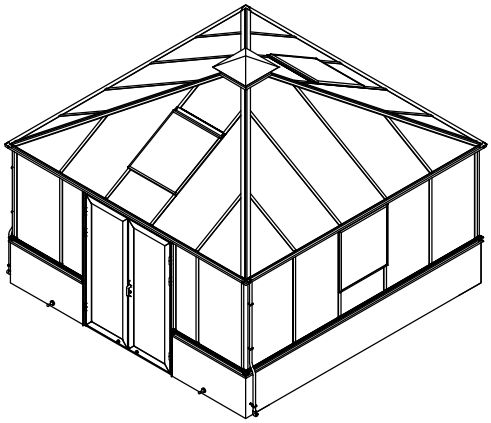

3034-HD
Product size (L×W×H):389×389×325cm

Please read carefully before assembling
Two people are needed

3034-HD
Storlek (L×B×H):389×389×325cm

Läs noggrant innan montering.
Det krävs två personer för montering.

3034-HD
Størrelse (L×B×H):389×389×325cm

Læs venligst omhyggeligt, før montering.
Der kræves to personer til montering.

3034-HD
Størrelse (L×B×H):389×389×325cm

Les monteringsanvisningen nøye innen montering.
Det kreves to personer for montering.

3034-HD
Koko (P×L×K):389×389×325cm

Lue ohjeet huolellisesti läpi ennen asentamista.
Asentamiseen tarvitaan kaksi henkilöä.

3034-HD
Produktgröße (L×B×H):389×389×325cm

Bitte vor dem Aufbau sorgfältig lesen.
Zwei Personen werden benötigt.

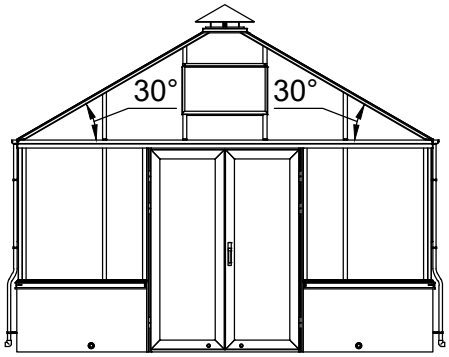

230130

Part	NO.	QTY.	Length(MM)	Page
	30A-Y20	4	1236	P3
	30X-Y61-5	1	3889	P3
	30X-Y60-5	1	3889	P3
	30X-Y62-5NR	1	3889	P3
	30X-Y62-5NL	1	3889	P3
	40A-Y30	12	1235	P5
	40A-Y30R	2	1235	P5
	40A-Y30L	2	1235	P5
	40X-Y34B	6	713	P5~7
	30X-Y63	4	432	P6
	30X-Y63-B	4	290	P6
	30X-Y21-5	4	2702	P6
	30X-Y32L-5	2	1711	P6~7
	30X-Y31R-5	4	844	P6~7
	30X-Y31L-5	4	844	P6~7
	30X-Y33R-5	2	1711	P7
	30X-Y33L-5	2	1711	P7
	30X-Y32R-5	2	1711	P7
	40A-Y01	22	1235	P10
	40A-Y02	2	1235	P10
	40X-Y07	4	712	P10~12
	30X-Y03R-5	2	1750	P12
	30X-Y03L-5	2	1750	P12
	30X-Y05R-5	2	1750	P12
	30X-Y05L-5	2	1750	P12
	30X-Y04R-5	4	883	P12
	30X-Y04L-5	4	883	P12
	30X-Y07	2	712	P12
	30X-Y08R-5	4	2673	P12
	30X-Y08L-5	4	2673	P12

Part	NO.	QTY.	Length(MM)	Page
	30X-Y63-A	4	452	P13
	30X-Y80E-A	2	801	P23
	40X-Y81E	8	882	P23~24
	40X-Y82E	2	801	P23
	30X-Y80E-B	2	801	P24
	30X-Y82E	2	801	P24
	30X-Y62-A	2	860	P25
	30X-Y34-A	2	790	P25

Part	NO.	QTY.	Length(MM)	Page
	7B26-025	8	PCS	P2
	W06	20	46	P2~24
	PS8-80	16	PCS	P2
	J09	40	PCS	P2~24
	7B26-017	4	PCS	P3
	M6-8	48	PCS	P3~7
	J08	1	PCS	P3~25
	L06	8	1400	P3
	Si6-16	132	PCS	P3~7
	J05	140	PCS	P3~7
	7B26-018	8	PCS	P3~6
	W05	4	27	P4
	Si6-12	8	PCS	P4
	7B26-033	8	PCS	P4
	Si5-16	24	PCS	P5~7
	7C28-004	54	PCS	P5~25
	W02	4	22	P6
	S6-10	16	PCS	P6~22
	Mi8	20	PCS	P6~22
	S8-12	20	PCS	P6~22
	Z4.2-13	46	PCS	P7~27
	7B26-016	4	PCS	P21
	M4-10	16	10	P21
	7B26-023	4	PCS	P22
	Mi6	16	PCS	P22
	7B26-022	4	PCS	P22
	Mi8A	4	PCS	P22
	W04	16	PCS	P23~24
	Z4.2-38	8	PCS	P25
	J11	4	PCS	P25

Part	NO.	QTY.	Length(MM)	Page
	T07	8	PCS	P26
	T03R	2	PCS	P27
	T03L	2	PCS	P27
	T02A	2	PCS	P27
	M5-35	4	PCS	P27
	7C33-S02	2	PCS	P29
	7C33-S03	4	PCS	P30
	Z4.8-25	4	PCS	P30
	7C33-S04	2	PCS	P30
	J07-A	2	PCS	P30
	J07-B	2	PCS	P30
	7B26-024	1	PCS	P22
	7C26-S01A	2	1900	P30
	7C26-007N	15M		P11
	7C26-009A	1.2M		P13
	MCJT002	14		P23~24
	TOOL-001	1	274	P2~30
	TOOL-002	1	80	P2~30
	TOOL-003A	1	2MM	P5~25
	TOOL-004A	1	3MM	P26
	TOOL-005	1	4MM	P3~18
	TOOL-006	1	5MM	P2~17

	Part	NO.	QTY.	Length(MM)	Page
3033P-S-BASE5 (2PCS)		40A-Y11-5	2	3924	P2
		40A-Y11-5A	2	3714	P2
		40X-Y15-5	2	3900	P9
		30X-Y62-BN	4	1512	P28

	Part	NO.	QTY.	Length(MM)	Page
3033P-S-5F		50A-Y12	1	3924	P2
		50A-Y12-A	1	3774	P2
		40X-Y15-5	1	3900	P9
		30X-Y62-BN	2	1512	P28
		30X-Y60-5AN	1	3887	P28

	Part	NO.	QTY.	Length(MM)	Page
3043PA-S-5		50A-Y13L	1	1230	P2
		50A-Y13R	1	1230	P2
		40A-S11-5AL	1	1125	P2
		40A-S11-5AR	1	1125	P2
		50A-Y13L-A	1	1155	P2
		50A-Y13R-A	1	1155	P2
		50A-Y15-L	1	1218	P9
		50A-Y15-R	1	1218	P9

	Part	NO.	QTY.	Length(MM)	Page
3000P-30X-Y60-5AN		30X-Y60-5AN	1	3887	P28

3040P-HD

Part	NO.	QTY.	Length(MM)	Page
	40A-Y101L	1	1910	P6
	40A-Y101R	1	1910	P6
	40A-Y108R	1	693	P14
	40A-Y106	2	1872	P14
	40A-Y107R	1	1872	P14
	40A-Y109R	1	693	P14
	40A-Y107L	1	1872	P14
	40A-Y115	2	766	P14
	40A-Y108L	1	693	P14
	40A-Y109L	1	693	P14
	40A-Y110	4	1748	P15
	40A-Y111	4	569	P15
	40A-Y112	4	1754	P15
	40A-Y113	4	576	P15
	40A-Y114	1	1817	P15
	40A-Y102L	1	1910	P17
	40A-Y102R	1	1910	P17
	40A-Y103	1	1380	P18
	40A-Y104	1	1380	P18
	40A-Y105	1	1380	P18

Part	NO.	QTY.	Length(MM)	Page
	7C26-031	2	PCS	P6
	Si6-25	8	PCS	P6
	J05	8	PCS	P6
	PSJ8-50	2	PCS	P6
	DQ6-12	2	PCS	P6
	SW6-50	2	PCS	P6
	W07	8	37	P14
	W04	8	PCS	P14
	T19	2	PCS	P14
	40X-Y91-A3	1	PCS	P14
	Z3.5-25	2	PCS	P14
	Z4.2-38	4	PCS	P15
	7C28-004	4	PCS	P15
	T11R-1	3	PCS	P16~19
	T11R-2	3	PCS	P16~19
	T11L-1	3	PCS	P16~19
	T11L-2	3	PCS	P16~19
	Ma6-12	8	PCS	P17~18
	M6	8	PCS	P17~18
	7C33-001	8	PCS	P17
	M6-35	8	PCS	P17
	My6-30	8	PCS	P17
	7B26-122	2	PCS	P18
	My6-10	4	PCS	P18
	Si5-16	2	PCS	P18
	T16	1	PCS	P20
	Mc5-35	2	PCS	P20
	T14	1	PCS	P20
	T15	1	PCS	P20
	T21	2	PCS	P20
	J07-A	6	PCS	P20
	Za4.2-38	6	PCS	P20
	TOOL-003B	1	2.5MM	P14~19

Part	NO.	QTY.	Length(MM)	Page
	730×1262	15	1262	P8
	354×1262	2	1262	P8
	730×386	2	730	P8
	747×863	8	863	P12
	730×1730	8	1730	P12
	730×2005	2	2005	P12
	730×615	2	730	P12
	730×468	2	730	P12
	539×1718	2	1718	P15
	782×863	4	863	P23~24

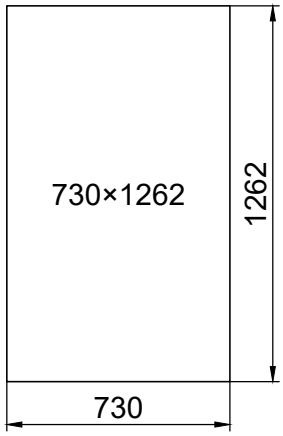

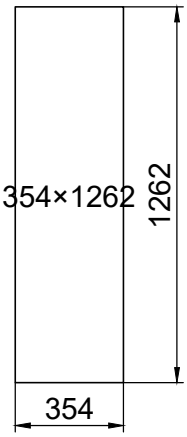

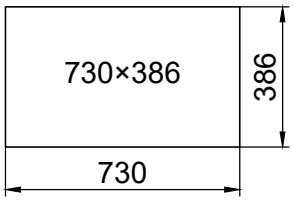

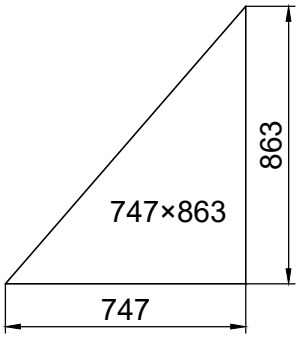

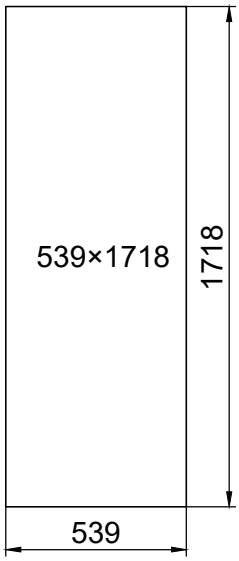

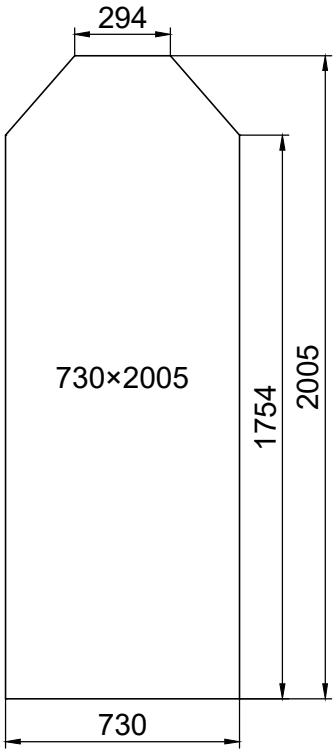

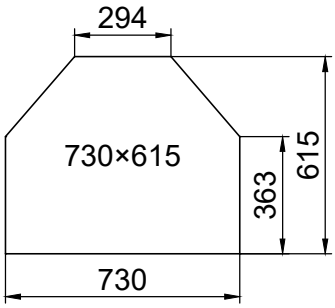

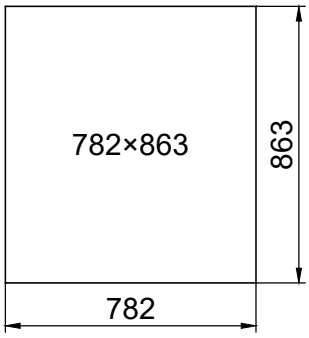

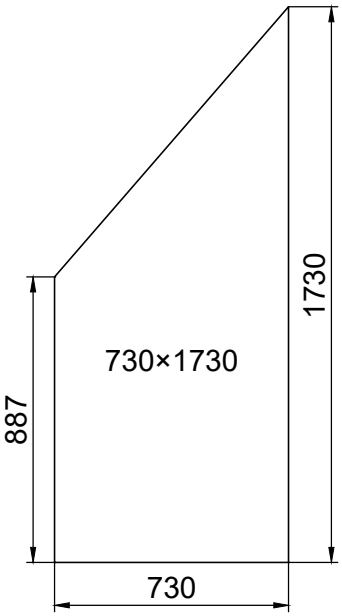

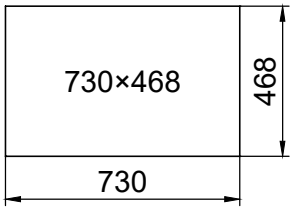

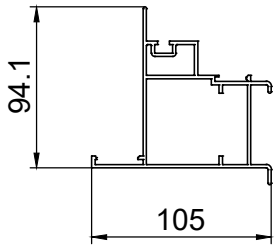

Sealing should be done to prevent frost from destroying the wall. The sealant between the wall and foundation of the greenroom is provided and handled by customers themselves.

Tätning bör göras för att muren ej skall frostsprängas. Tätning mellan mur och sockel står kunden själv för.

Tætningen bør gøres for at forhindre frostsprængninger i muren. Tætningen mellem mur og aluminiumprofil står kunden selv for

En tetning bør lages for å hindre frostsprengning av muren. Tetning mellom mur og sokkel ordnes av kunden selv

Tiivistys täytyy tehdä, jotta muuri ei hajoa pakkasella. Tiiviste muurin ja sokkelin välissä täytyy asiakkaan hoitaa itse

Die Abdichtung sollte erfolgen, um zu verhindern, dass der Frost die Wand zerstört. Die Abdichtung zwischen der Wand und dem Fundament des Greenrooms wird vom Kunden selbst besorgt und durchgeführt.

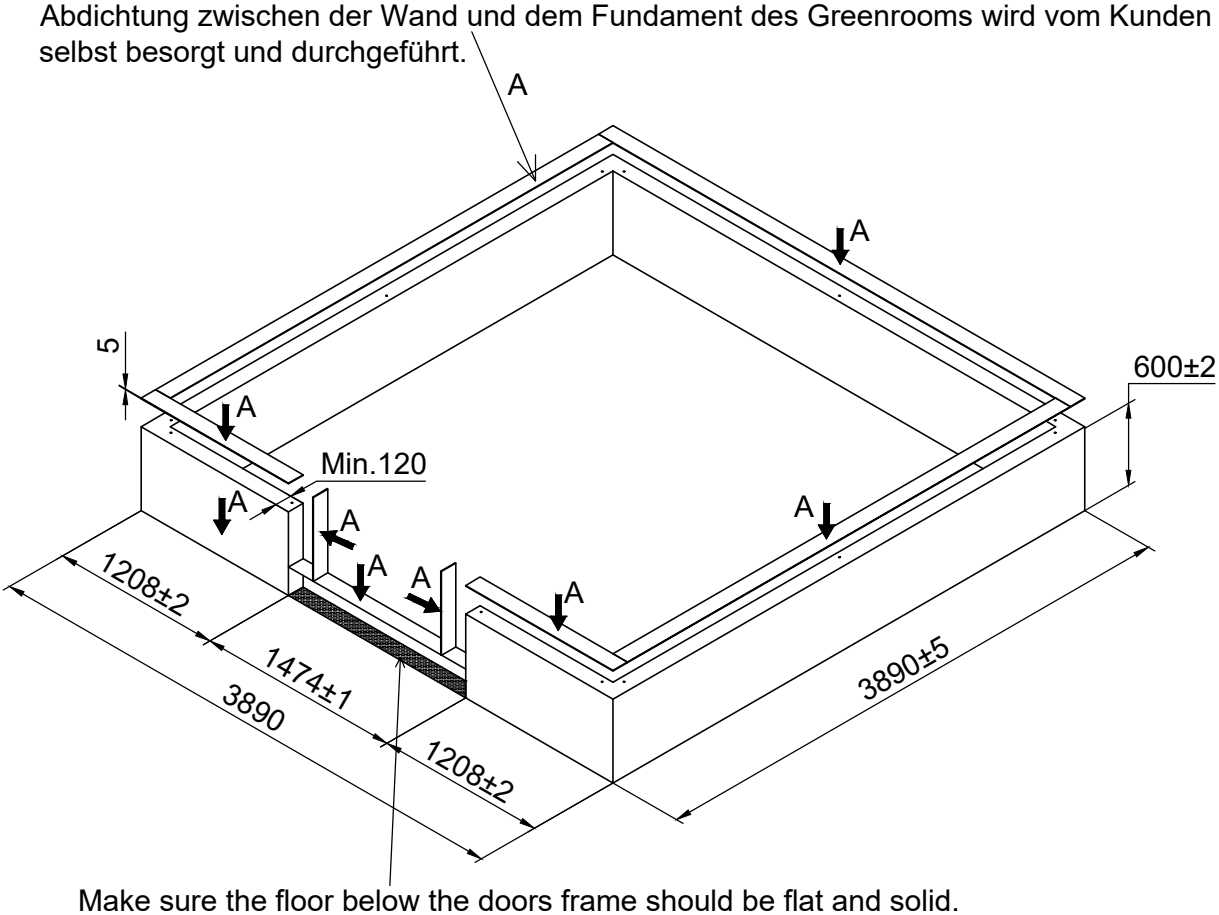

Make sure the floor below the doors frame should be flat and solid.
Se till att underlaget under dörrramen är plan och på solid grund.
Sørg for, at underlaget under dørkarmen er plan og på fast grund.
Sørg for at underlaget under dørterskelen er slett og på solid fundament.
Tarkista, että maa ovikarmin alla on sileä ja tasainen.
Achten Sie darauf, dass der Boden unter dem Türrahmen eben und fest ist.

Part	NO.	QTY.	Length(MM)	CTN NO.
	40A-Y11-5	2	3924	3033P-S-BASE5
	50A-Y12	1	3924	3033P-S-5F
	50A-Y13R	1	1230	3043PA-S-5
	50A-Y13L	1	1230	3043PA-S-5
	7B26-025	8	PCS	
	W06	4	46	

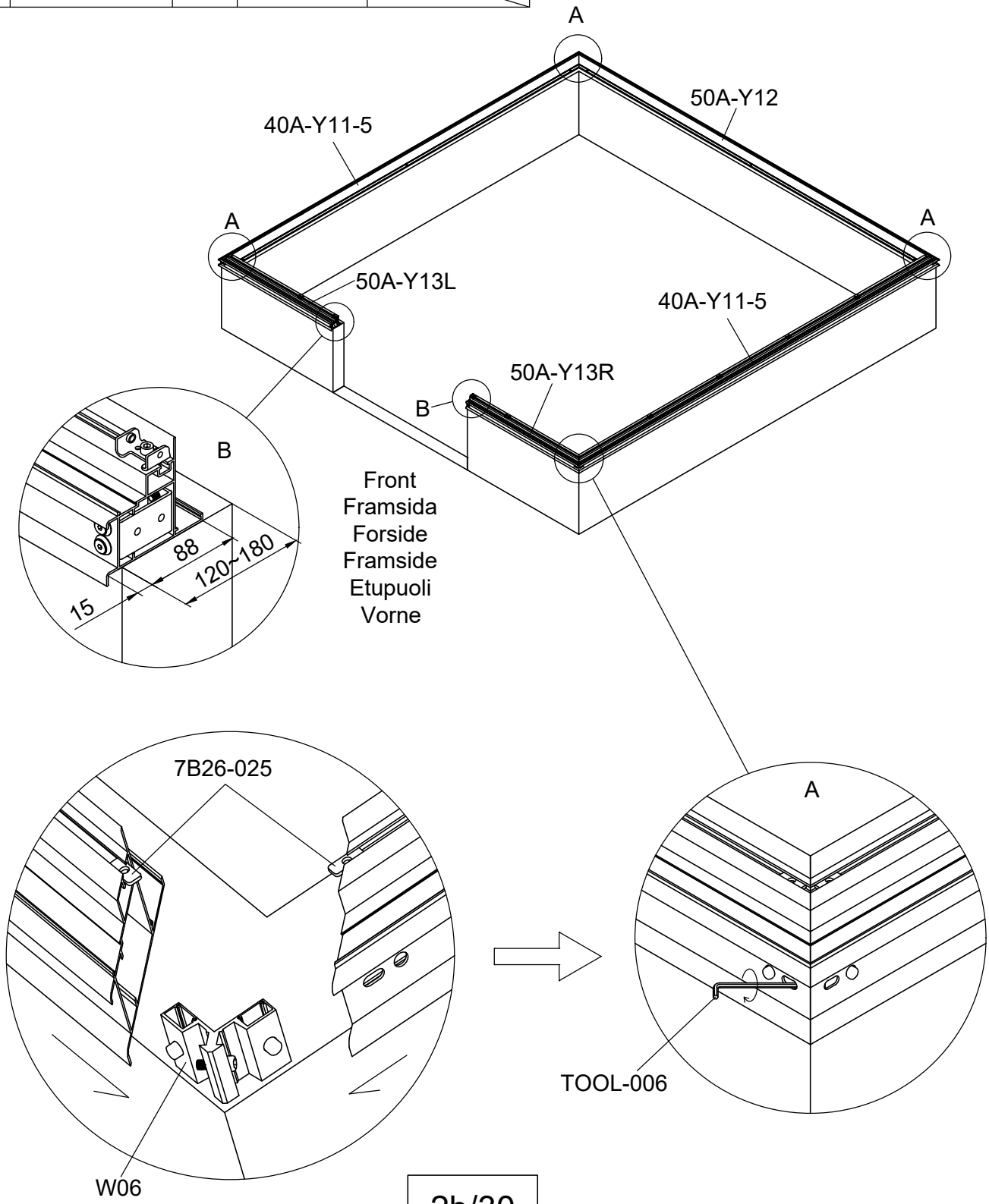

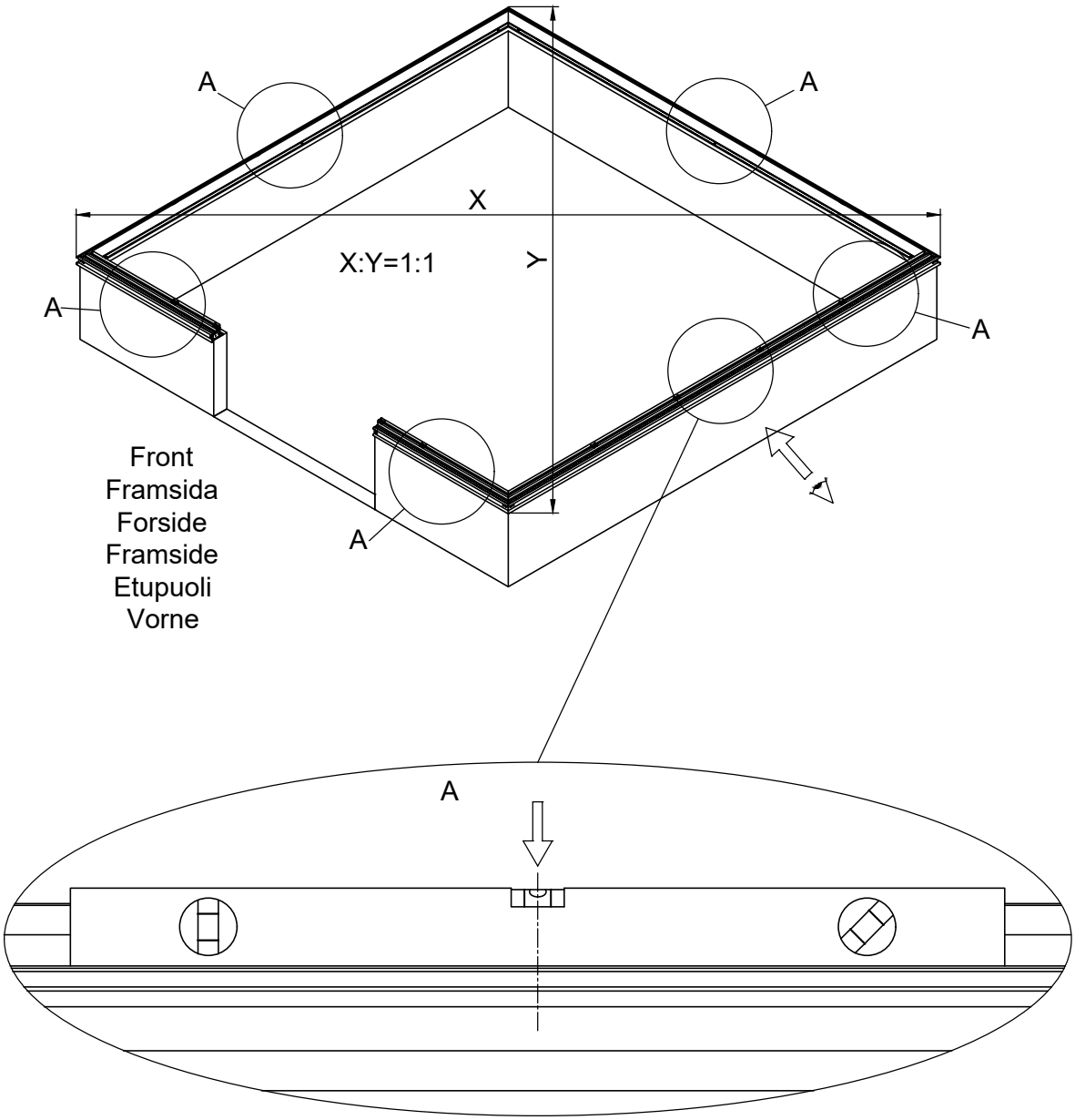
A
A
X
X:Y=1:1
Y
A
A
A
Front
Framsida
Forside
Framside
Etupuoli
Vorne
A

Part	NO.	QTY.	Length(MM)
	PS8-80	13	PCS

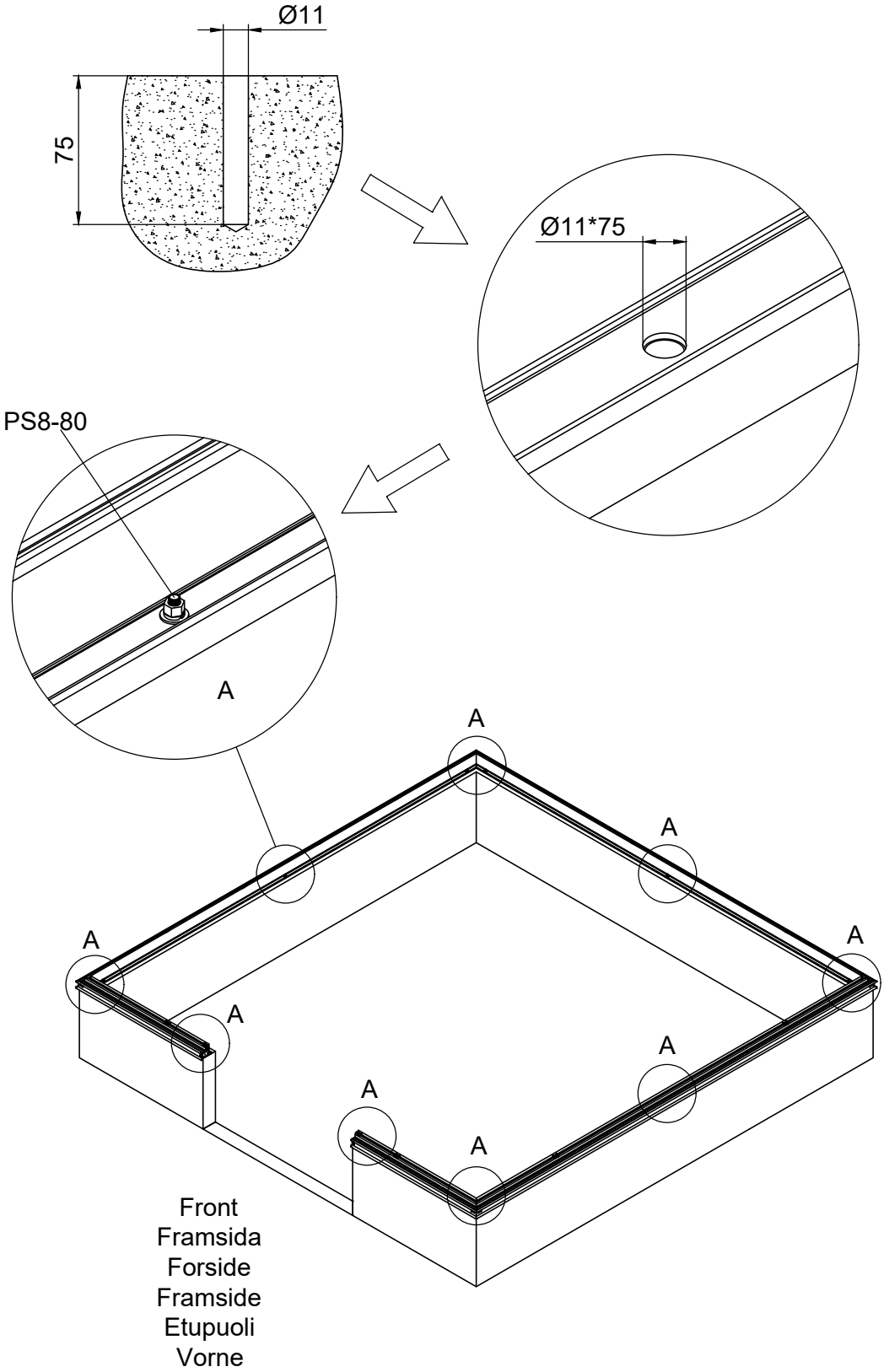

Part	NO.	QTY.	Length(MM)	CTN NO.
	40A-Y11-5A	2	3714	3033P-S-BASE5
	50A-Y12-A	1	3774	3033P-S-5F
	50A-Y13R-A	1	1155	3043PA-S-5
	50A-Y13L-A	1	1155	3043PA-S-5
	J09	8	PCS	

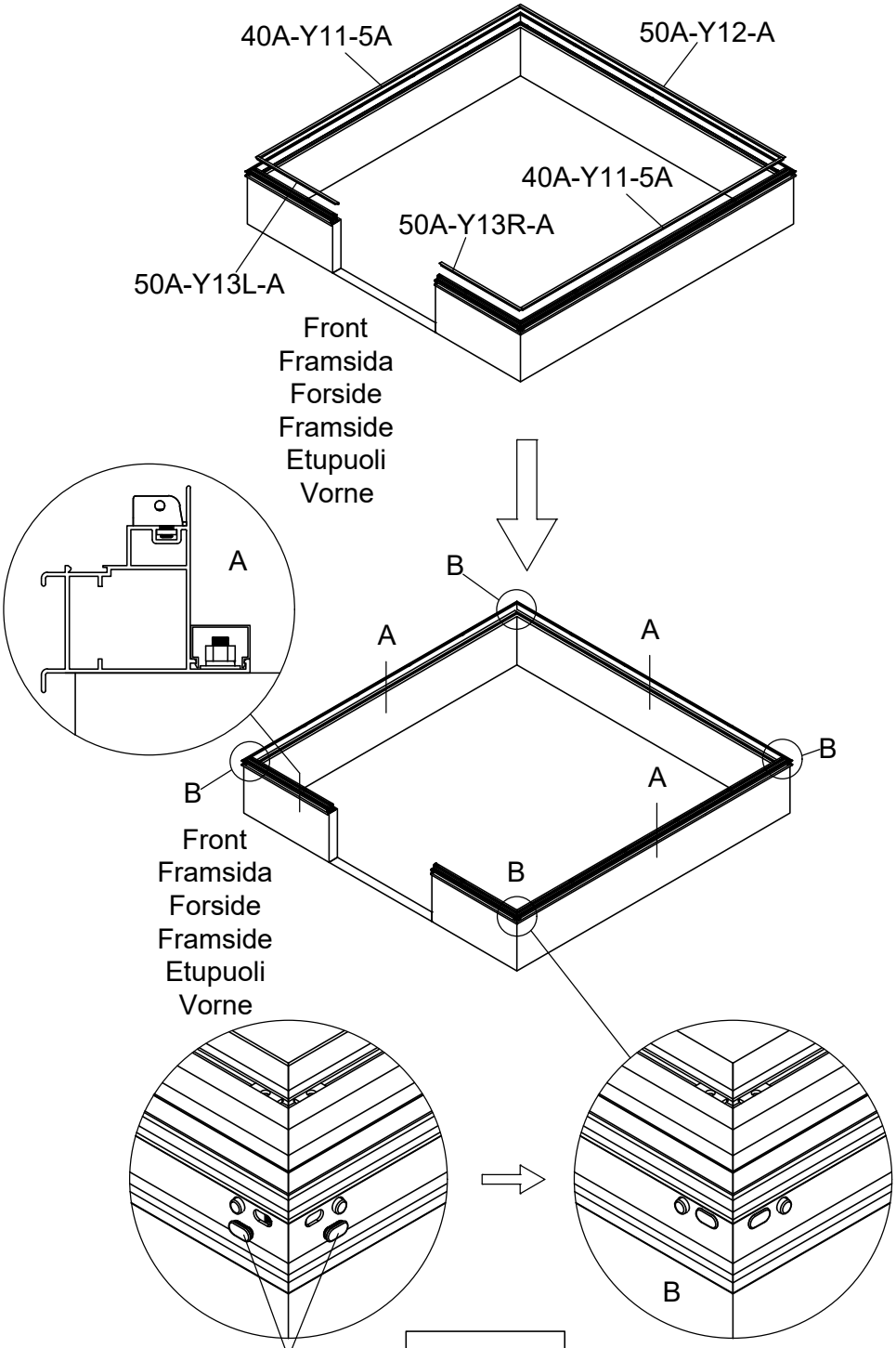

Part	NO.	QTY.	Length(MM)
	7B26-017	4	PCS
	M6-8	8	PCS
	J08	1	PCS

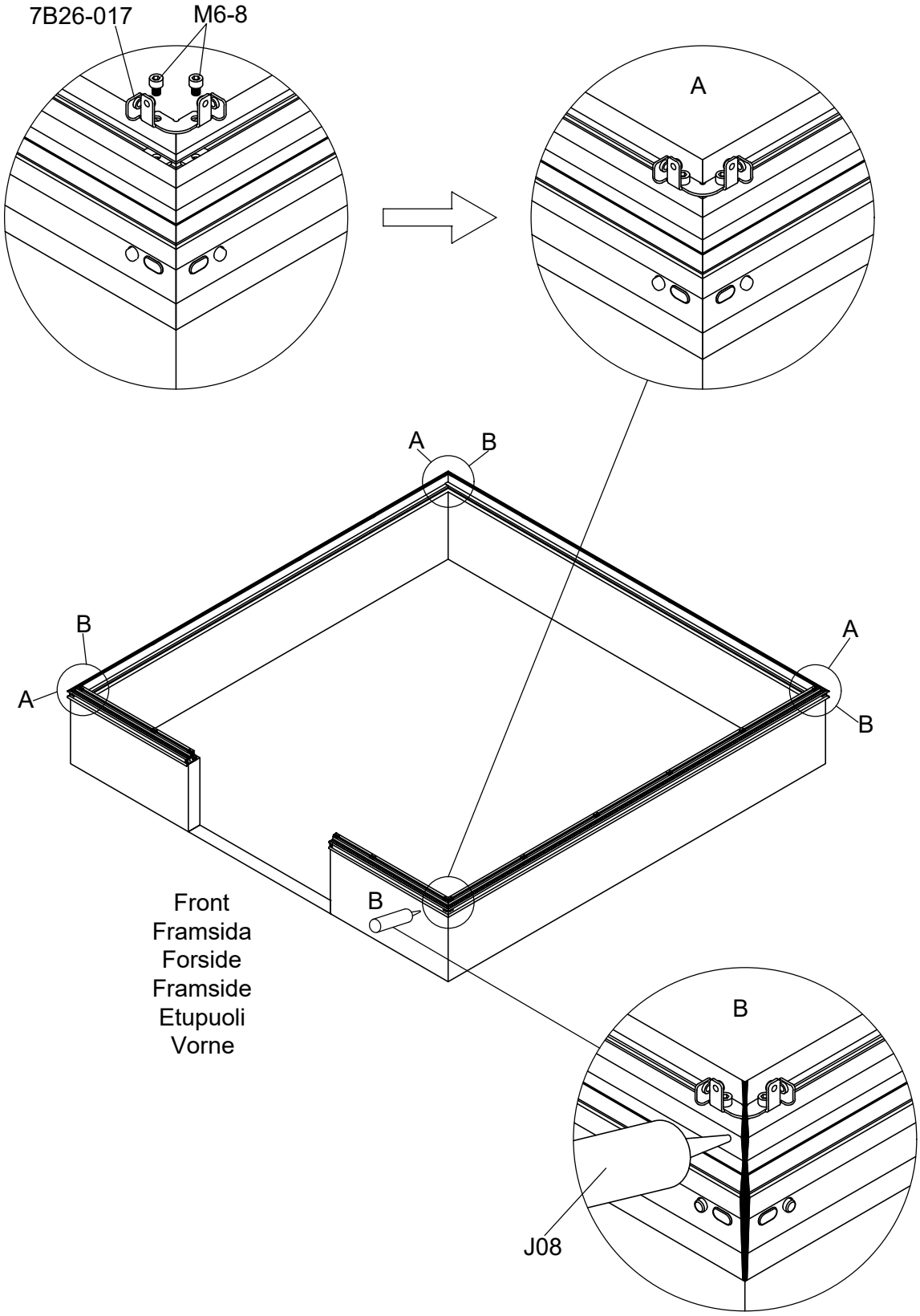

Part	NO.	QTY.	Length(MM)
	30A-Y20	4	1236
	L06	8	1400
	Si6-16	8	PCS
	J05	8	PCS
	M6-8	8	PCS

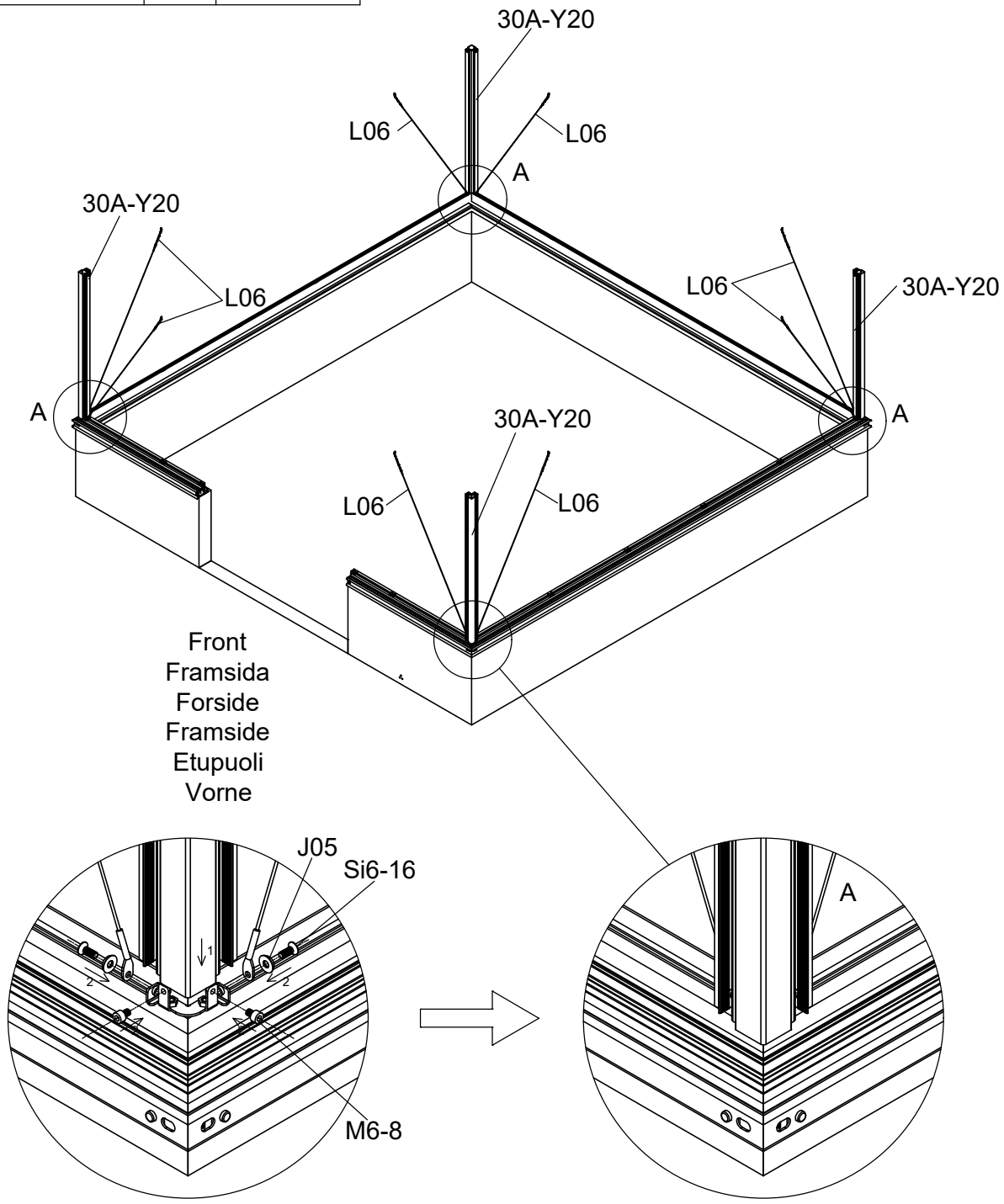

Part	NO.	QTY.	Length(MM)
	30X-Y61-5	1	3889
	30X-Y60-5	1	3889
	30X-Y62-5NR	1	3889
	30X-Y62-5NL	1	3889
	7B26-018	4	PCS
	W05	4	27
	Si6-16	16	PCS
	Si6-12	8	PCS
	J05	24	PCS
	7B26-033	8	PCS

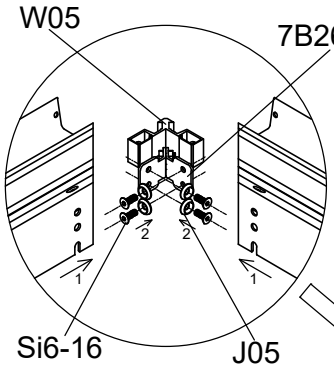

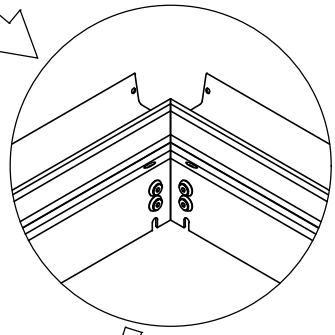

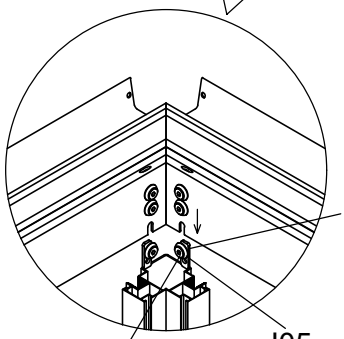

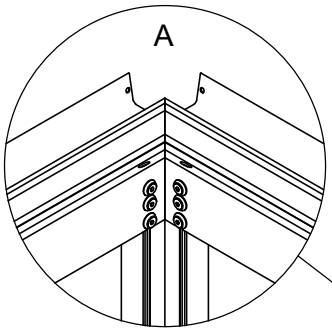

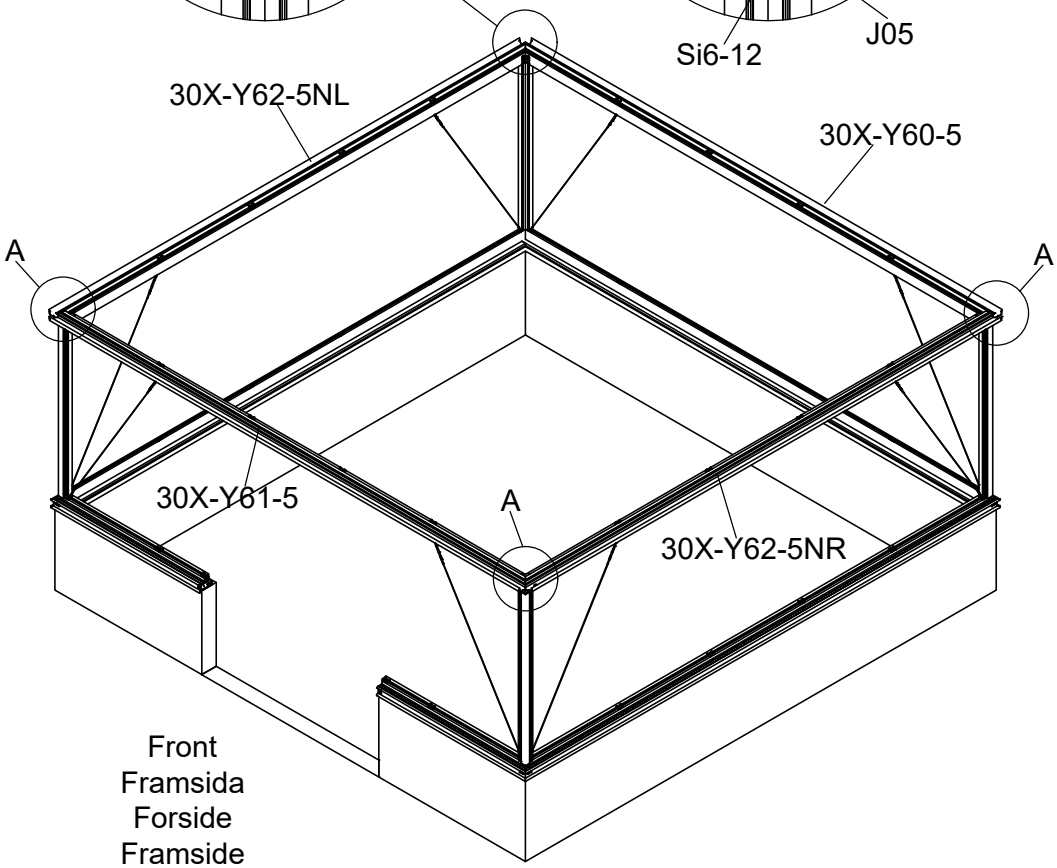

Front
Framsida
Forside
Framside
Etupuoli
Vorne

If you have chosen Side Windows, please assemble them from this step.
Please refer to the Side Window Instructions Page "7W1A-V3S 6/16 - 16/16".

Om du har valt sidofönster ska du montera dem från och med det här steget.
Se sidan med instruktioner för sidofönster "7W1A-V3S 6/16 - 16/16".

Hvis du har valgt sidevinduer, skal du montere dem fra dette trin og fremefter.
Se side 7W1A-V3S 6/16 - 16/16 i vejledningen til sidevinduer.

Hvis du har valgt Sidevinduer, vennligst sett dem sammen fra dette trinnet.
Vennligst se sidevindusinstruksjonene "7W1A-V3S 6/16 - 16/16".

Jos olet valinnut sivuikkunat, kokoa ne tästä vaiheesta alkaen.
Katso sivuikkunoiden ohjeet sivulta "7W1A-V3S 6/16 - 16/16".

Wenn Sie sich für Seitenfenster entschieden haben, montieren Sie diese bitte ab diesem Schritt.
Bitte beachten Sie die Anleitung für die Seitenfenster auf der Seite "7W1A-V3S 6/16 - 16/16".

Green Room®
BY WILLAB GARDEN

SH7W1A-V3S

If the Side Window is assembled on a new greenroom, please start with Page 6/16.
If the Side Window is added to an existing greenroom, please start with Page 1/16.

Vid montage på ett nytt Green Room, börja på sidan 6/16.
Vid eftermontage på ett befintligt Green Room börjar du på sidan 1/16.

Hvis sidevinduet monteres på et nyt Green Room, skal du starte på side 6/16.
Ved eftermontering på et eksisterende Green Room, skal du starte på side 1/16.

Hvis sidevinduet er montert på et nytt Green Room, start på side 6/16.
Ved ettermontering til et eksisterende Green Room, start på side 1/16.

Jos sivuikkuna asennetaan uuteen Green Room, aloita sivulta 6/16.
Jos sivuikkuna lisätään olemassa olevaan Green Room, aloita sivulta 1/16.

Wenn das Seitenfenster in einem neuen Green Room, montiert wird, beginnen Sie bitte mit Seite 6/16.
Wenn das Seitenfenster in einen bestehenden Green Room, eingebaut wird, beginnen Sie bitte mit Seite 1/16.

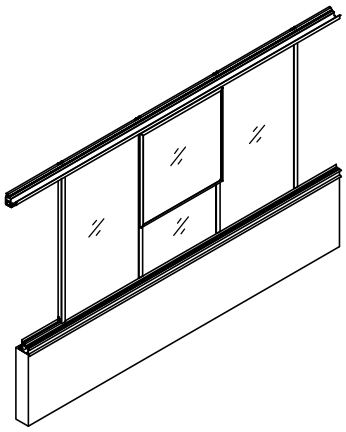

Part	NO.	QTY.	Length(MM)
	40A-Y30	8	1235
	Si6-16	16	PCS
	J05	16	PCS

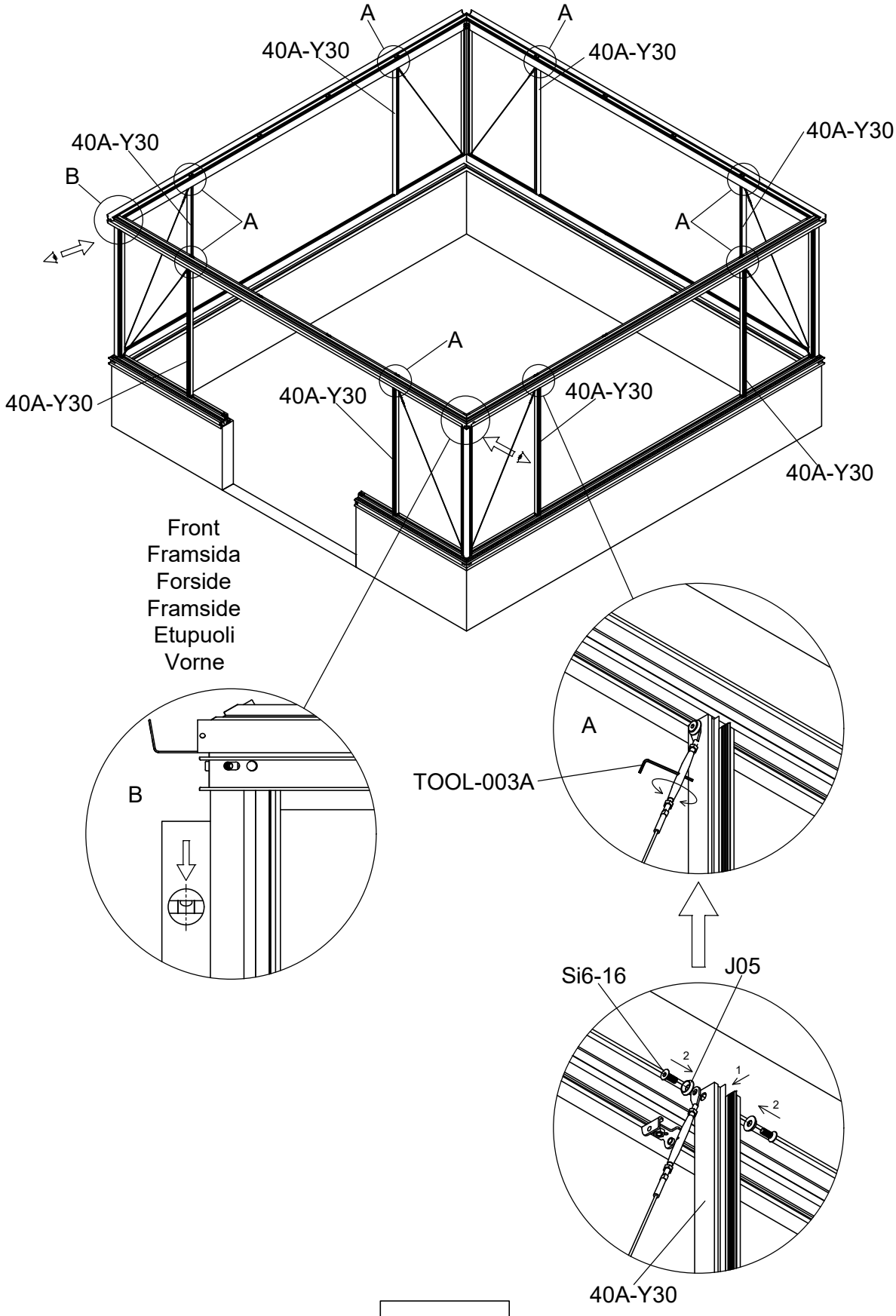

Part	NO.	QTY.	Length(MM)
	40A-Y30R	2	1235
	40A-Y30L	2	1235
	40X-Y34B	2	713
	Si5-16	8	PCS
	7C28-004	8	PCS

2 PCS

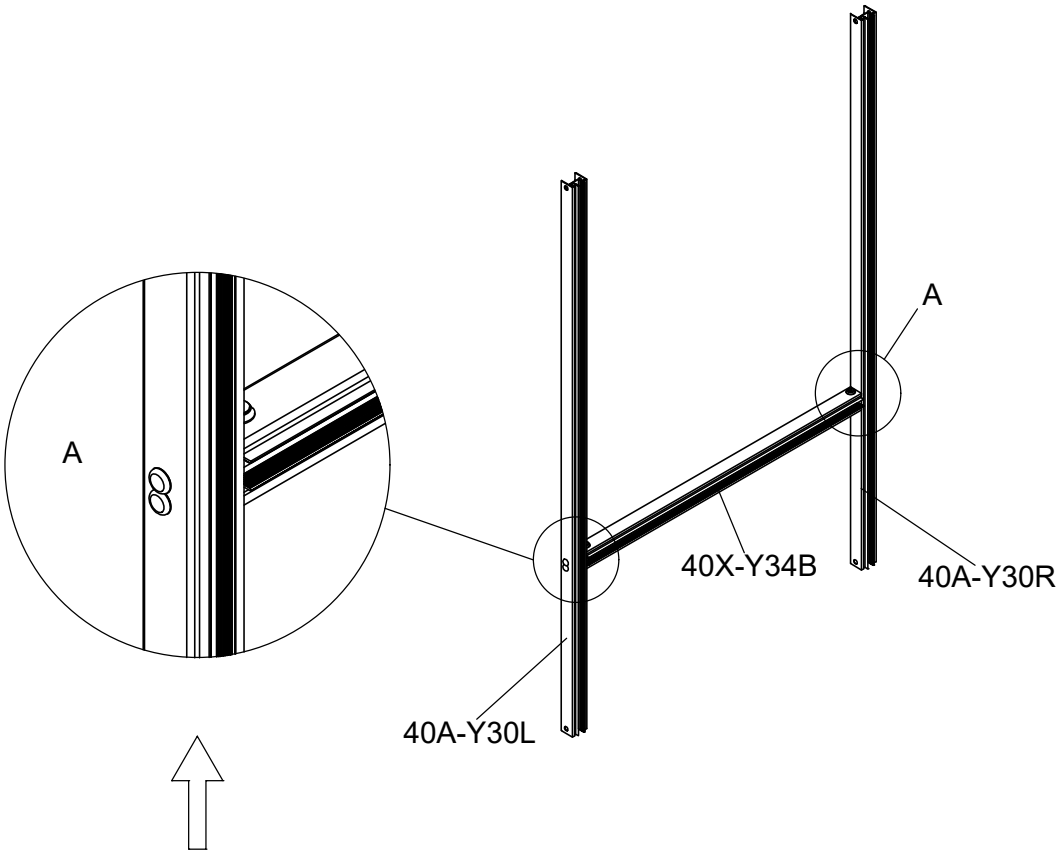

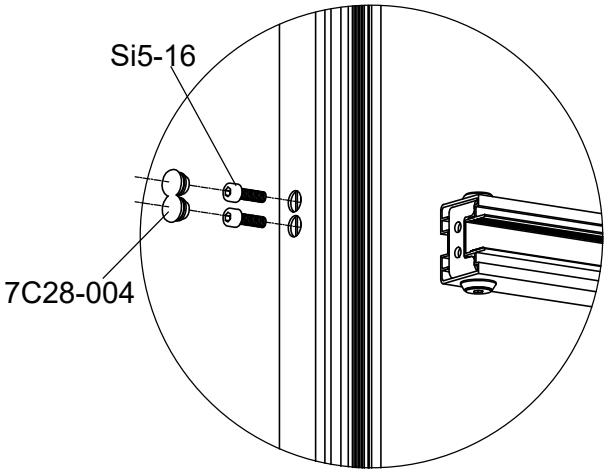

Part	NO.	QTY.	Length(MM)
	40A-Y30	4	1235
	Si6-16	44	PCS
	J05	44	PCS

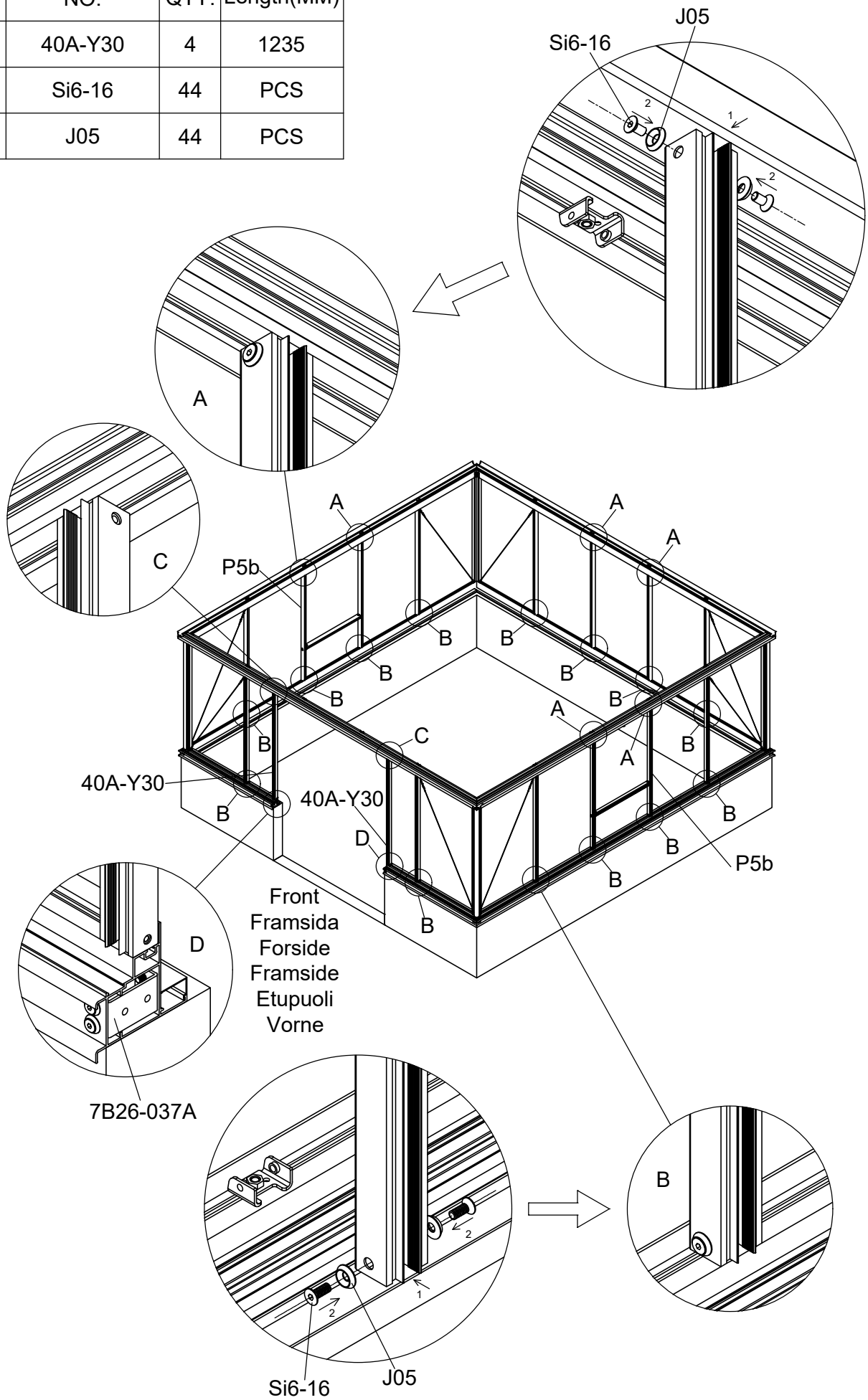

Part	NO.	QTY.	Length(MM)
	30X-Y63	4	432
	30X-Y63-B	4	290
	7B26-018	4	PCS
	W02	4	22
	Si6-16	16	PCS
	J05	16	PCS
	S6-10	8	PCS

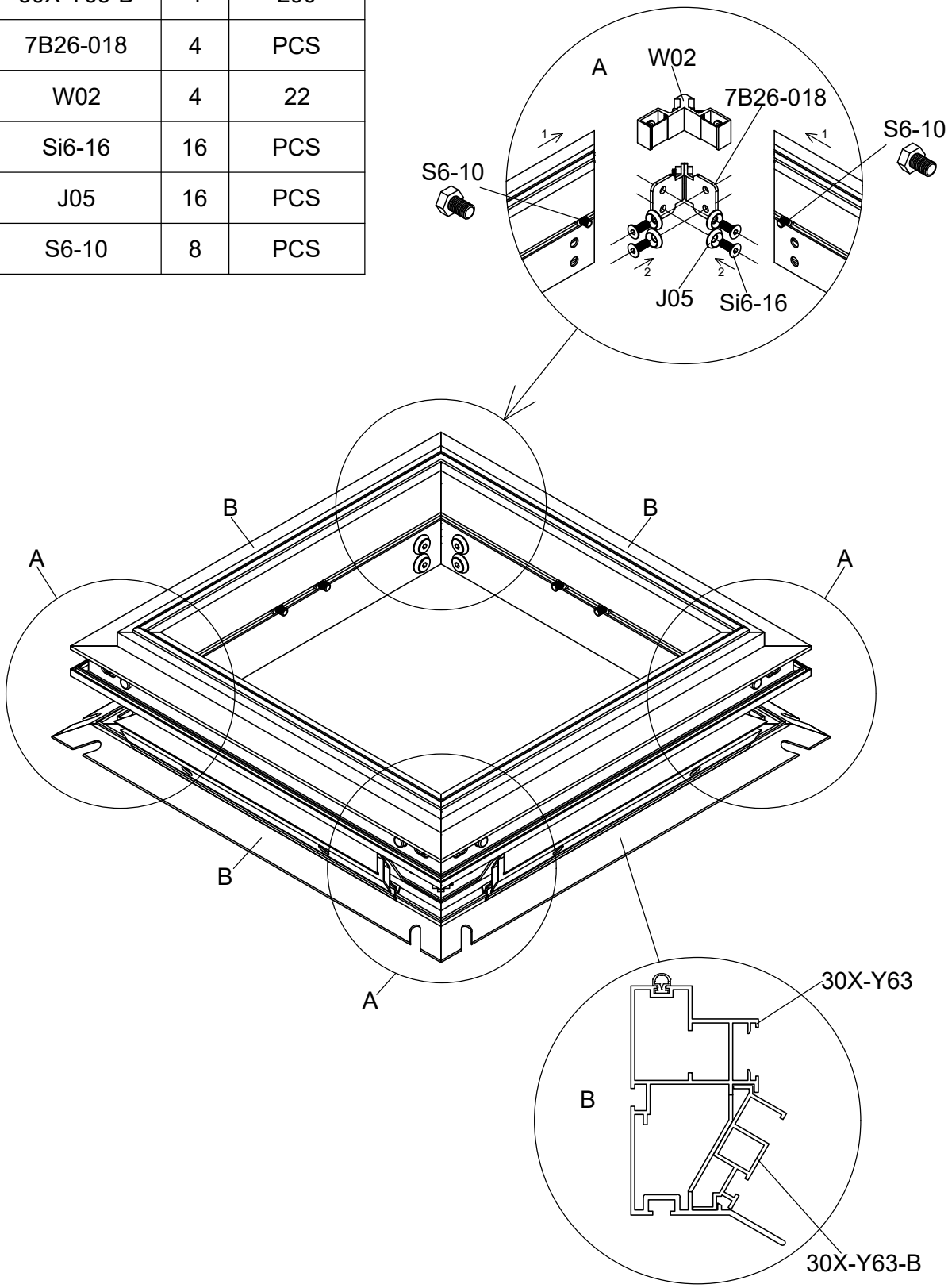

Part	NO.	QTY.	Length(MM)
	30X-Y21-5	1	2702
	30X-Y32L-5	1	1711
	30X-Y31R-5	1	844
	30X-Y31L-5	1	844
	M6-8	6	PCS
	Si6-16	6	PCS
	J05	6	PCS
	Mi8	2	PCS
	S8-12	2	PCS

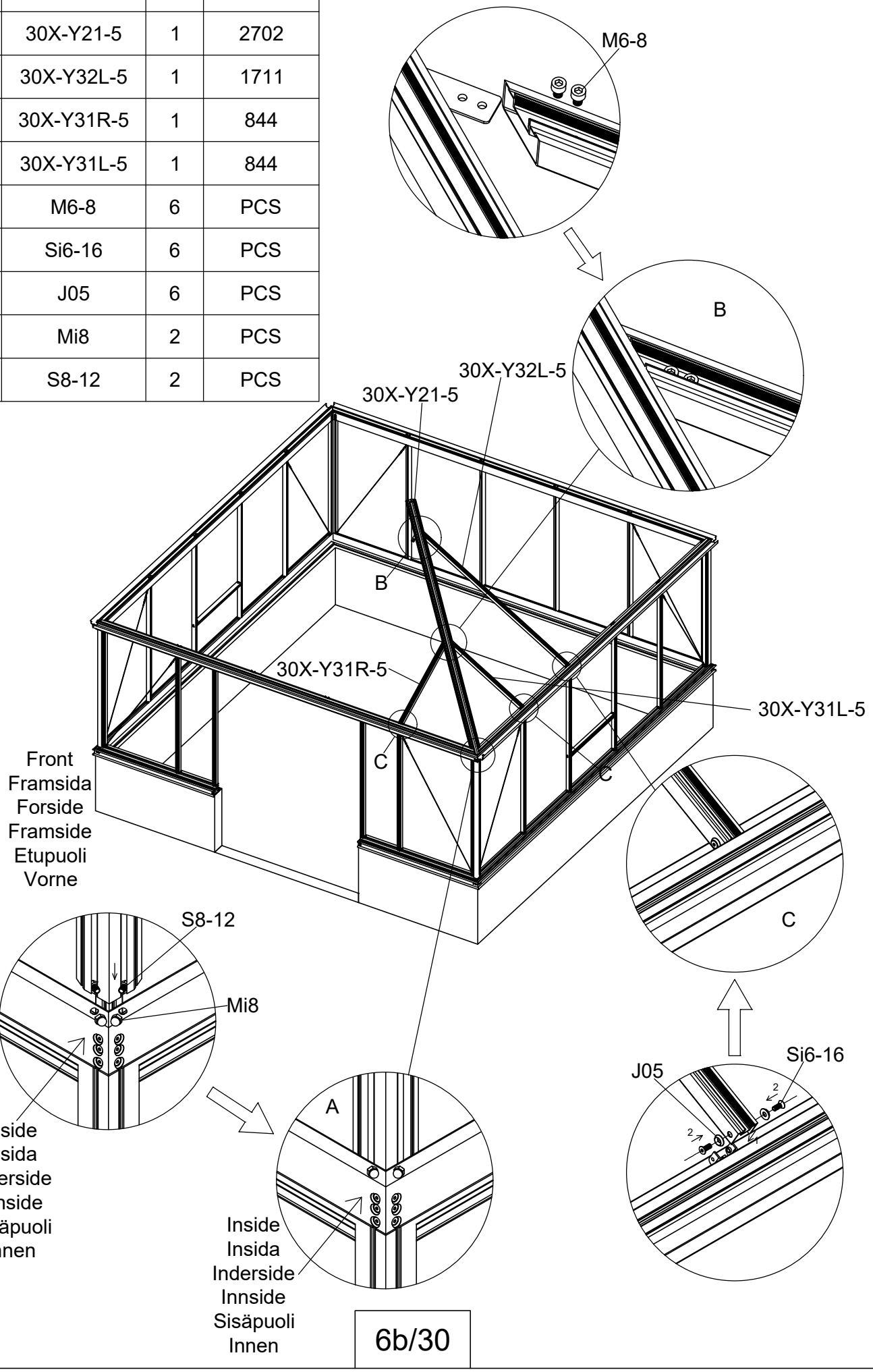

Part	NO.	QTY.	Length(MM)
	Mi8	2	PCS
	S8-12	2	PCS

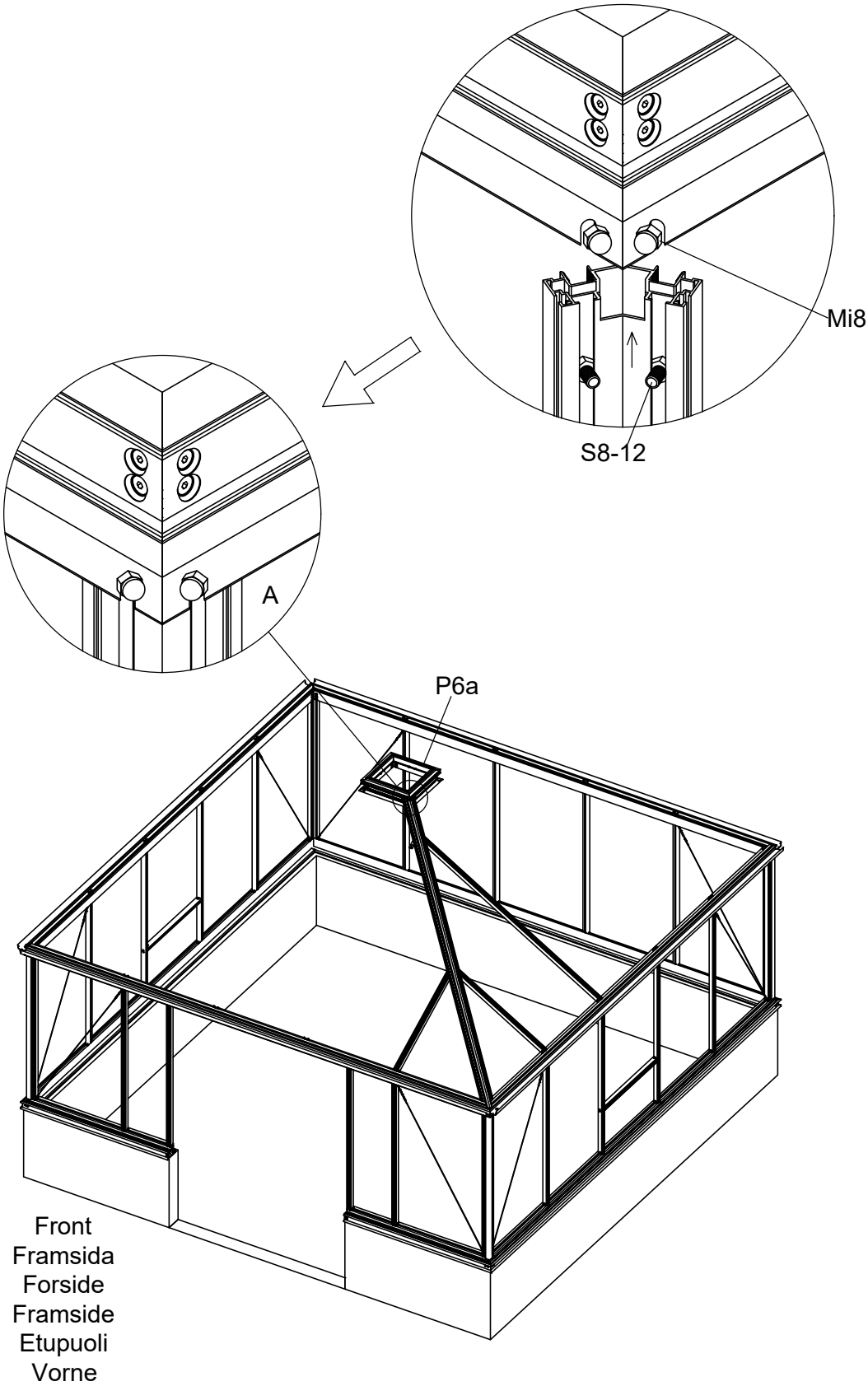

Part	NO.	QTY.	Length(MM)
	30X-Y21-5	3	2702
	Mi8	12	PCS
	S8-12	12	PCS

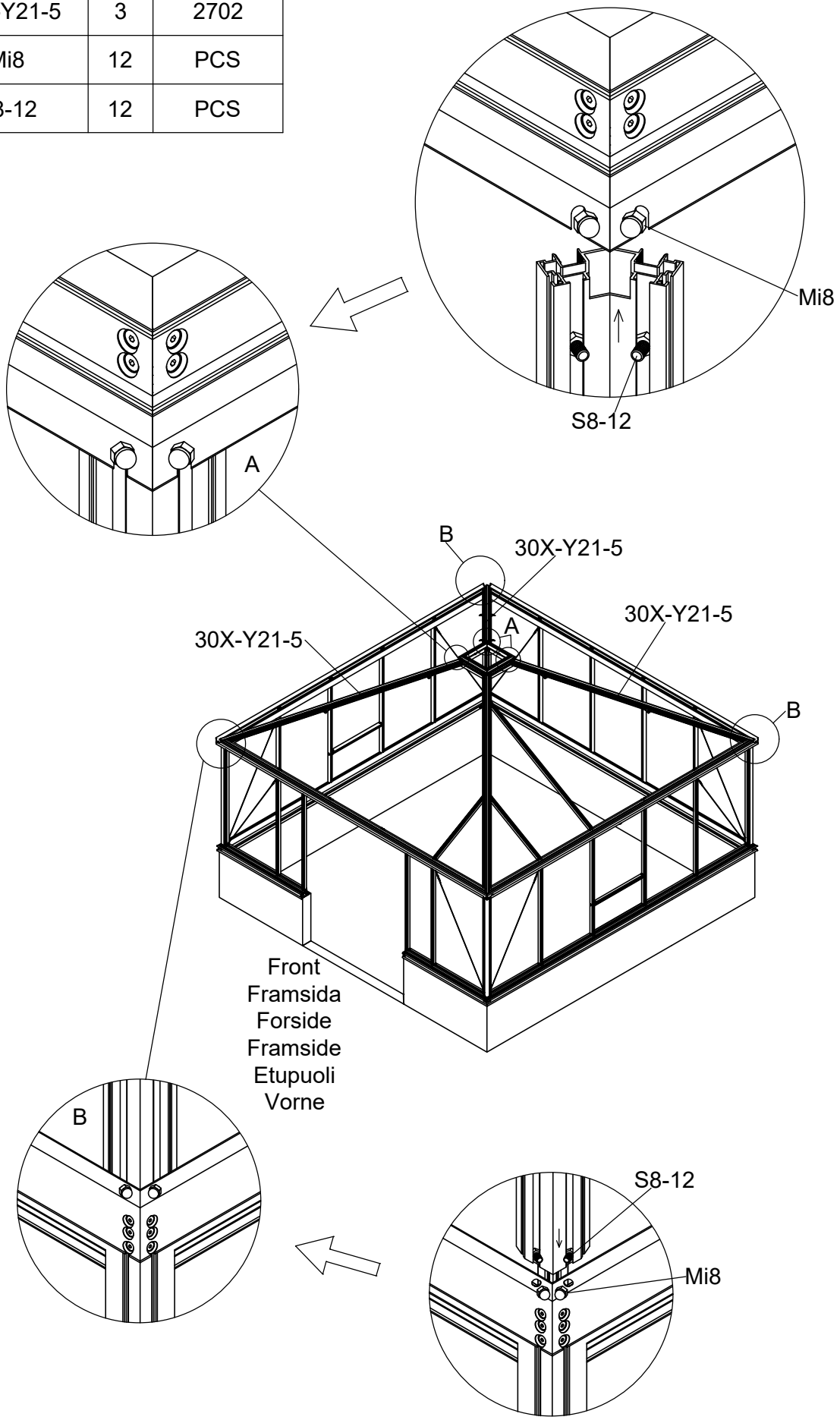

Part	NO.	QTY.	Length(MM)
	30X-Y33R-5	2	1711
	30X-Y33L-5	2	1711
	40X-Y34B	4	713
	Si5-16	16	PCS
	7C28-004	16	PCS

2 PCS

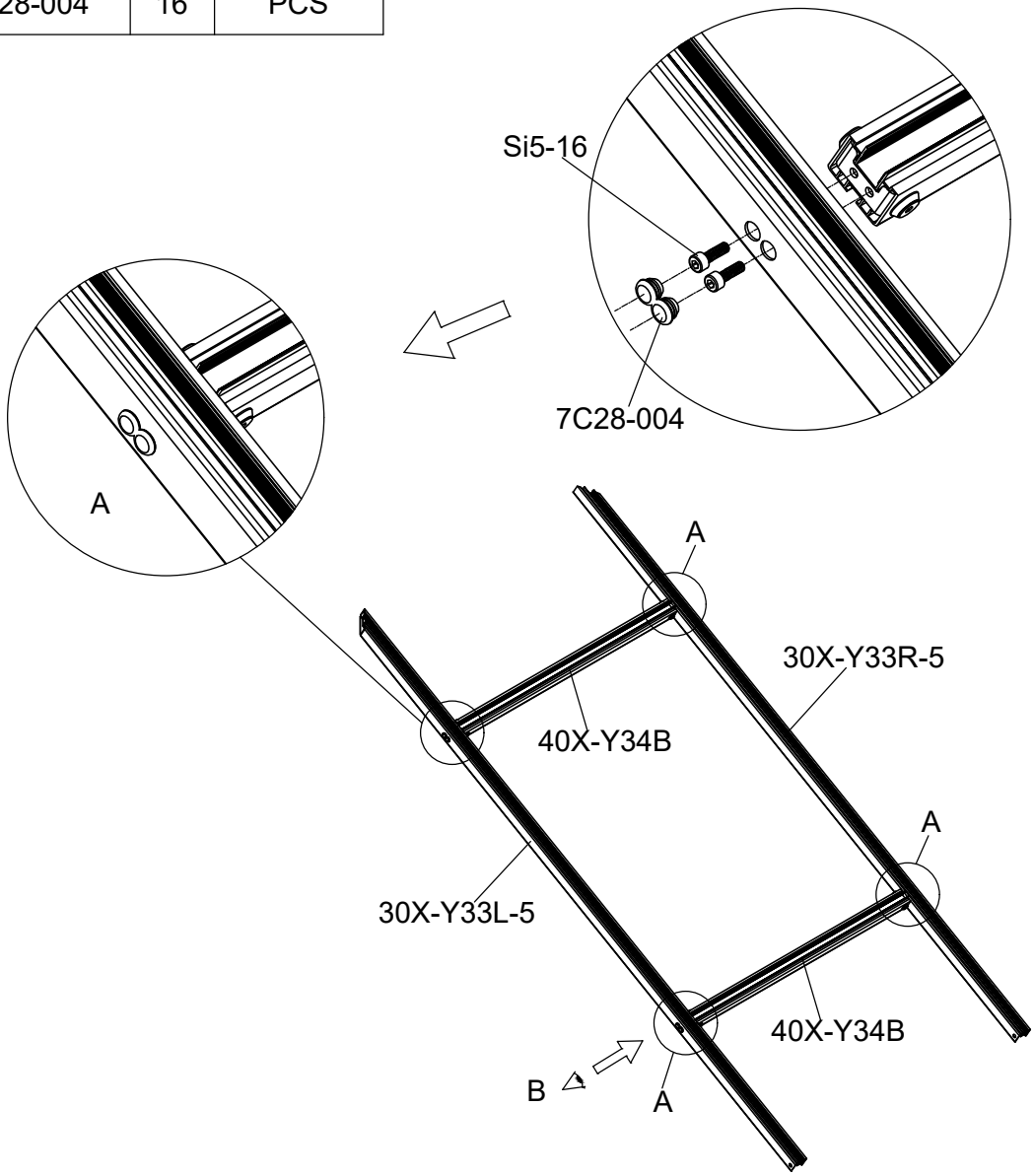

Part	NO.	QTY.	Length(MM)
	30X-Y32R-5	2	1711
	30X-Y32L-5	1	1711
	30X-Y31R-5	3	844
	30X-Y31L-5	3	844
	M6-8	26	PCS
	Si6-16	26	PCS
	J05	26	PCS

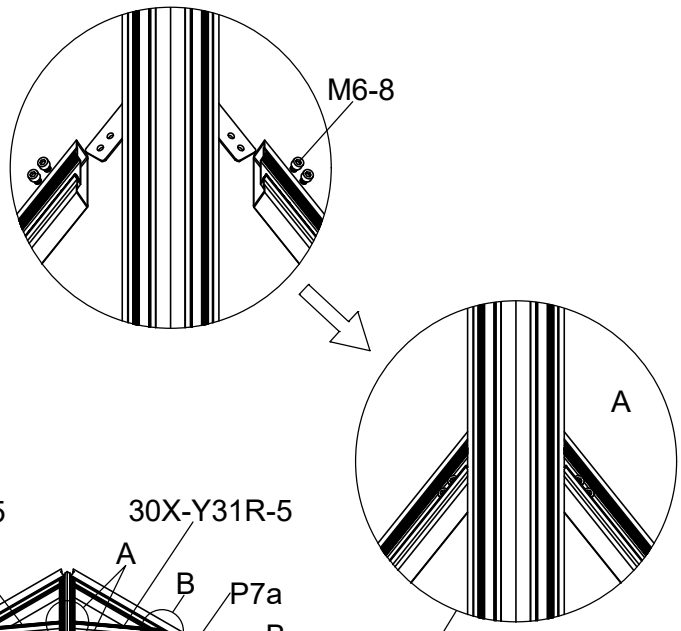

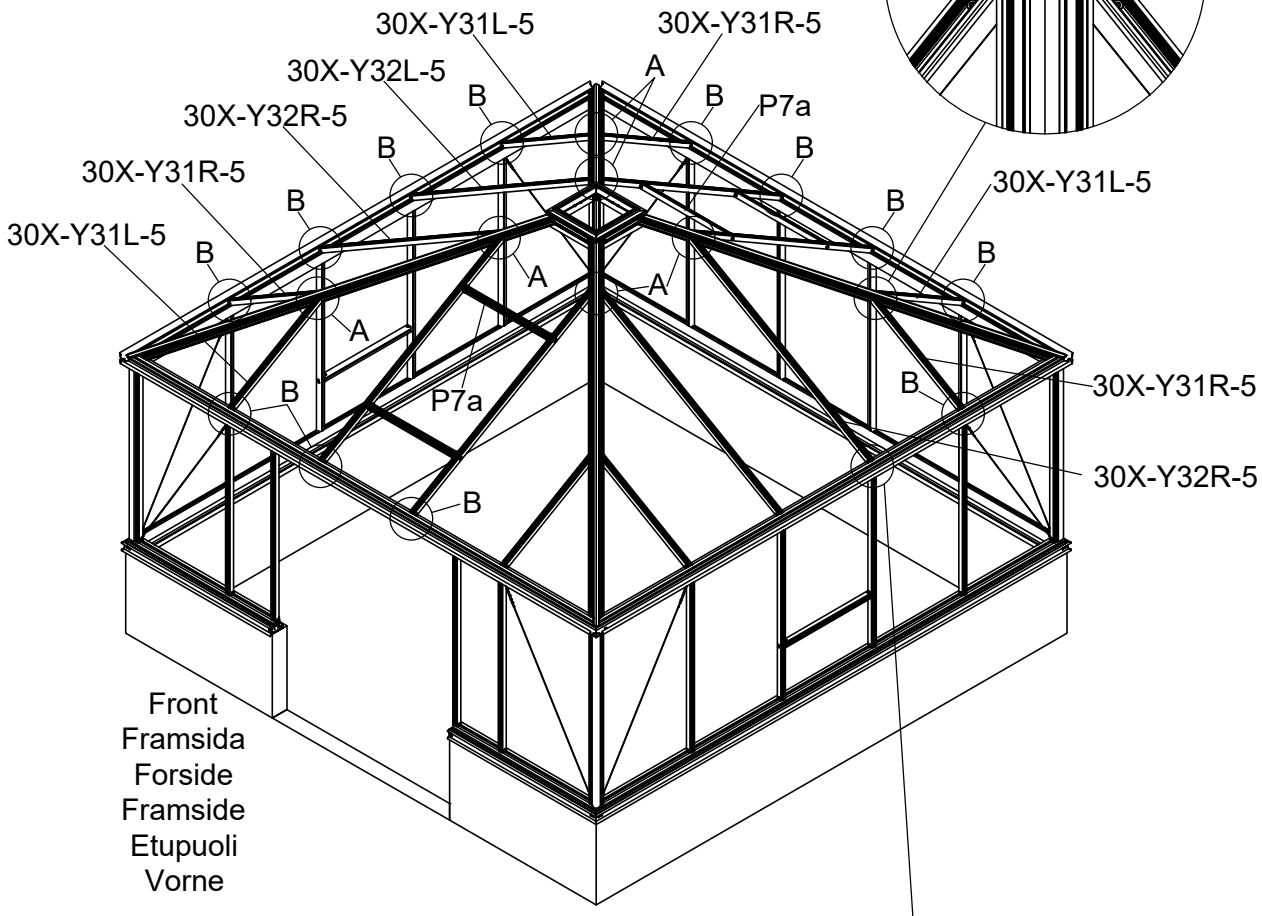

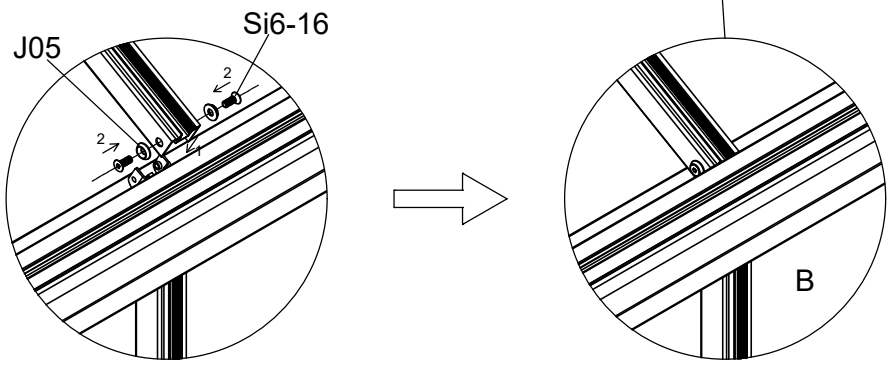

Part	NO.	QTY.	Length(MM)
	Z4.2-13	8	PCS
	7C28-004	8	PCS

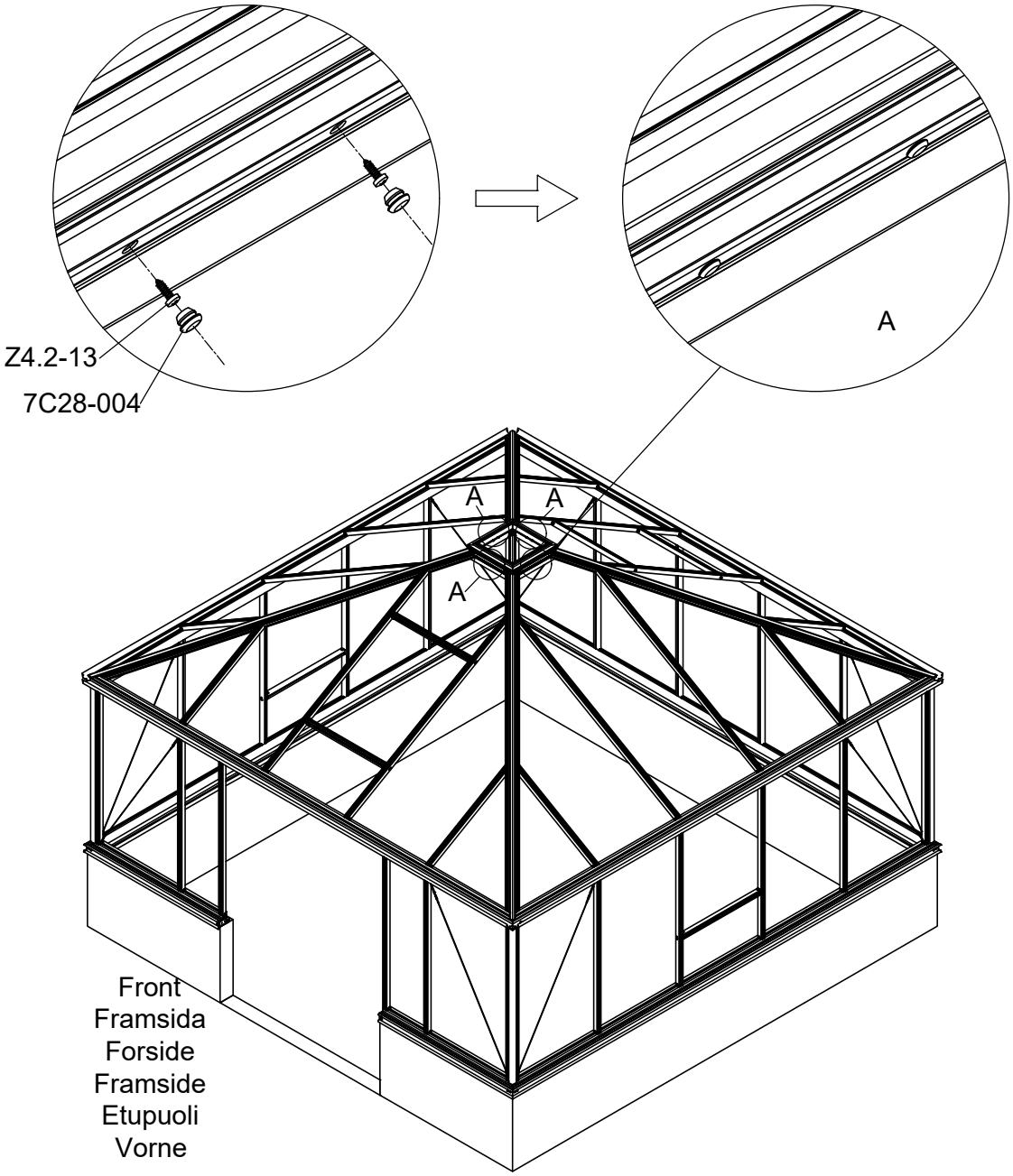

Part	NO.	QTY.	Length(MM)	CTN NO.
	40A-Y101L	1	1910	3040P-HD
	40A-Y101R	1	1910	3040P-HD
	7C26-031	2	PCS	3040P-HD
	Si6-25	8	PCS	3040P-HD
	J05	8	PCS	3040P-HD
	PSJ8-50	2	PCS	3040P-HD
	DQ6-12	2	PCS	3040P-HD
	SW6-50	2	PCS	3040P-HD

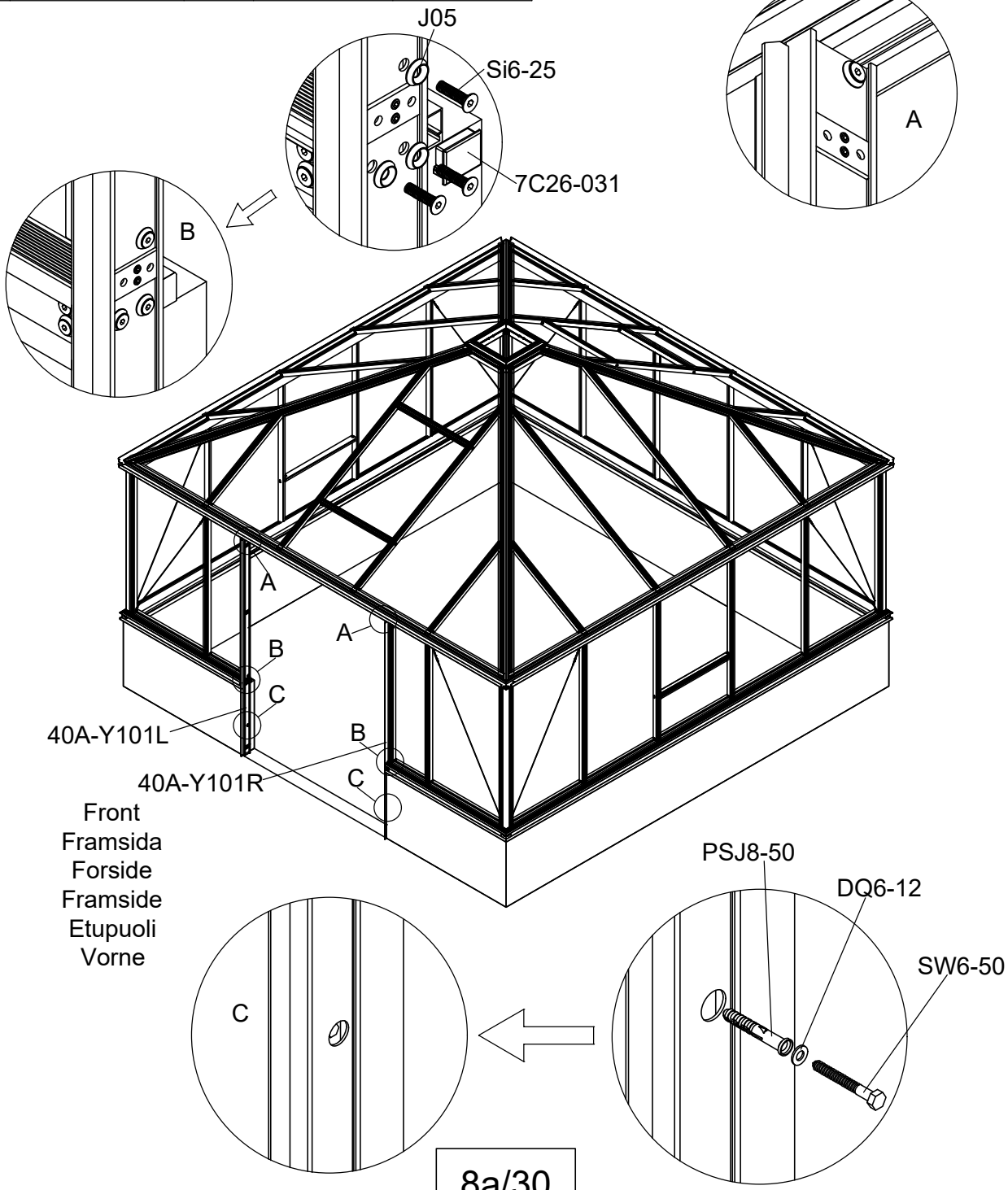

Part	NO.	QTY.	Length(MM)
	730×1262	6	1262
	354×1262	2	1262
	730×386	1	730

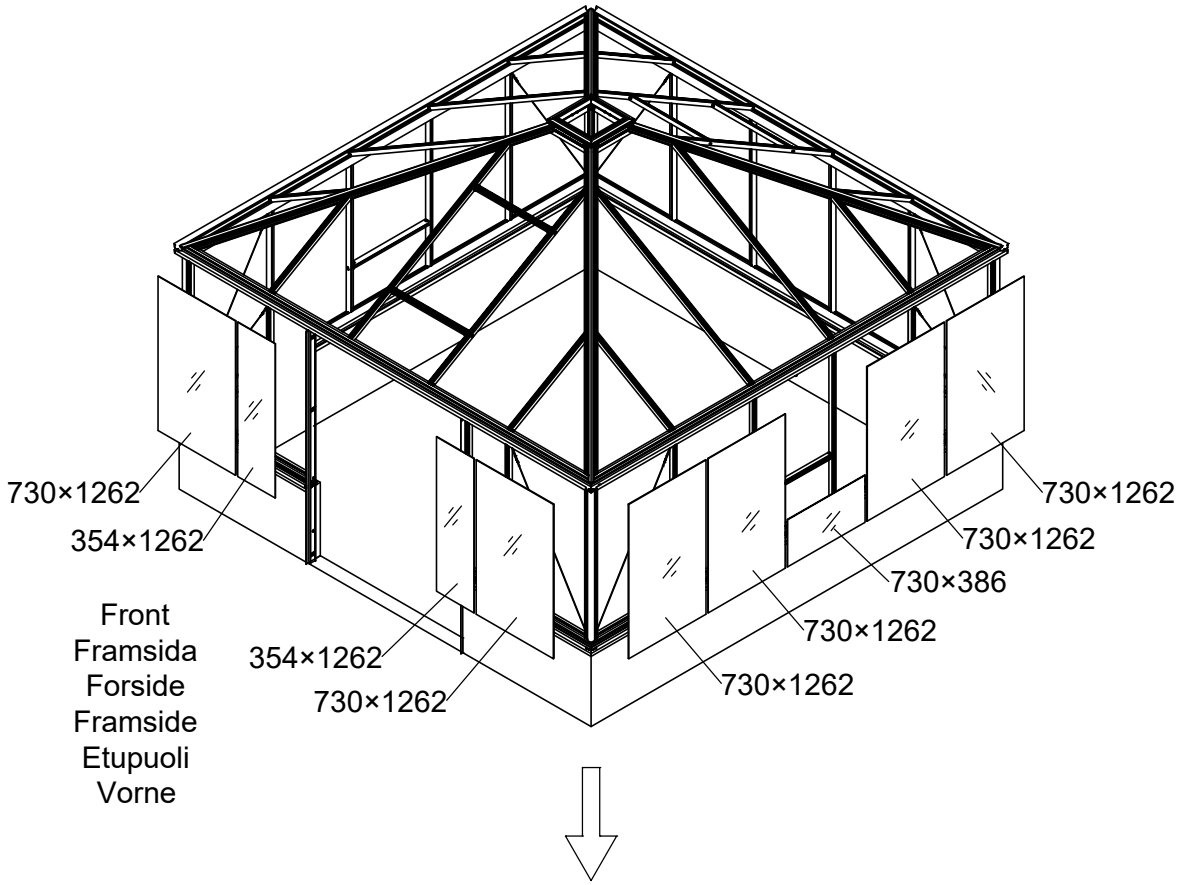

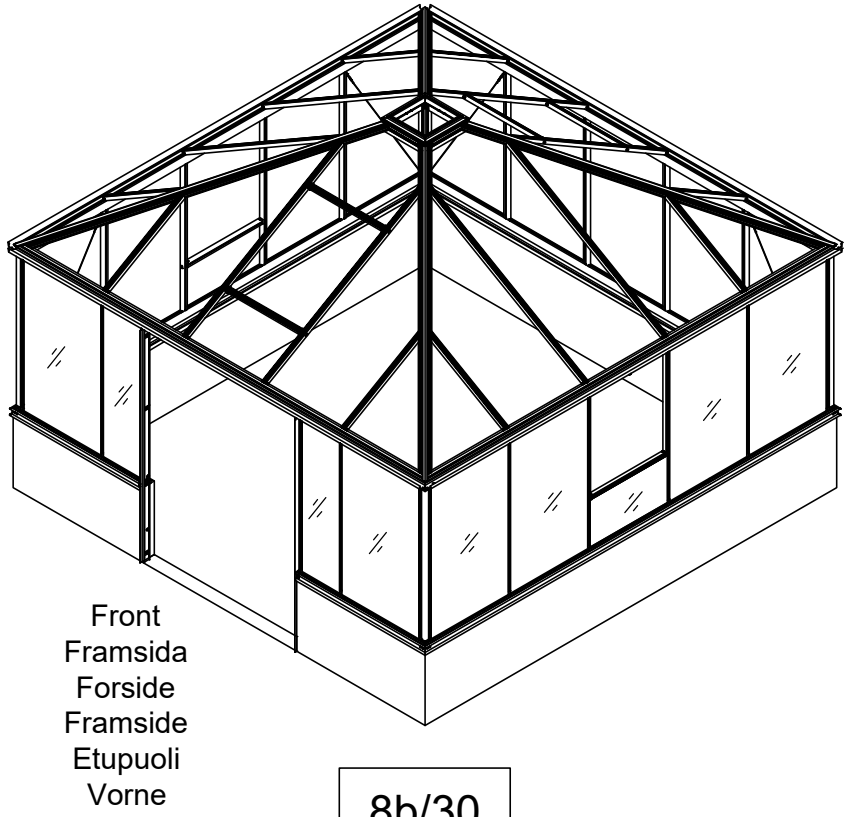

Part	NO.	QTY.	Length(MM)
	730×1262	9	1262
	730×386	1	730

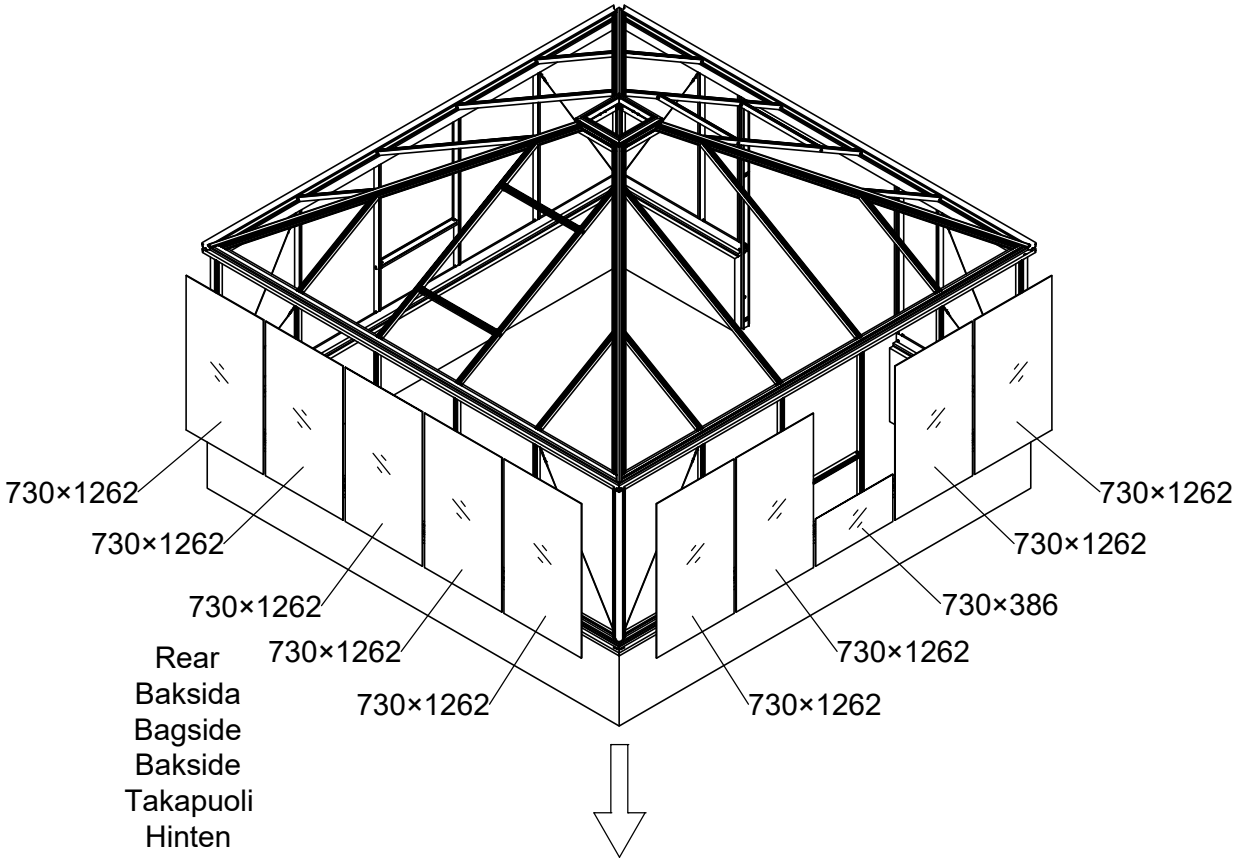

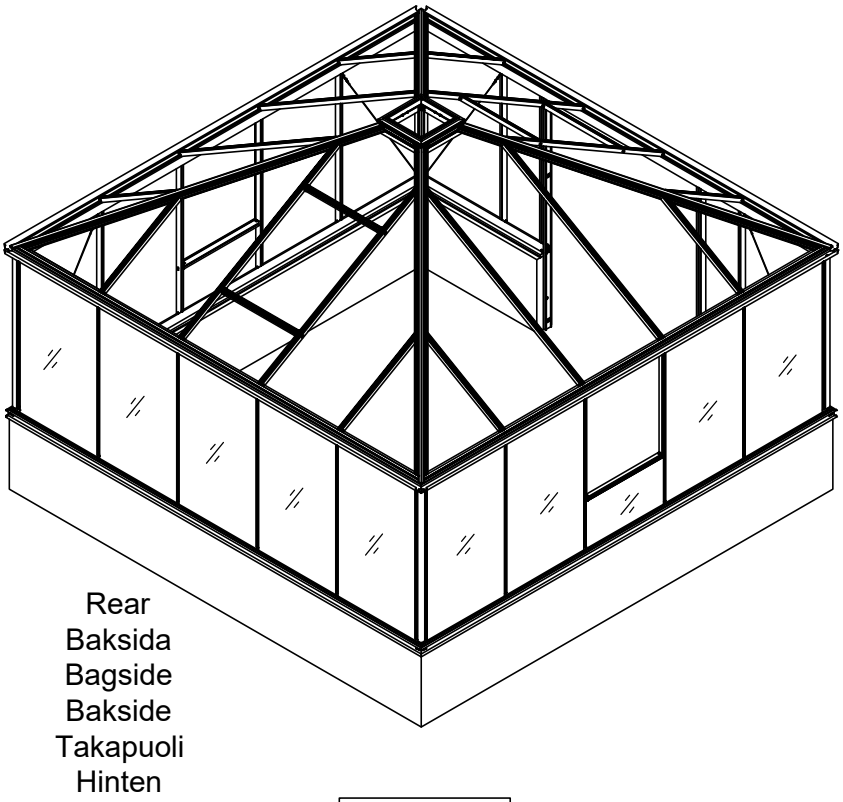

Part	NO.	QTY.	Length(MM)	CTN NO.
	40X-Y15-5	2	3900	3033P-S-BASE5
	40X-Y15-5	1	3900	3033P-S-5F
	50A-Y15-R	1	1218	3043PA-S-5
	50A-Y15-L	1	1218	3043PA-S-5

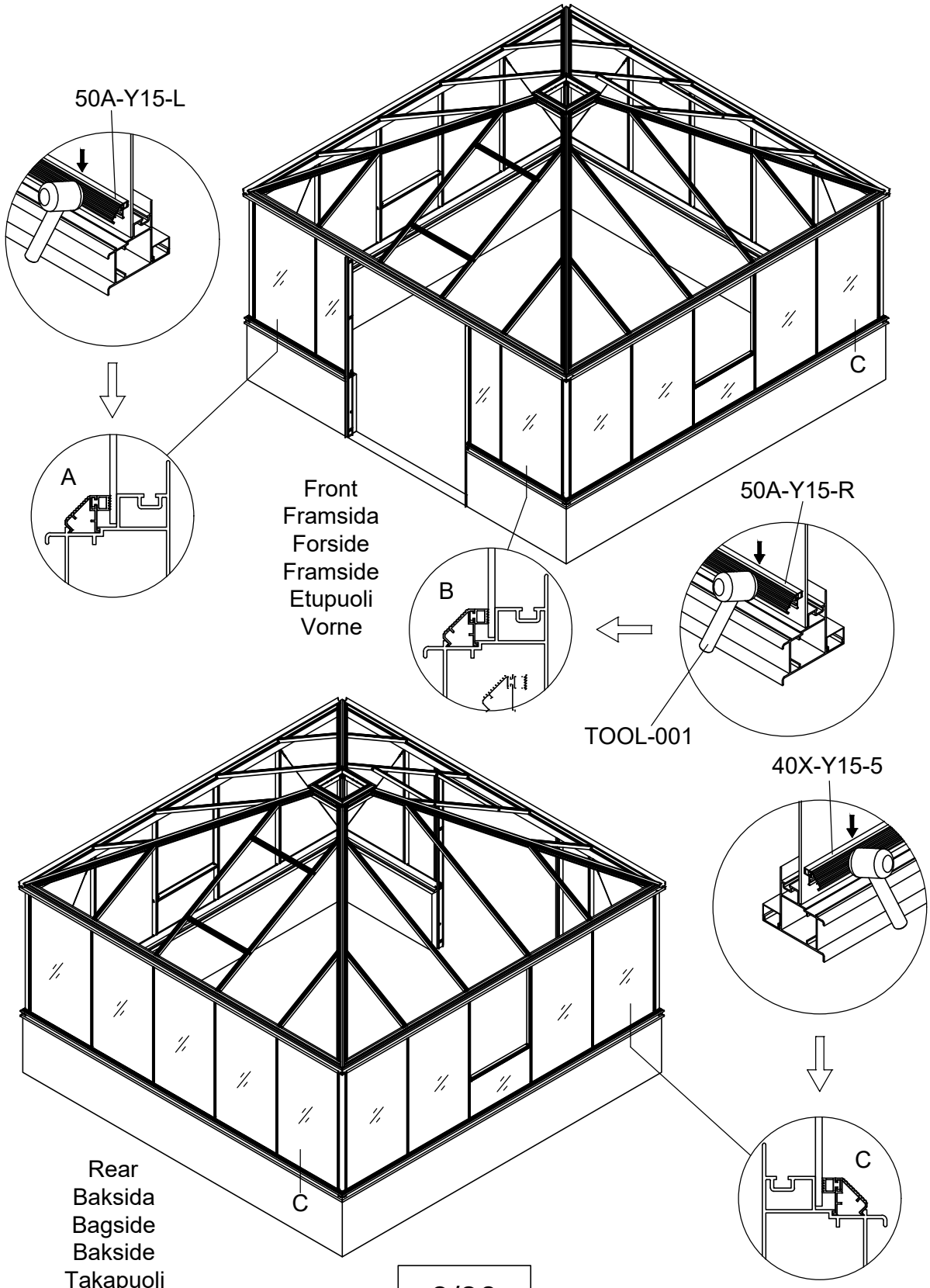

Part	NO.	QTY.	Length(MM)
	40A-Y01	11	1235
	40A-Y02	1	1235
	40X-Y07	1	712

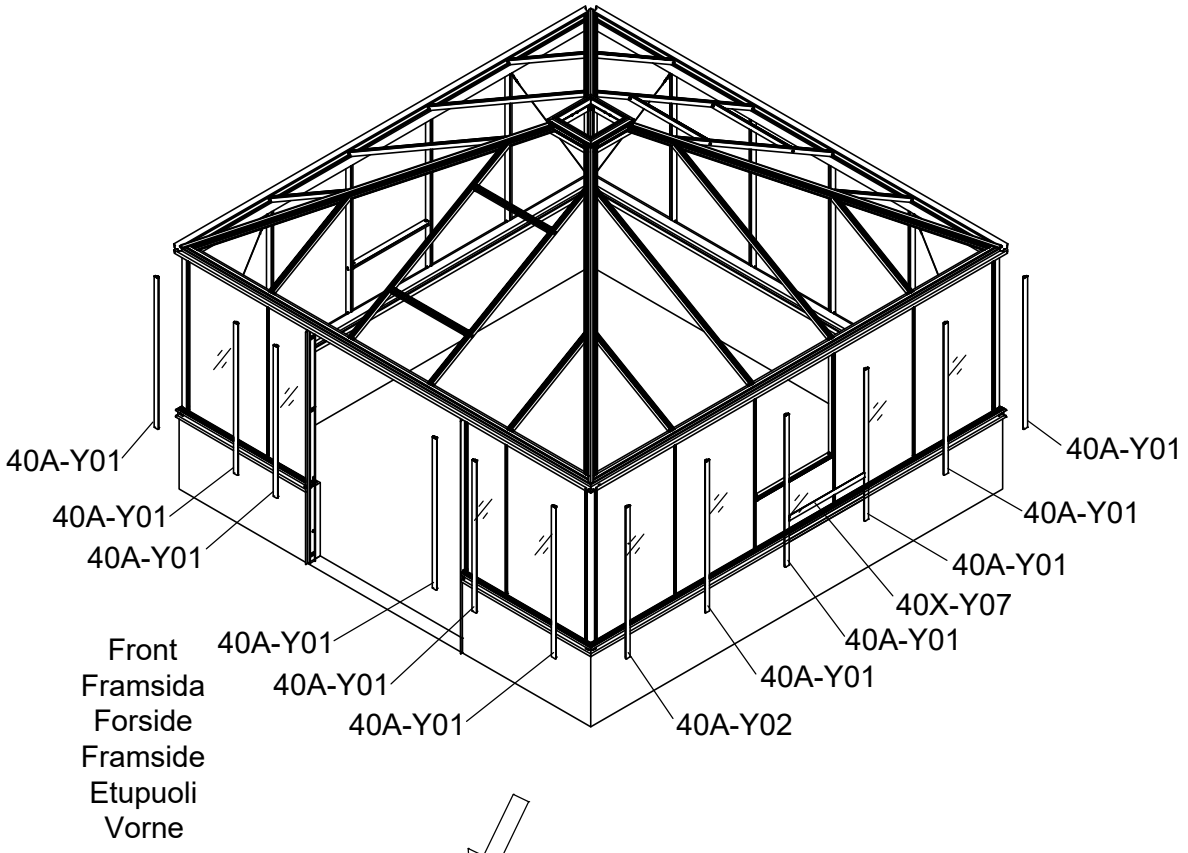

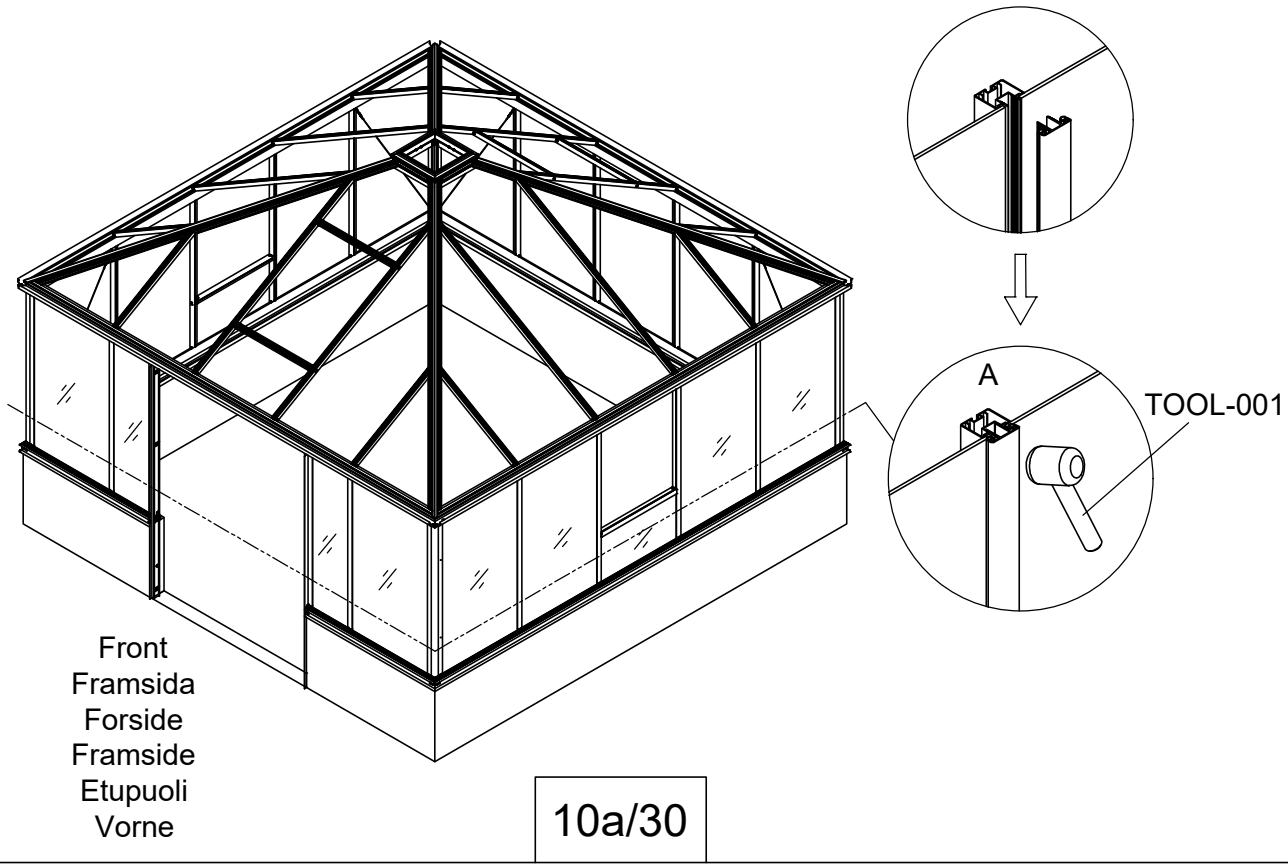

Part	NO.	QTY.	Length(MM)
	40A-Y01	11	1235
	40A-Y02	1	1235
	40X-Y07	1	712

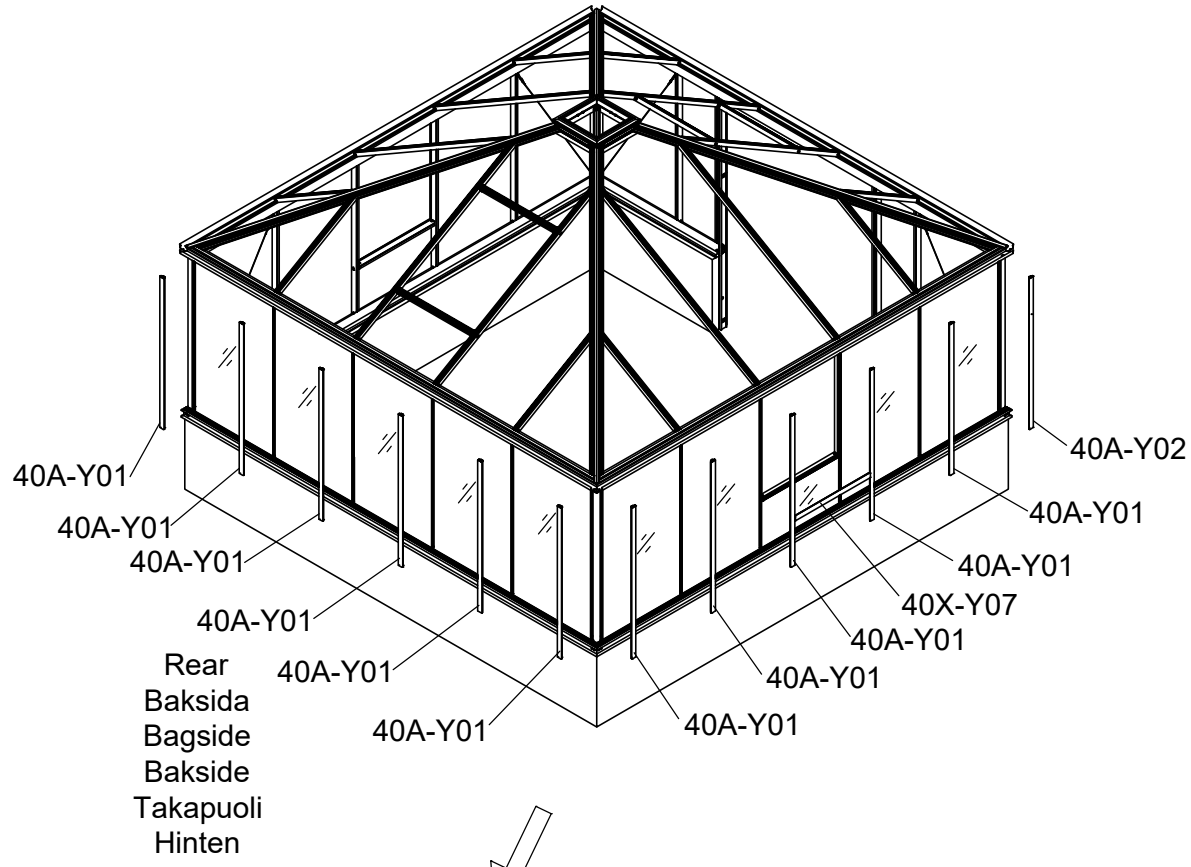

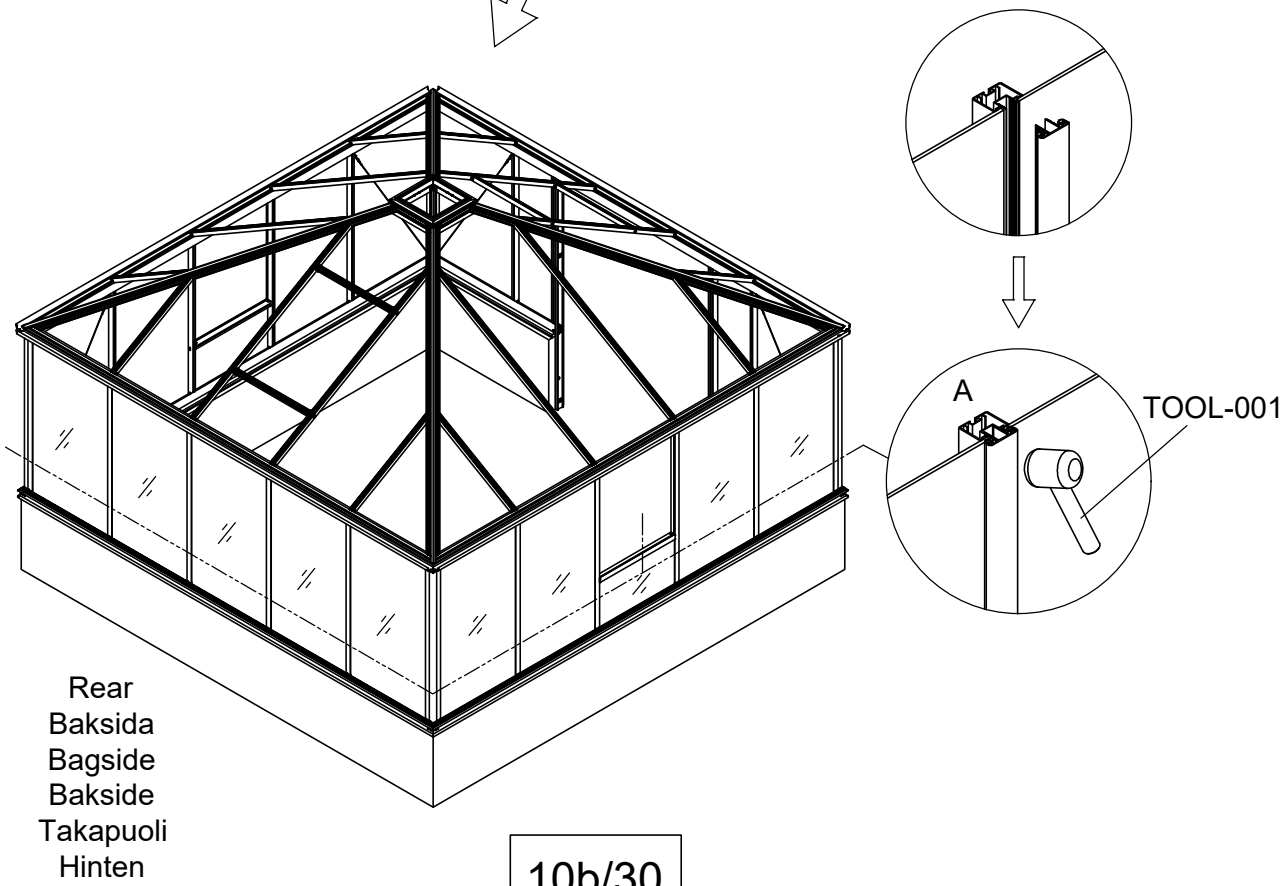

Part	NO.	QTY.	Length(MM)
	7C26-007N	13M	

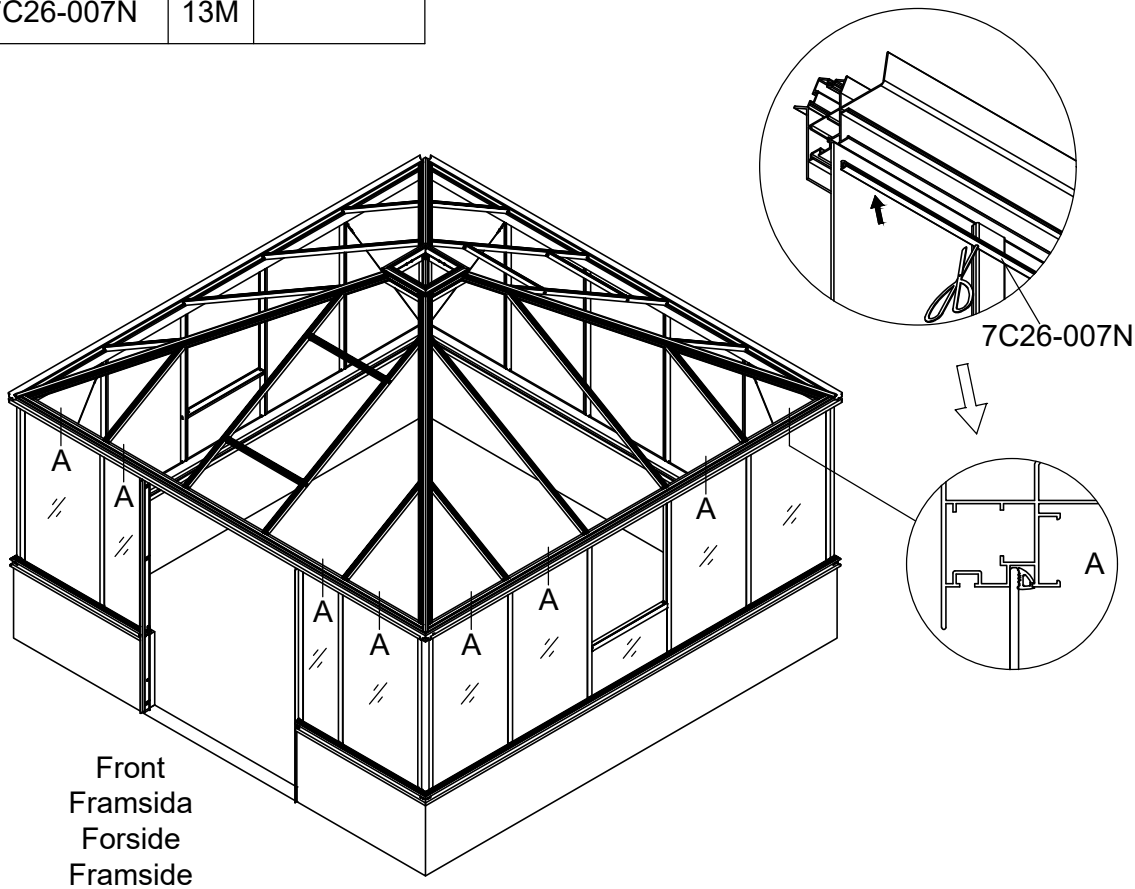

Front
Framsida
Forside
Framside
Etupuoli
Vorne

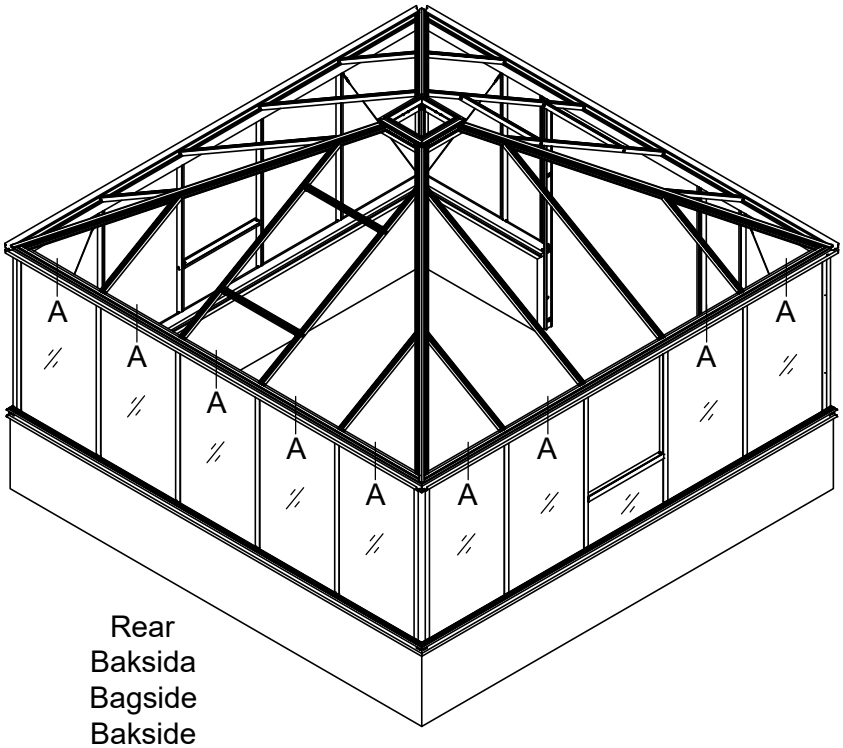

Rear
Baksida
Bagside
Bakside
Takapuoli
Hinten

Part	NO.	QTY.	Length(MM)
	747×863	8	863
	730×1730	8	1730
	730×2005	2	2005
	730×615	2	730
	730×468	2	730

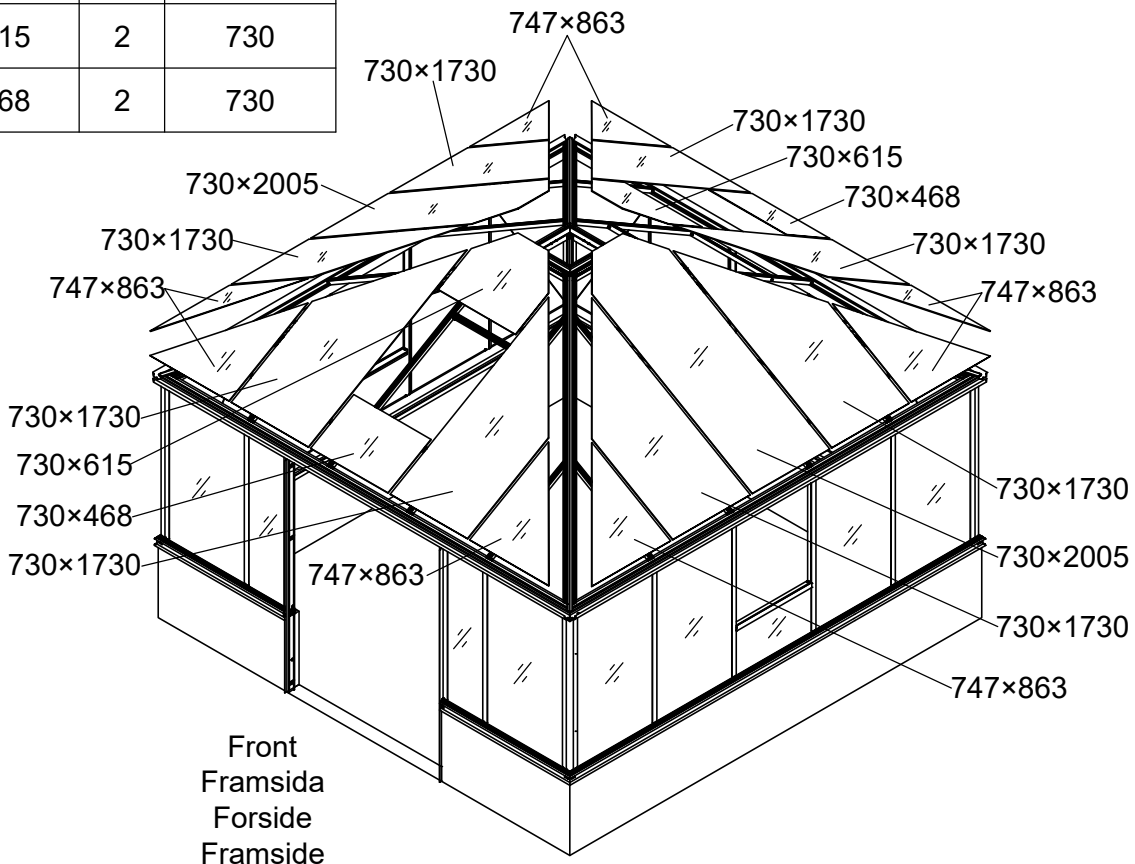

Front
Framsida
Forside
Framside
Etupuoli
Vorne

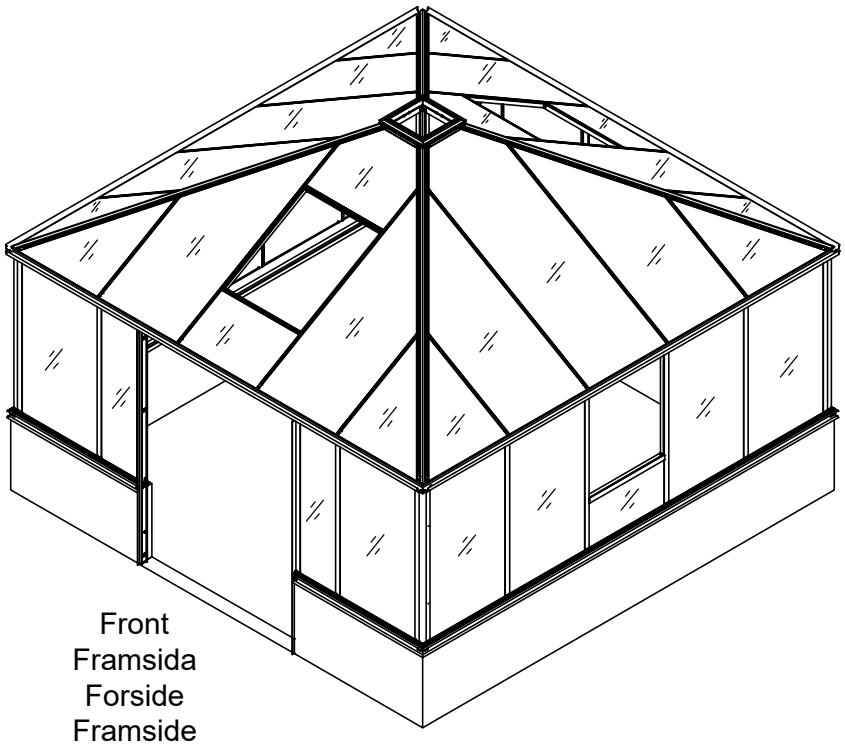

Front
Framsida
Forside
Framside
Etupuoli
Vorne

Part	NO.	QTY.	Length(MM)
	30X-Y03R-5	2	1750
	30X-Y03L-5	2	1750
	30X-Y05R-5	2	1750
	30X-Y05L-5	2	1750
	30X-Y04R-5	4	883
	30X-Y04L-5	4	883
	40X-Y07	2	712
	30X-Y07	2	712

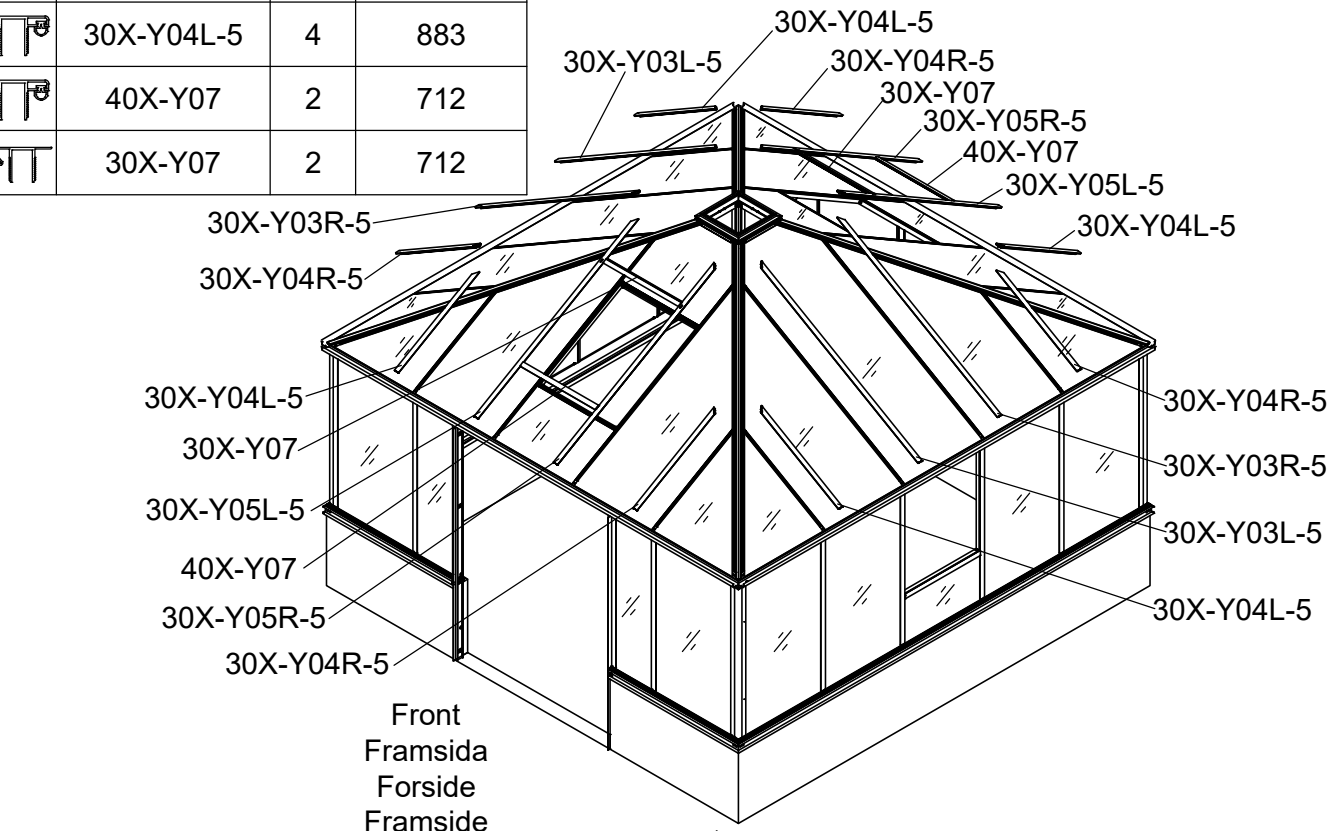

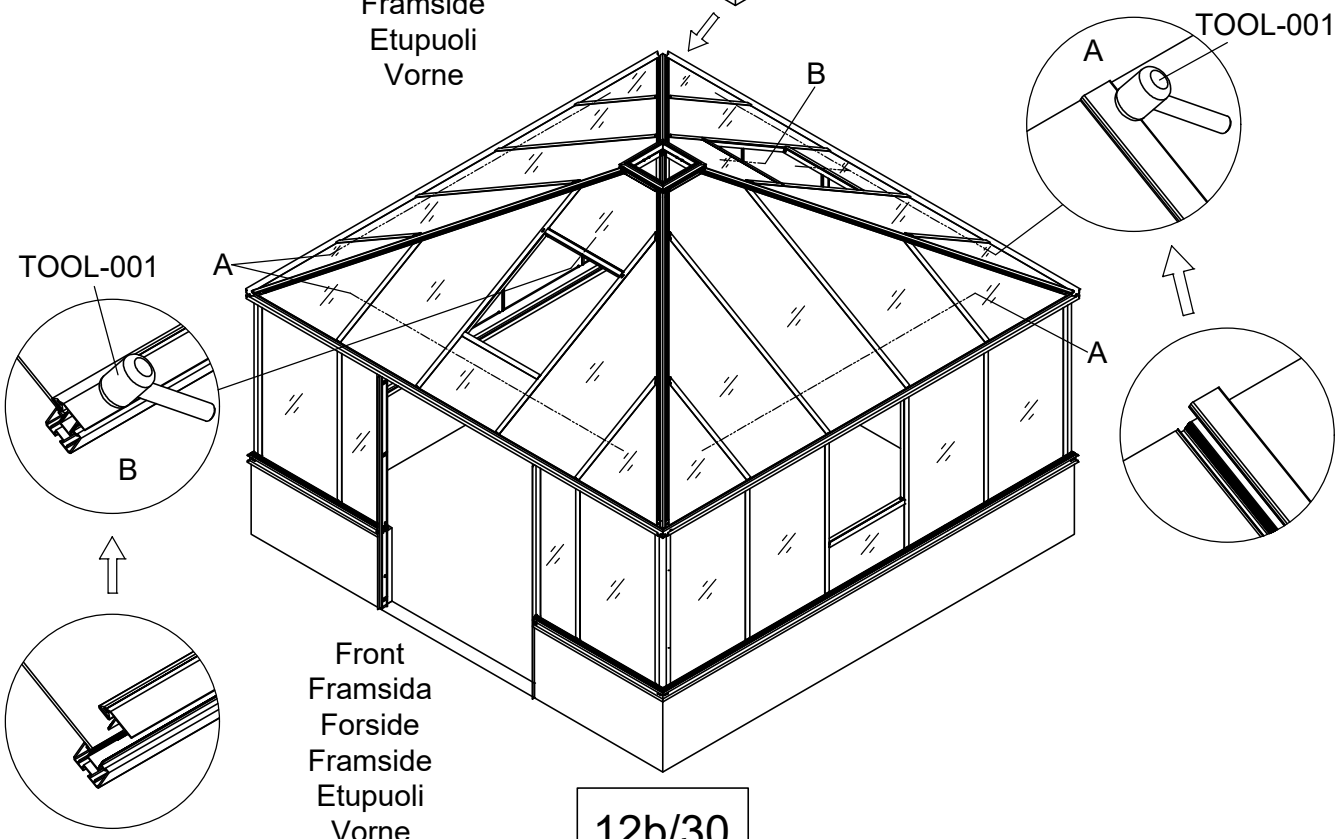

Part	NO.	QTY.	Length(MM)
	30X-Y08R-5	4	2673
	30X-Y08L-5	4	2673

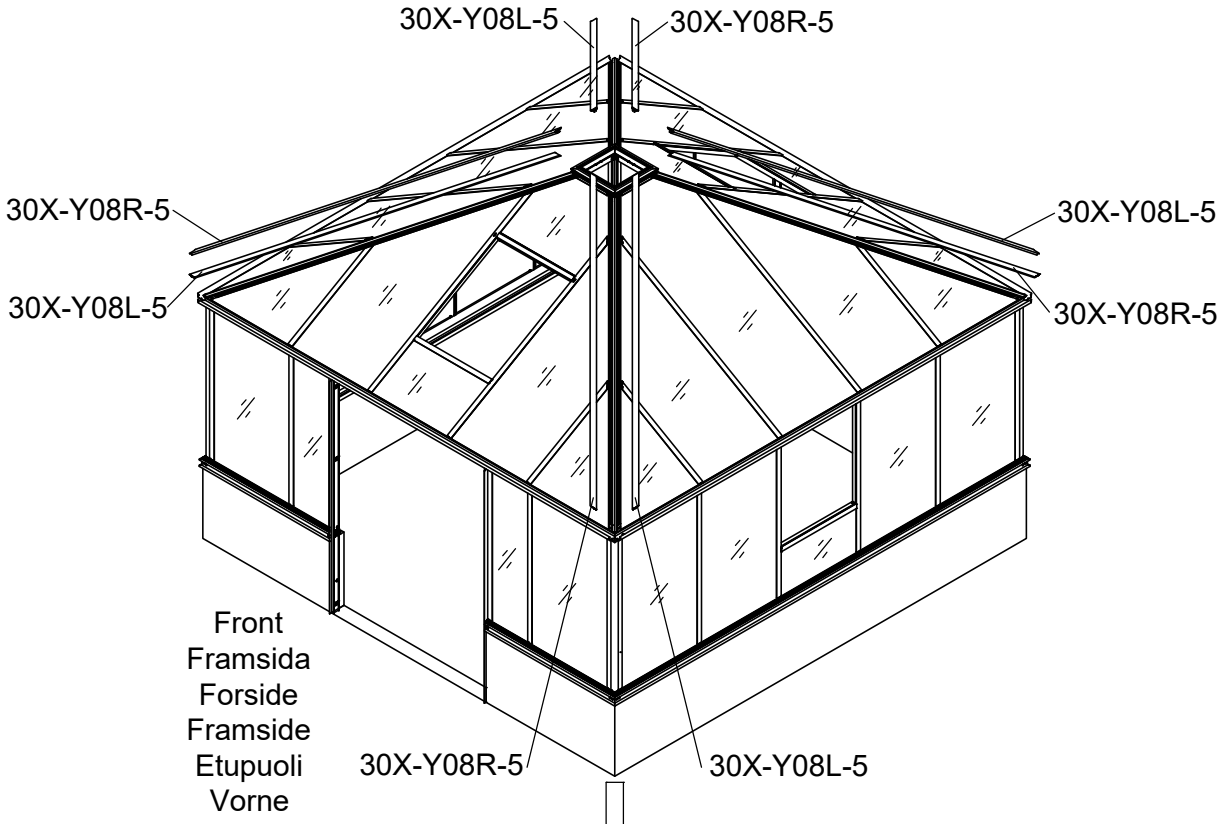

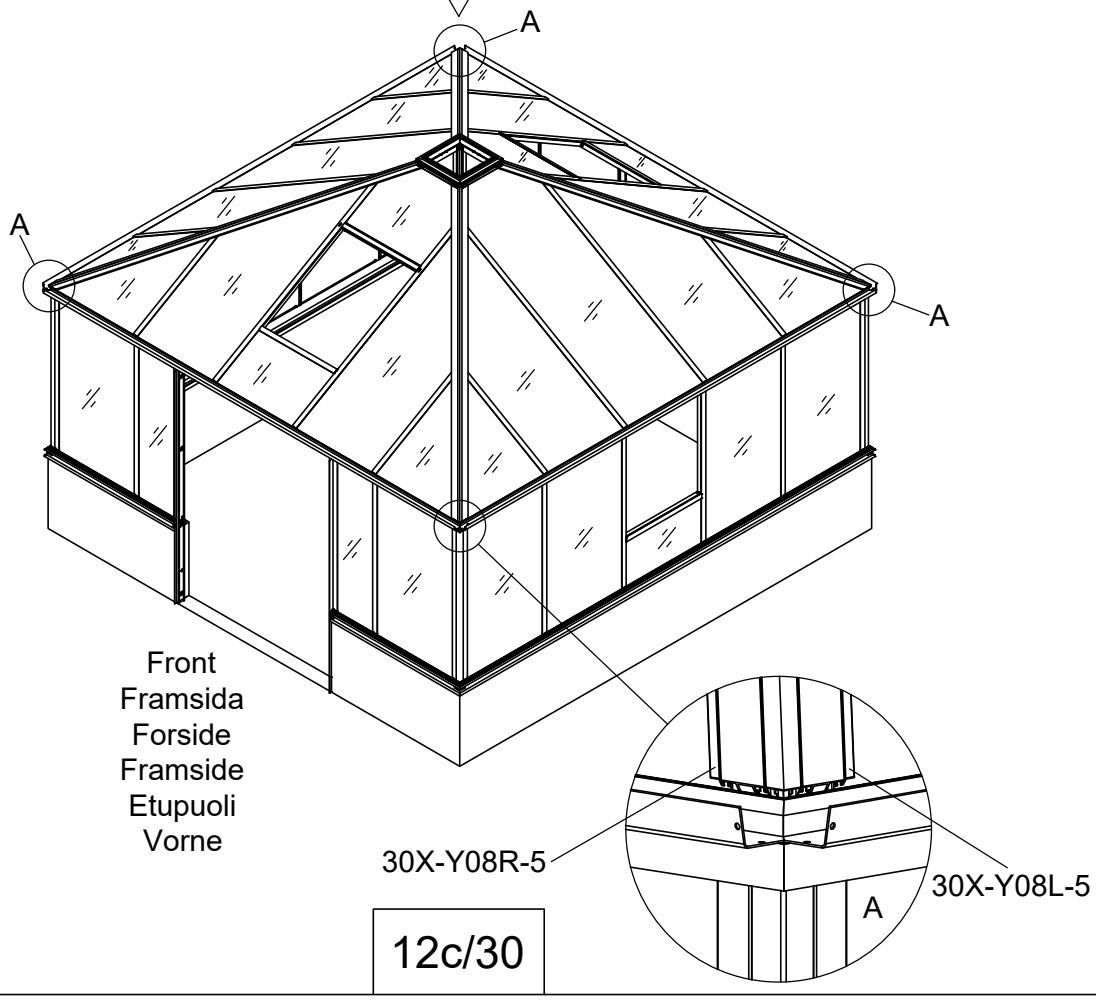

Part	NO.	QTY.	Length(MM)
	J08	1	PCS
	7C26-009A	1.2M	

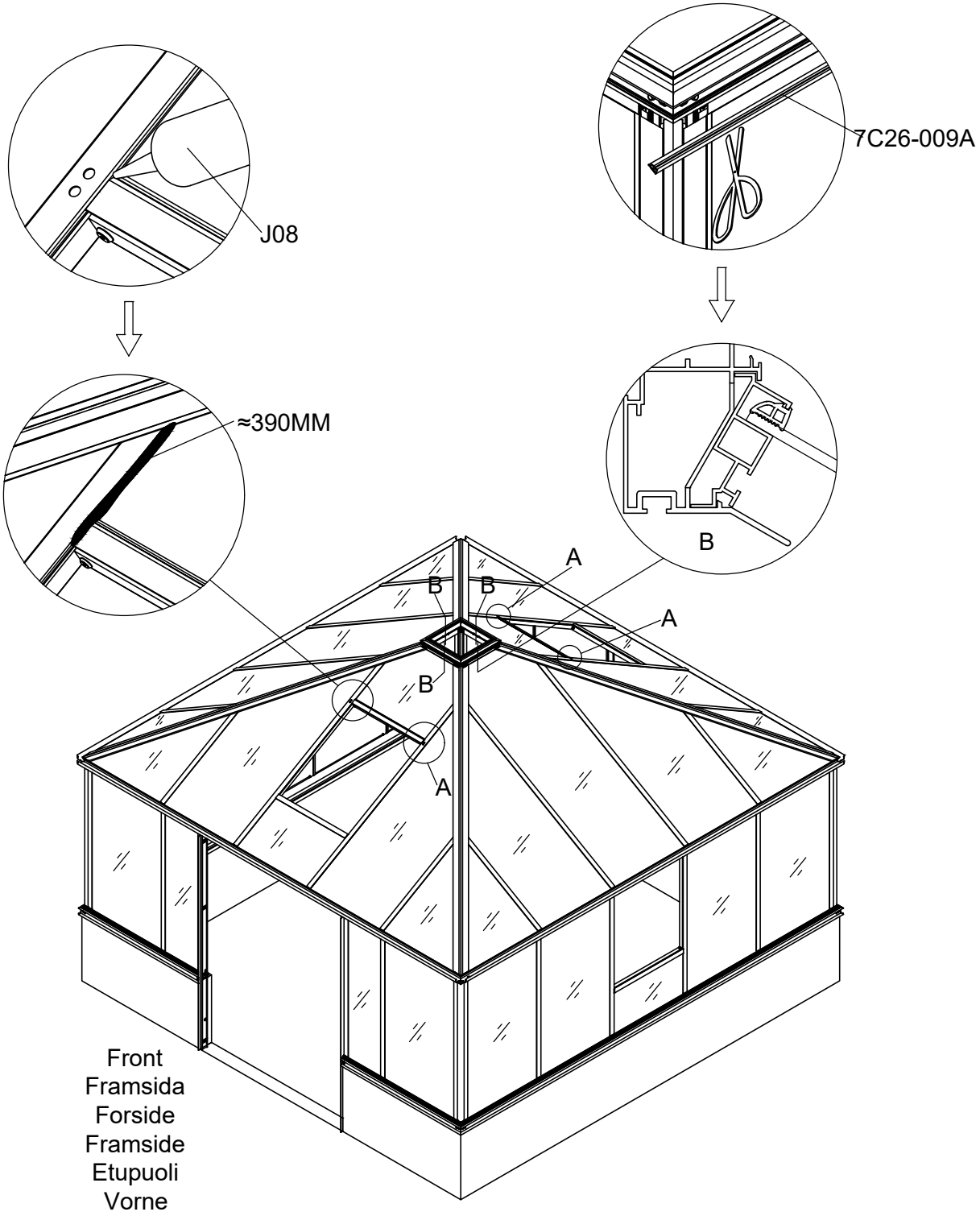

Part	NO.	QTY.	Length(MM)
	30X-Y63-A	4	452

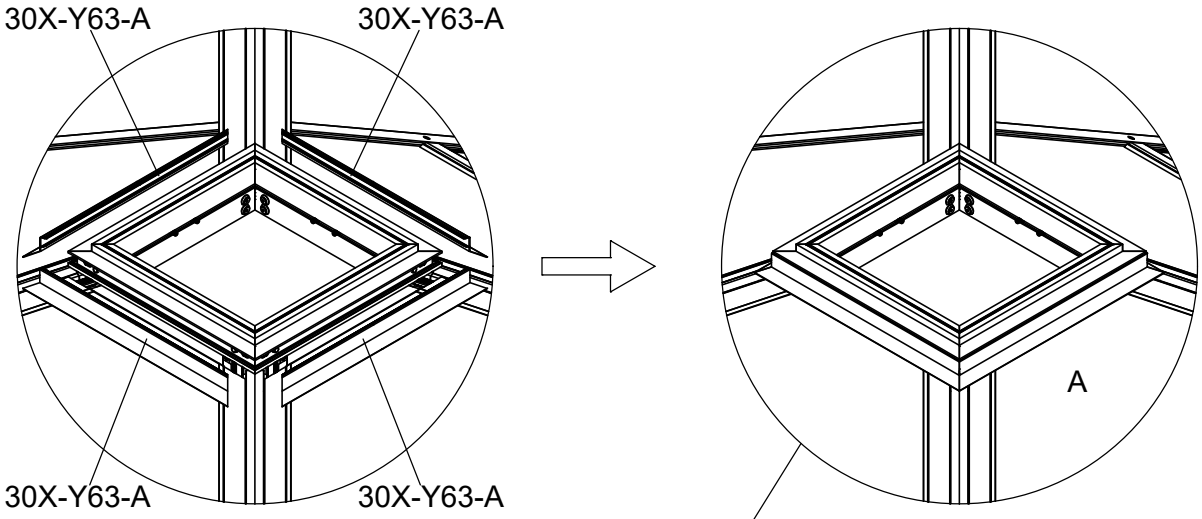

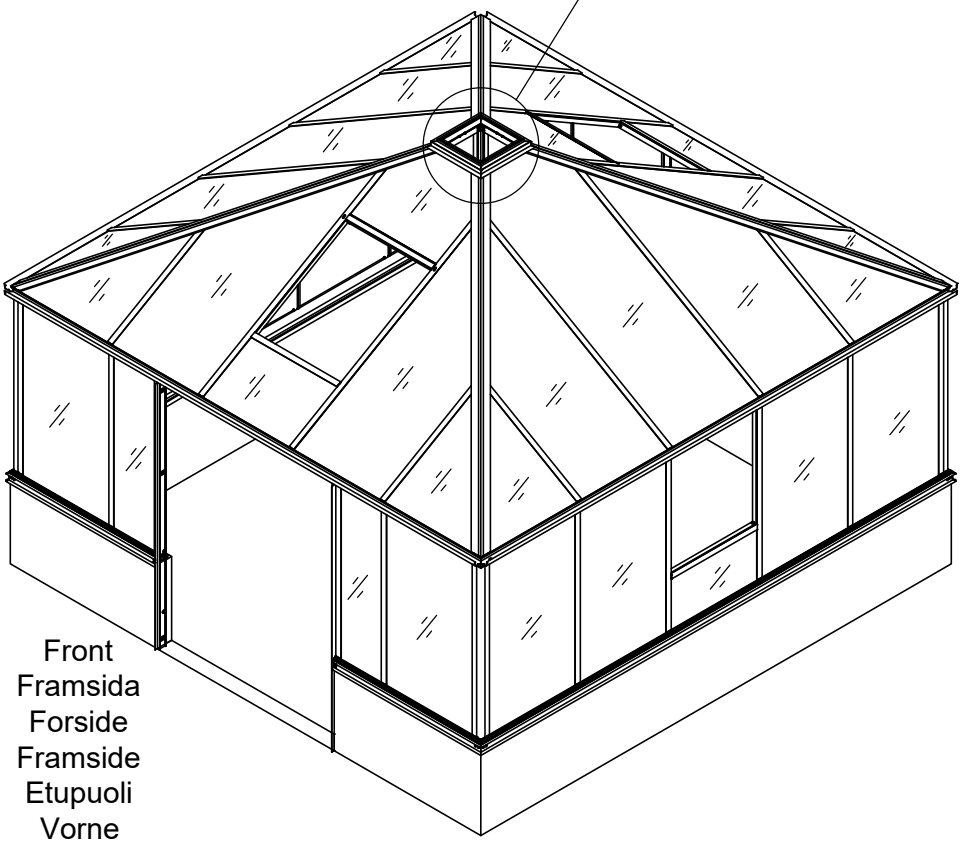

Part	NO.	QTY.	Length(MM)	CTN NO.
	40A-Y108R	1	693	3040P-HD
	40A-Y106	1	1872	3040P-HD
	40A-Y107R	1	1872	3040P-HD
	40A-Y109R	1	693	3040P-HD
	W07	4	37	3040P-HD
	W04	4	PCS	3040P-HD

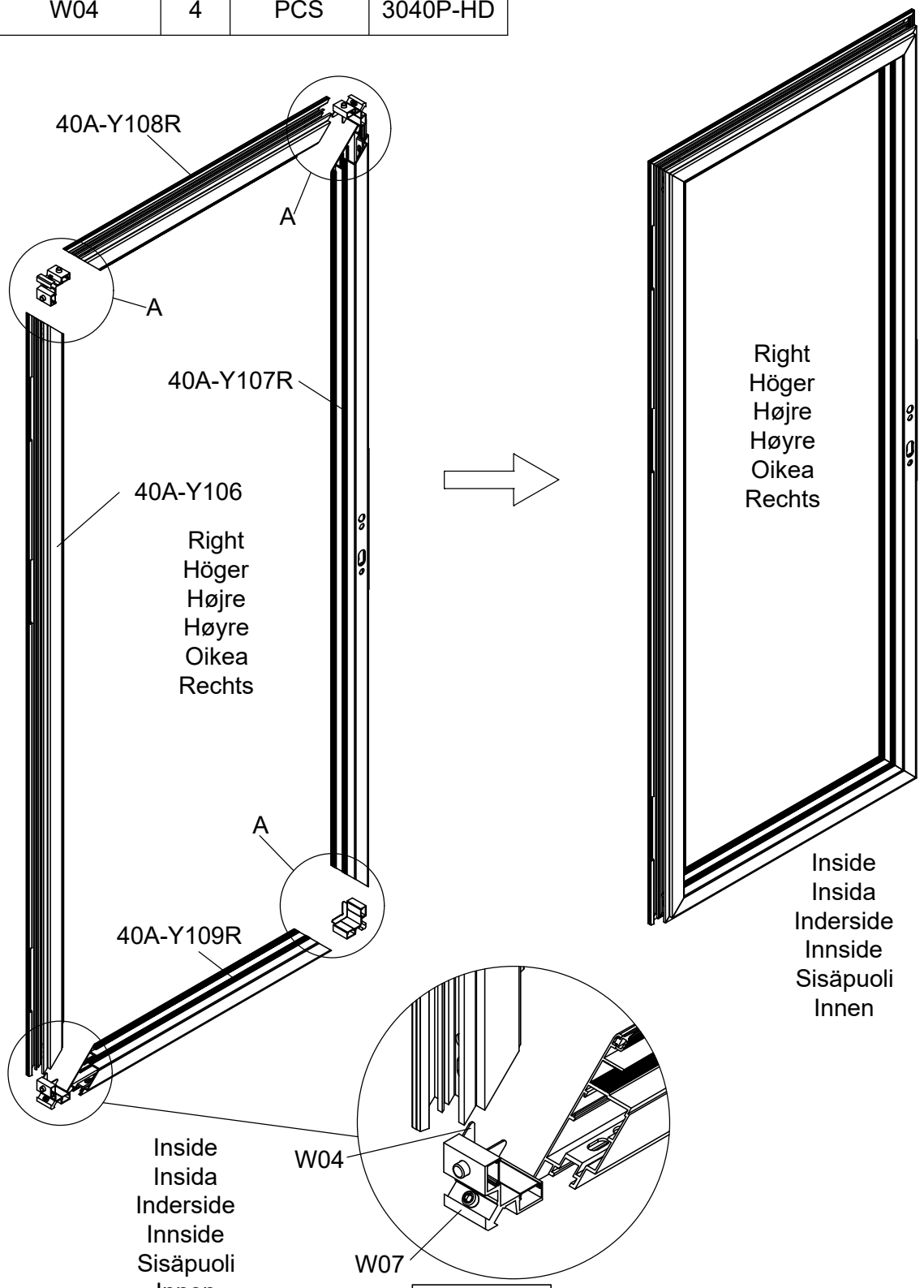

Part	NO.	QTY.	Length(MM)	CTN NO.
	40A-Y107L	1	1872	3040P-HD
	40A-Y115	2	766	3040P-HD
	T19	2	PCS	3040P-HD

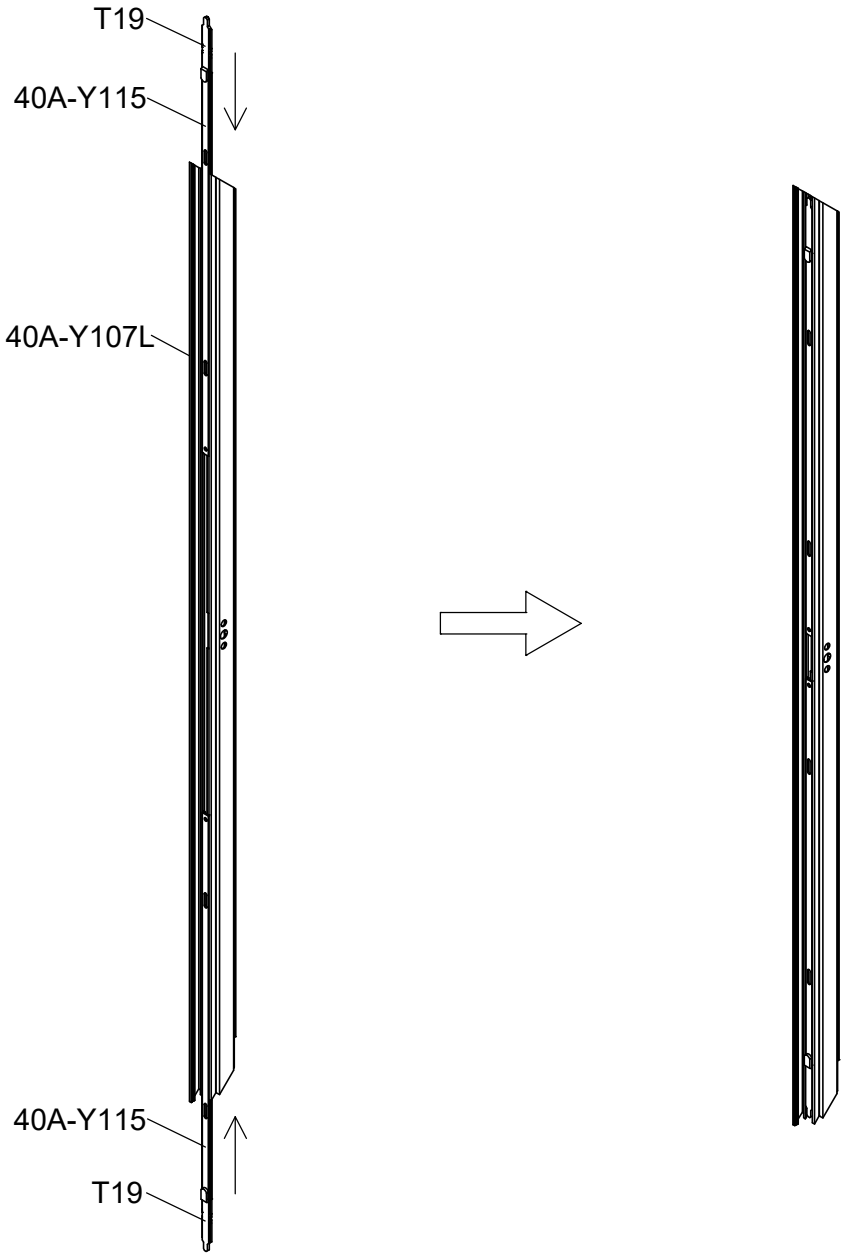

Part	NO.	QTY.	Length(MM)	CTN NO.
	40A-Y108L	1	693	3040P-HD
	40A-Y106	1	1872	3040P-HD
	40A-Y109L	1	693	3040P-HD
	W07	4	37	3040P-HD
	W04	4	PCS	3040P-HD

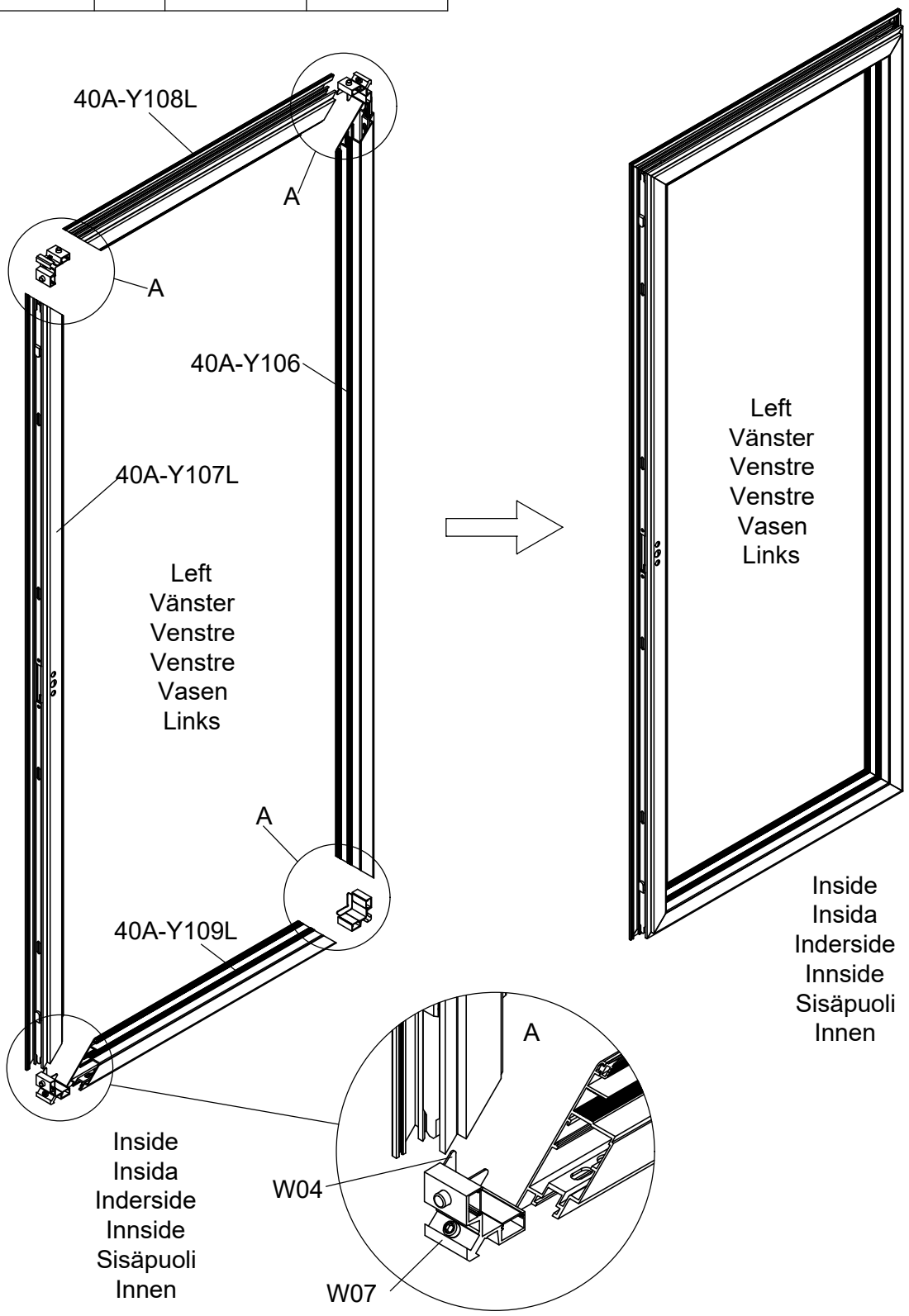

Part	NO.	QTY.	Length(MM)	CTN NO.
	40X-Y91-A3	1	PCS	3040P-HD
	Z3.5-25	2	PCS	3040P-HD

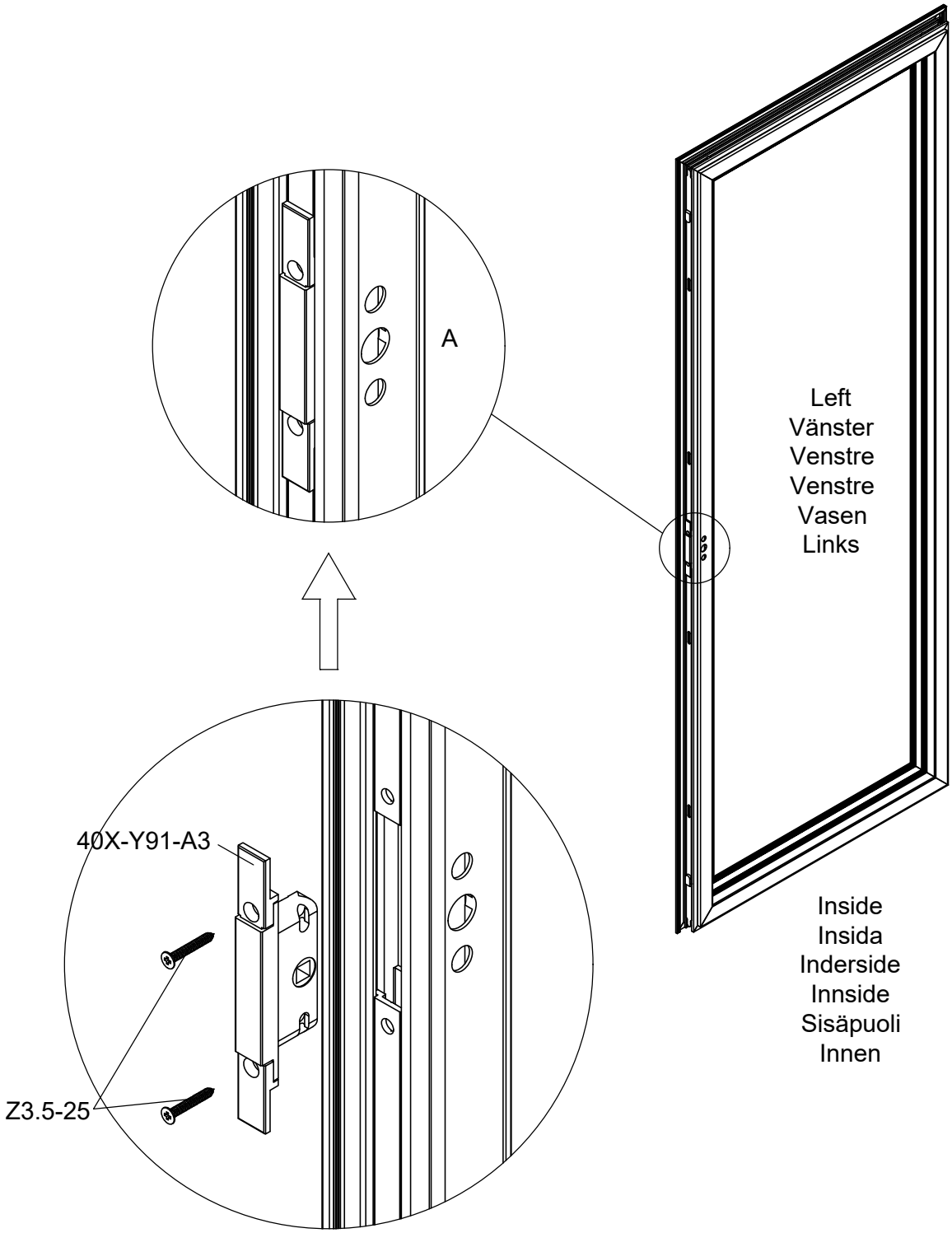

Part	NO.	QTY.	Length(MM)	CTN NO.
	40A-Y110	2	1748	3040P-HD
	40A-Y111	2	569	3040P-HD
	40A-Y112	2	1754	3040P-HD
	40A-Y113	2	576	3040P-HD
	539×1718	1	1718	

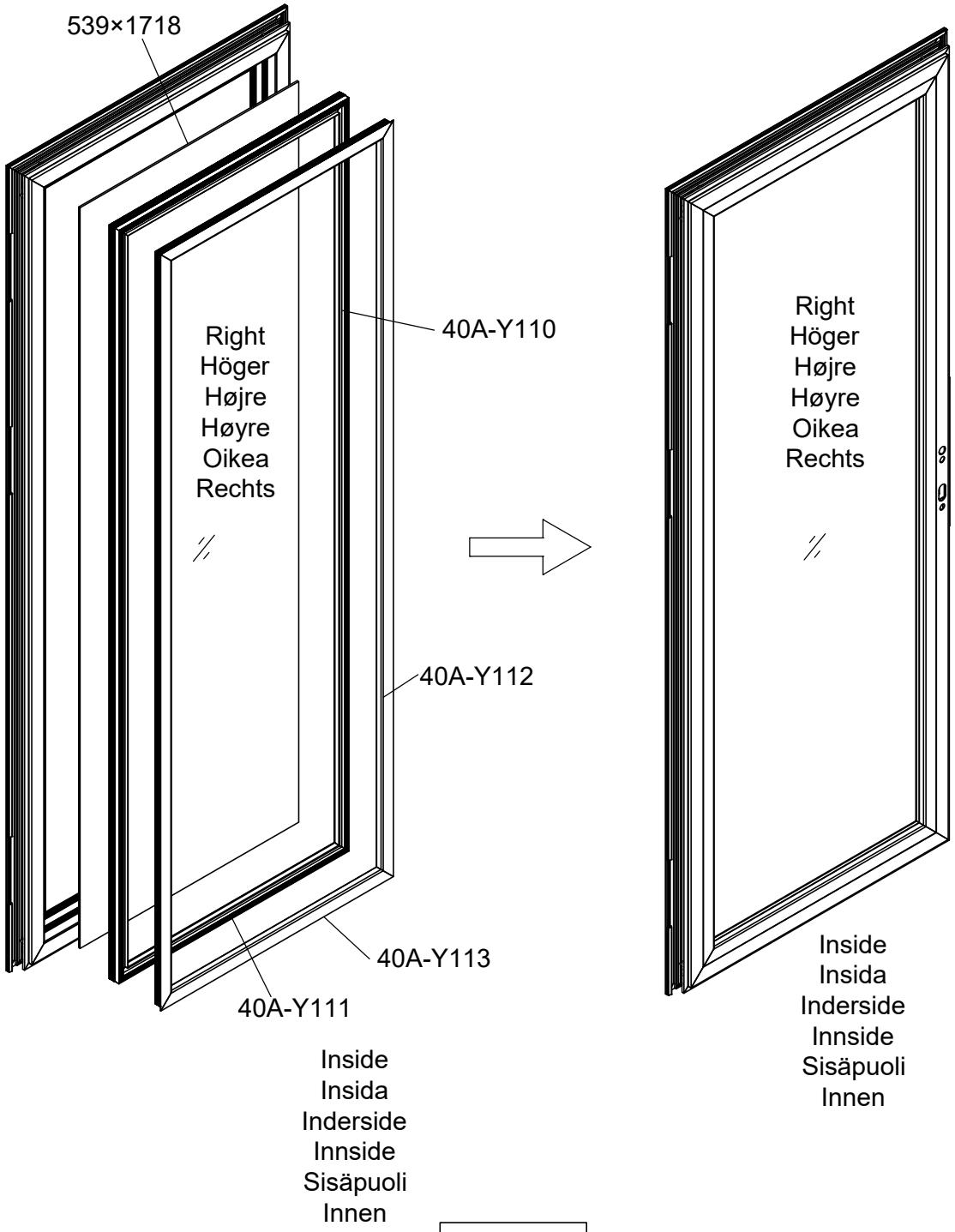

Part	NO.	QTY.	Length(MM)	CTN NO.
	40A-Y110	2	1748	3040P-HD
	40A-Y111	2	569	3040P-HD
	40A-Y112	2	1754	3040P-HD
	40A-Y113	2	576	3040P-HD
	539×1718	1	1718	

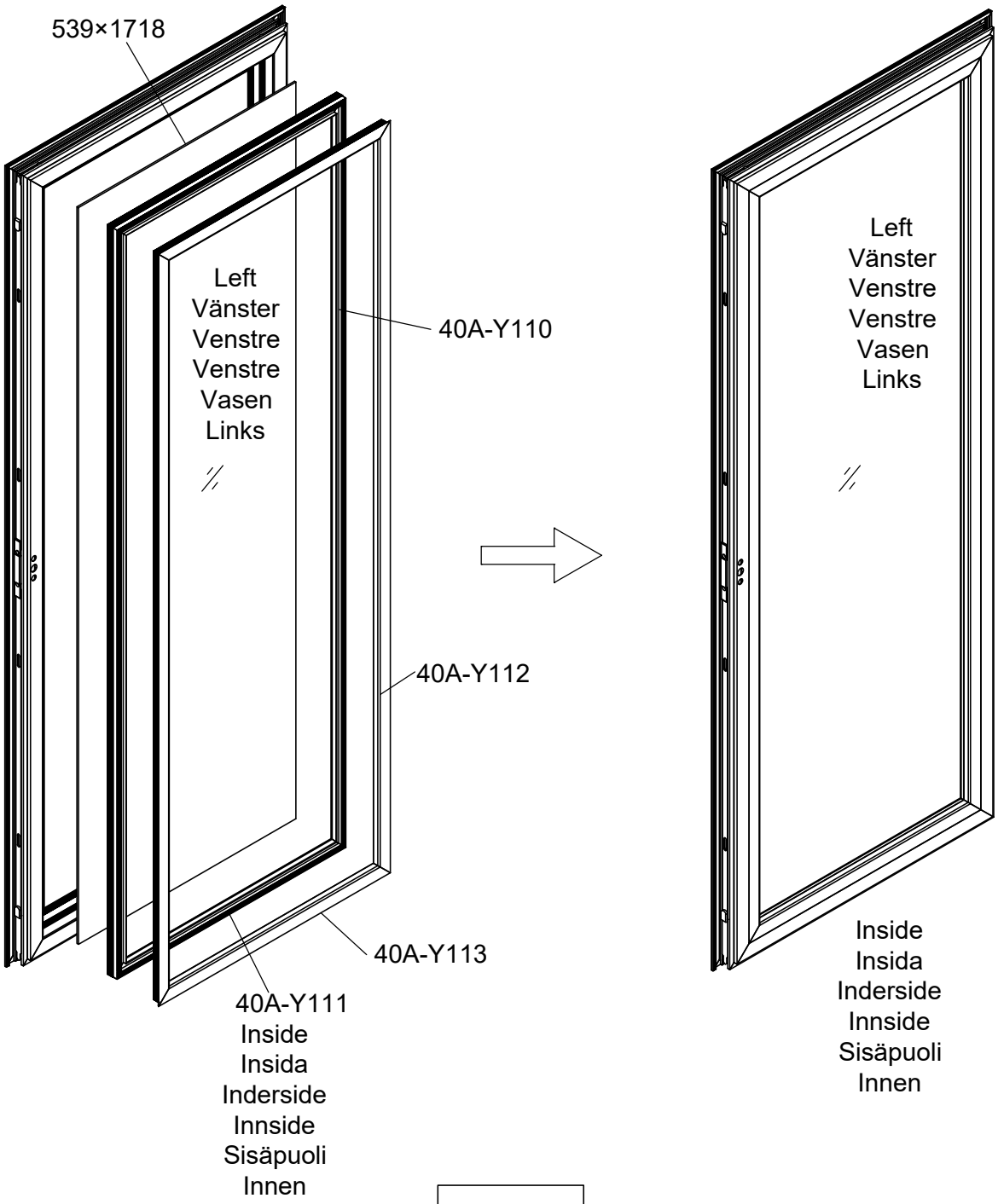

Part	NO.	QTY.	Length(MM)	CTN NO.
	40A-Y114	1	1817	3040P-HD
	Z4.2-38	4	PCS	3040P-HD
	7C28-004	4	PCS	3040P-HD

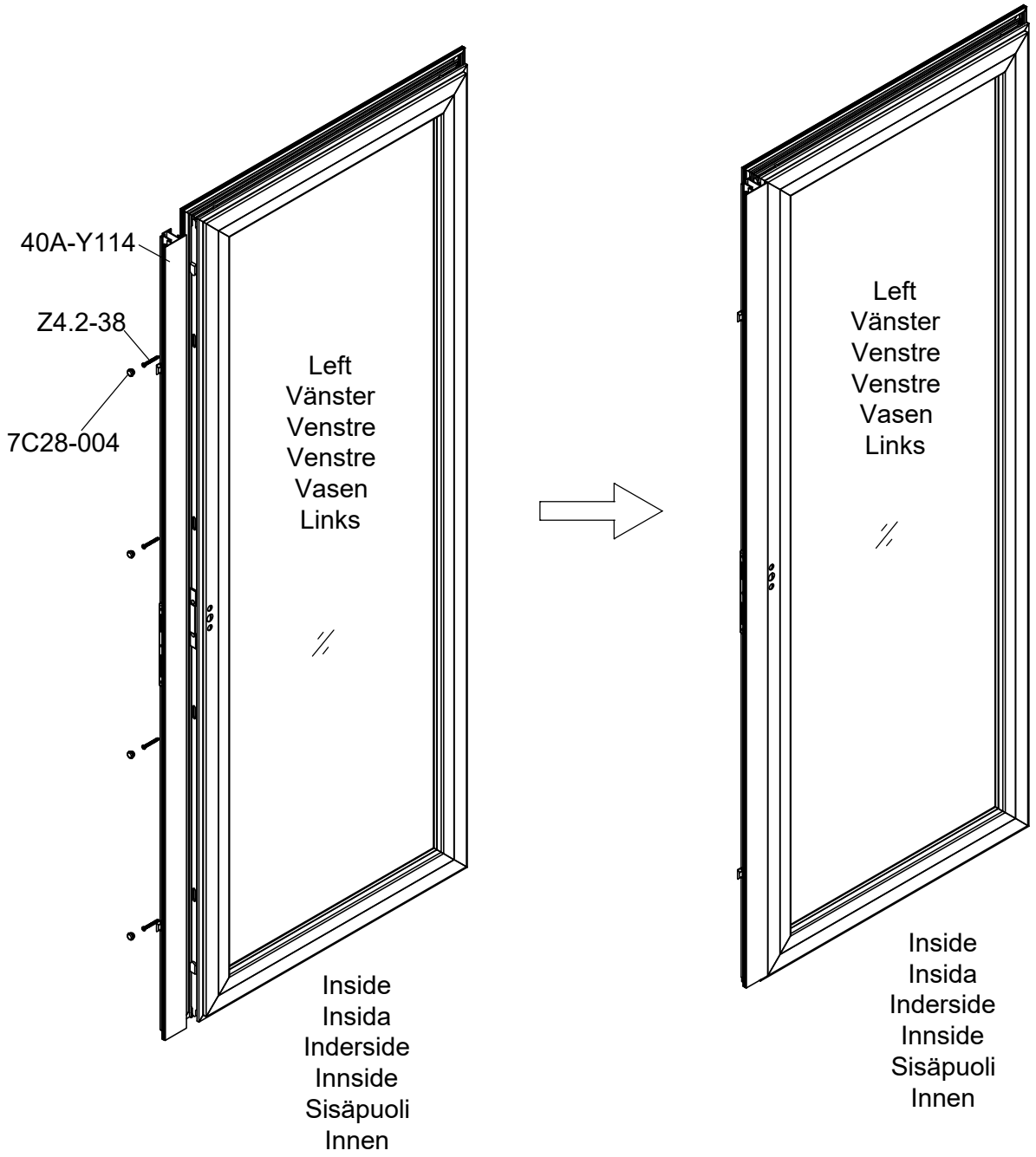

Part	NO.	QTY.	Length(MM)	CTN NO.
	T11R-1	3	PCS	3040P-HD
	T11R-2	3	PCS	3040P-HD
	T11L-1	3	PCS	3040P-HD
	T11L-2	3	PCS	3040P-HD

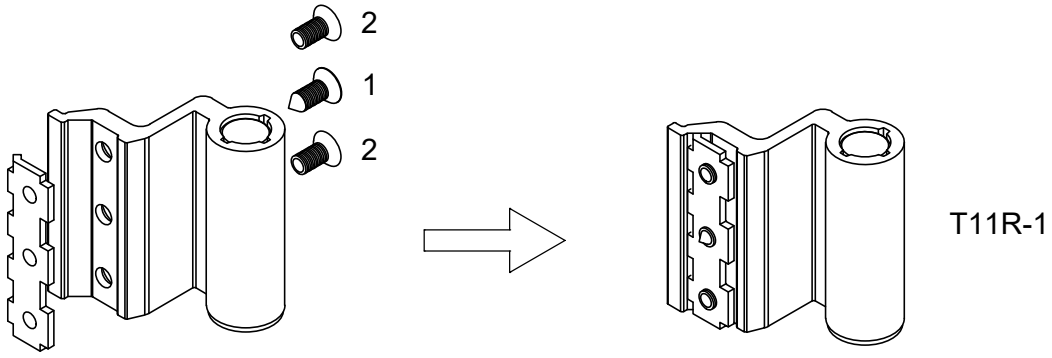

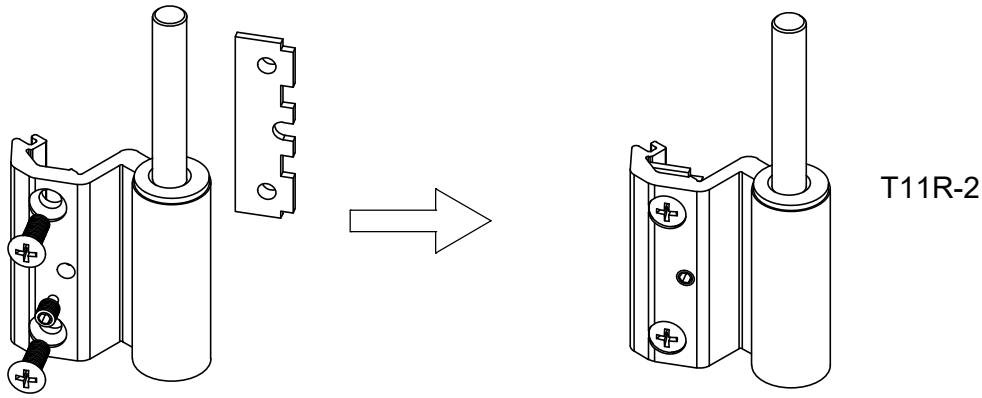

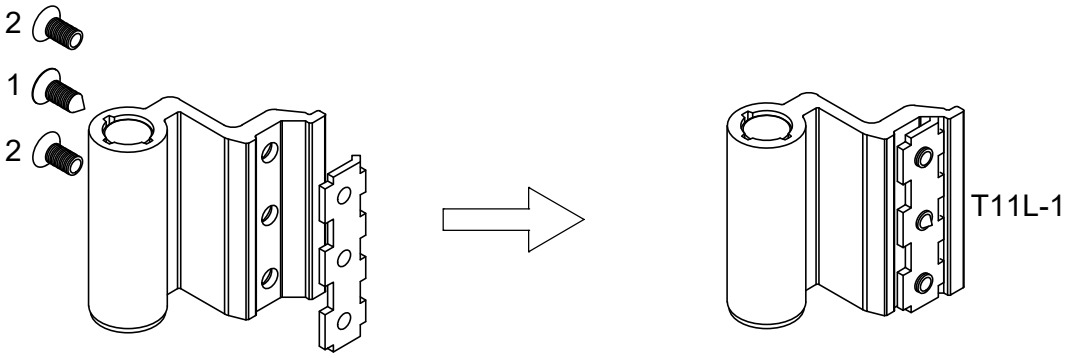

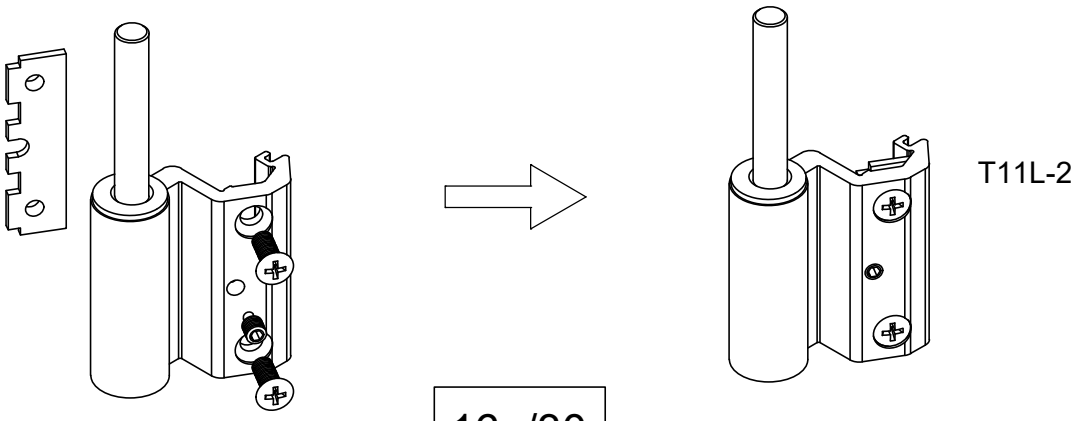

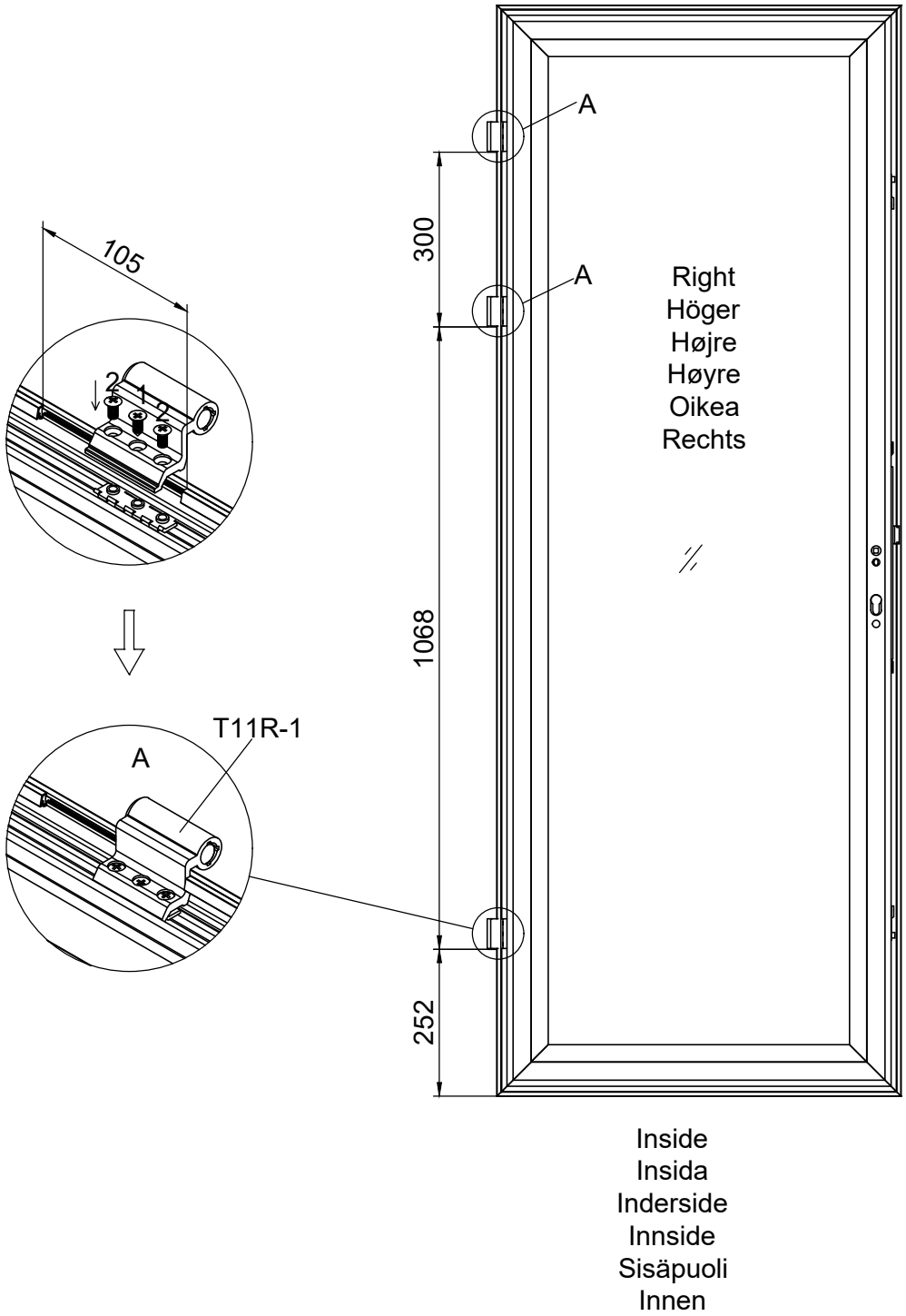
A
A
300
105
2
1
2
Right
Höger
Højre
Høyre
Oikea
Rechts
1068
T11R-1
A
252
Inside
Insida
Inderside
Innside
Sisäpuoli
Innen

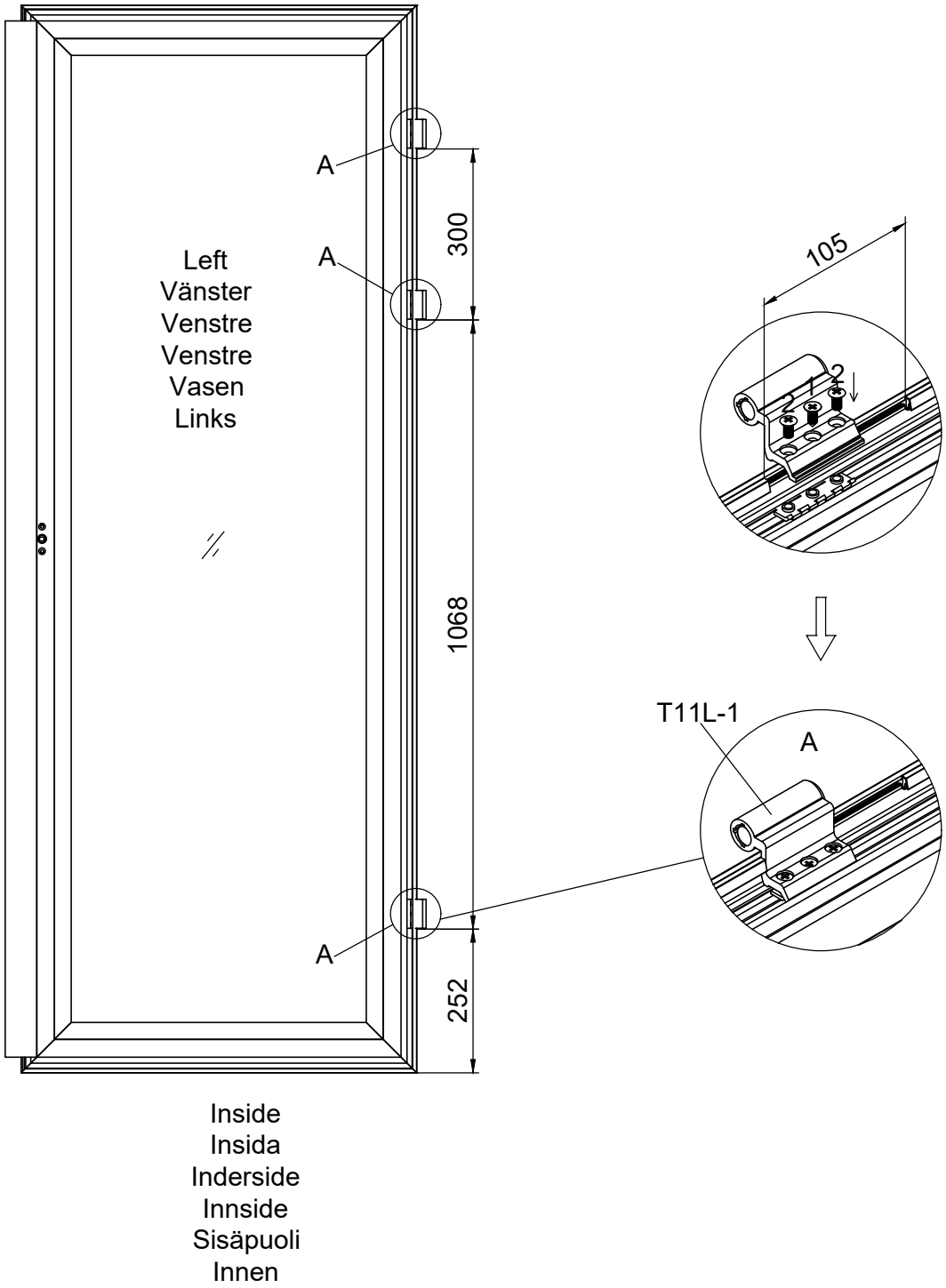
A
A
A
300
1068
252
Left
Vänster
Venstre
Venstre
Vasen
Links
105
2
1
2
T11L-1
A
Inside
Insida
Inderside
Innside
Sisäpuoli
Innen

Part	NO.	QTY.	Length(MM)	CTN NO.
	40A-Y102L	1	1910	3040P-HD
	40A-Y102R	1	1910	3040P-HD
	Ma6-12	4	PCS	3040P-HD
	M6	4	PCS	3040P-HD

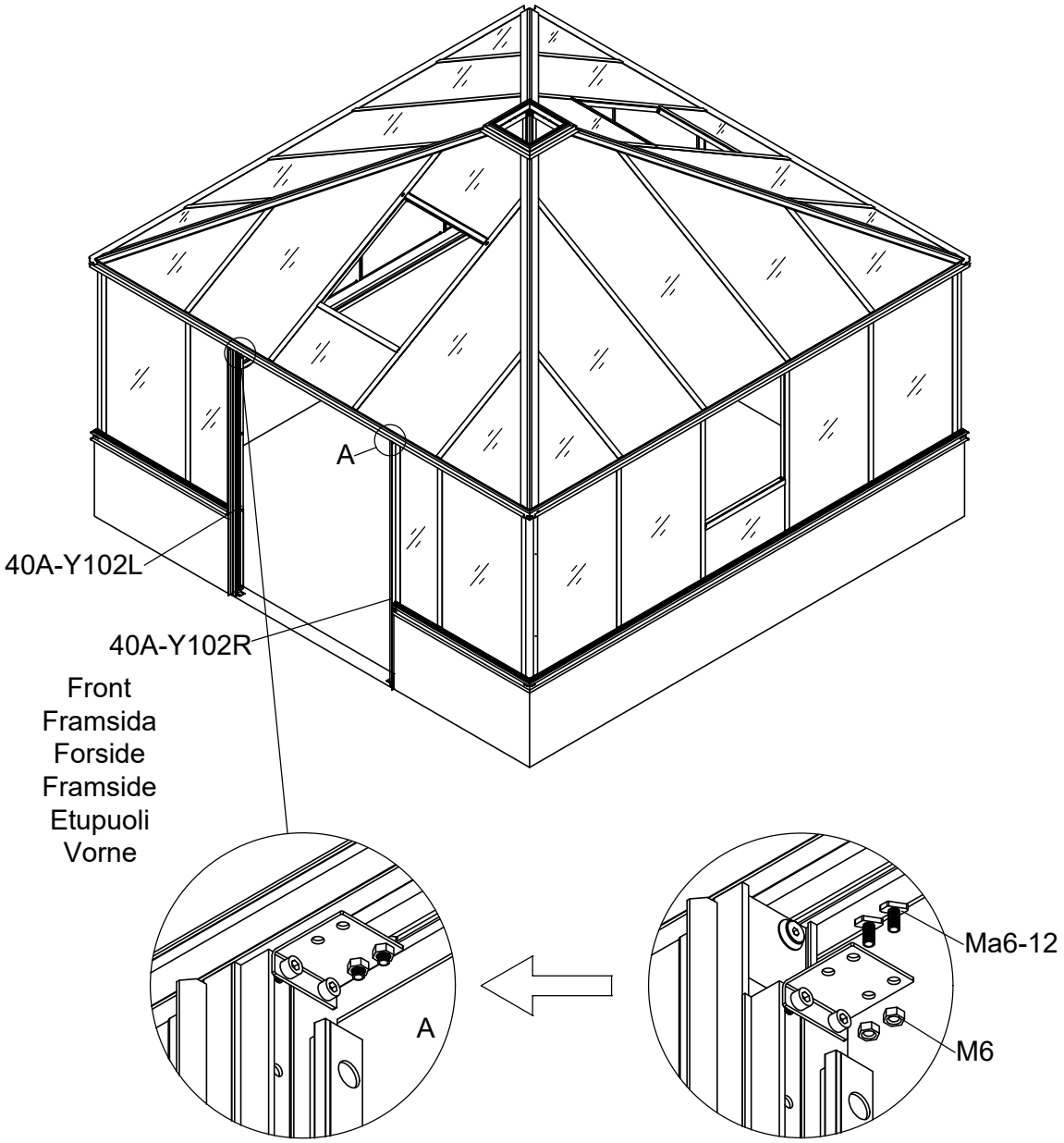

Part	NO.	QTY.	Length(MM)	CTN NO.
	7C33-001	8	PCS	3040P-HD
	M6-35	8	PCS	3040P-HD
	My6-30	8	PCS	3040P-HD

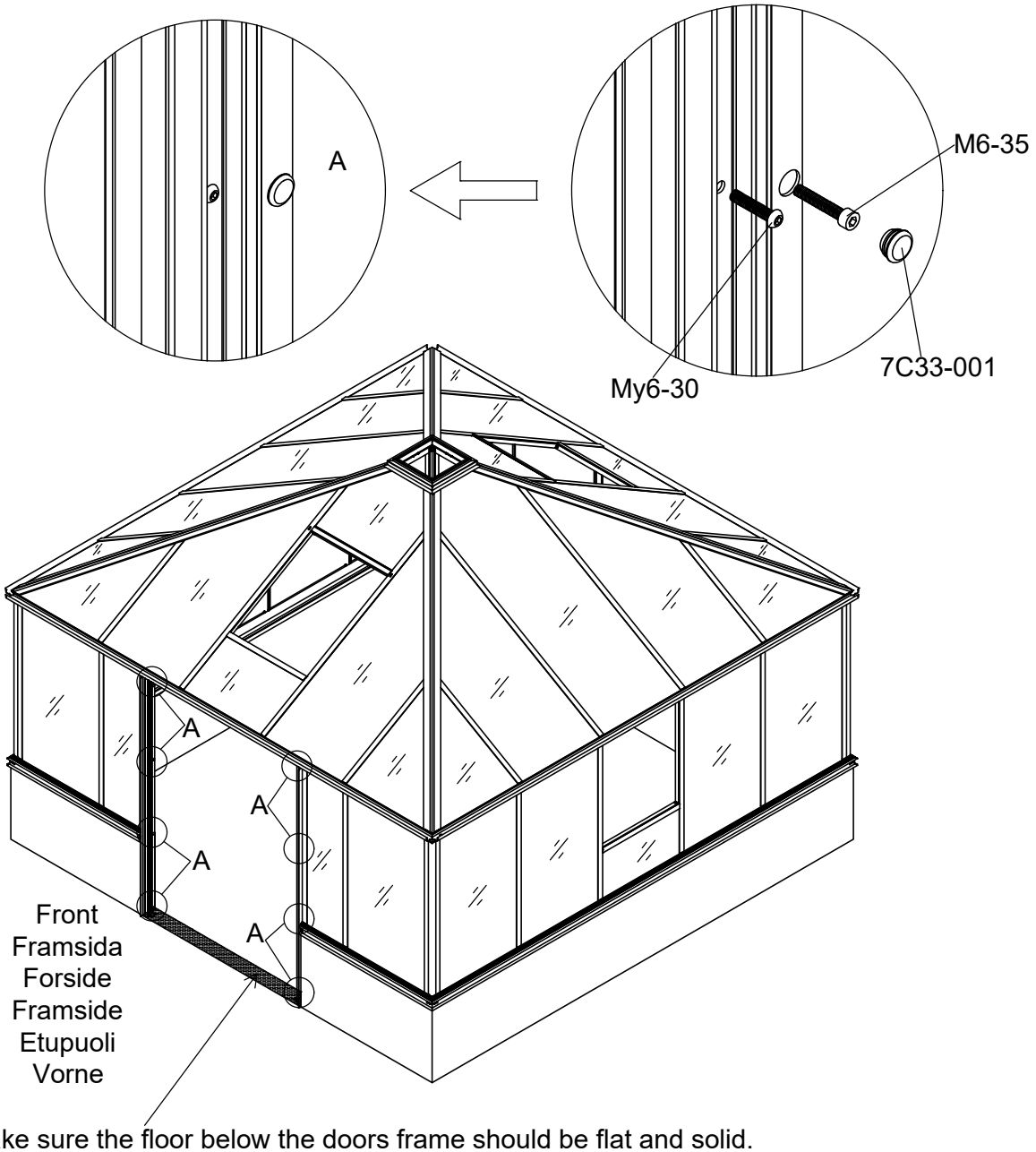

Make sure the floor below the doors frame should be flat and solid.
Se till att underlaget under dörrramen är plan och på solid grund.
Sørg for, at underlaget under dørkarmen er plan og på fast grund.
Sørg for at underlaget under dørterskelen er slett og på solid fundament.
Tarkista, että maa ovikarmin alla on sileä ja tasainen.
Achten Sie darauf, dass der Boden unter dem Türrahmen eben und fest ist.

Part	NO.	QTY.	Length(MM)	CTN NO.
	7B26-122	2	PCS	3040P-HD
	Ma6-12	4	PCS	3040P-HD
	M6	4	PCS	3040P-HD

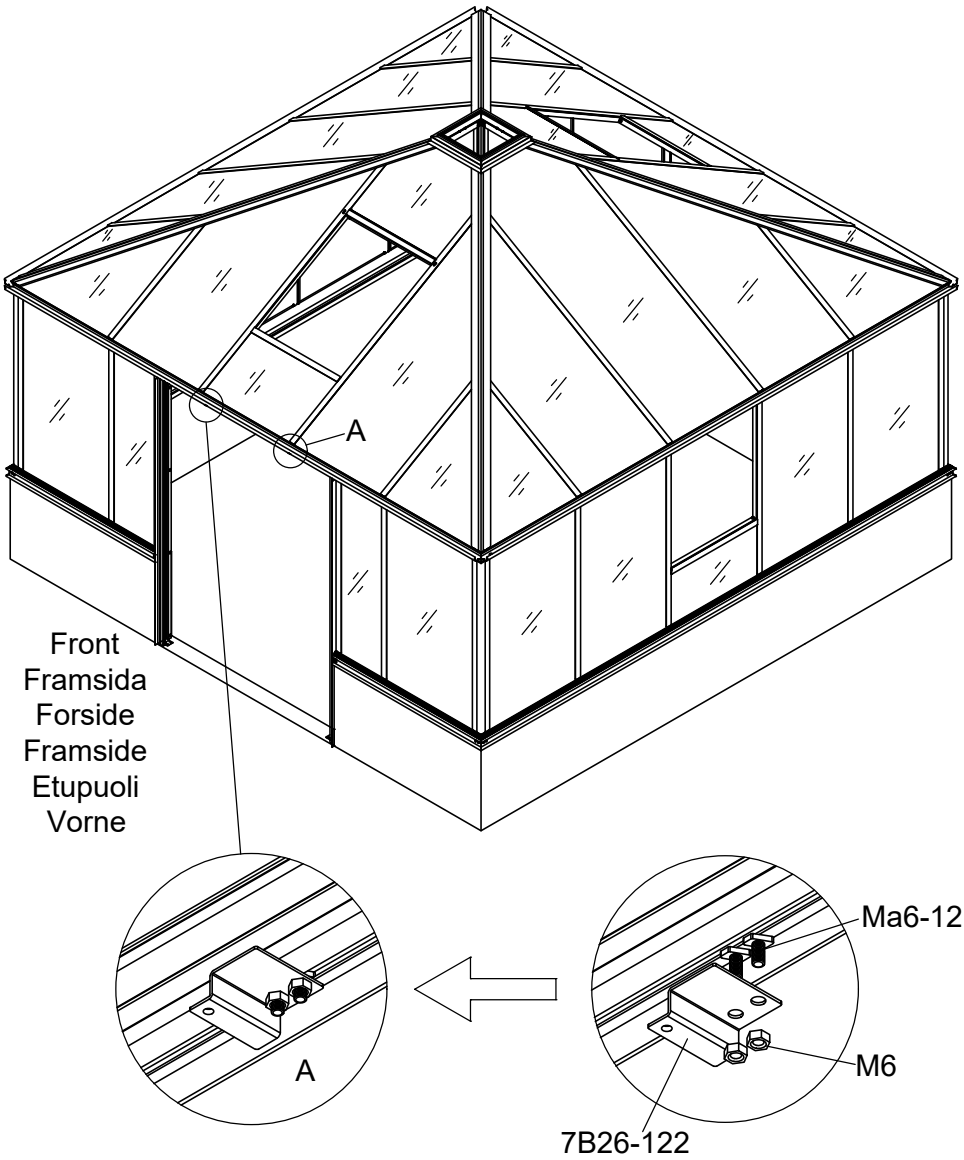

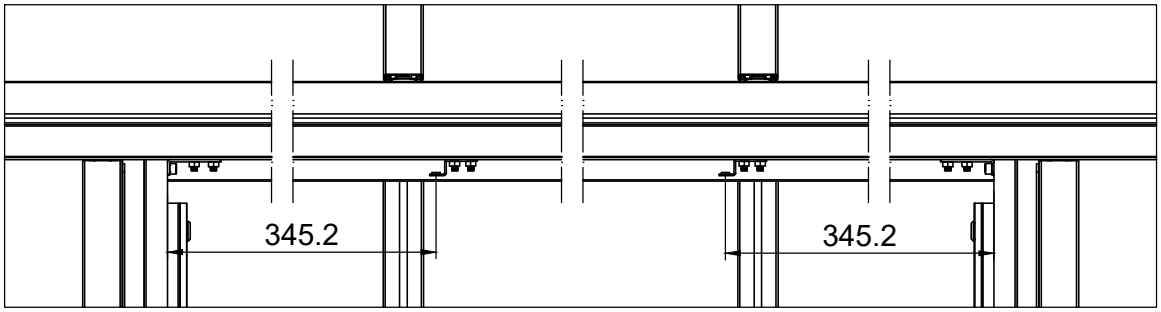

Part	NO.	QTY.	Length(MM)	CTN NO.
	40A-Y103	1	1380	3040P-HD
	40A-Y104	1	1380	3040P-HD
	40A-Y105	1	1380	3040P-HD
	My6-10	4	PCS	3040P-HD
	Si5-16	2	PCS	3040P-HD

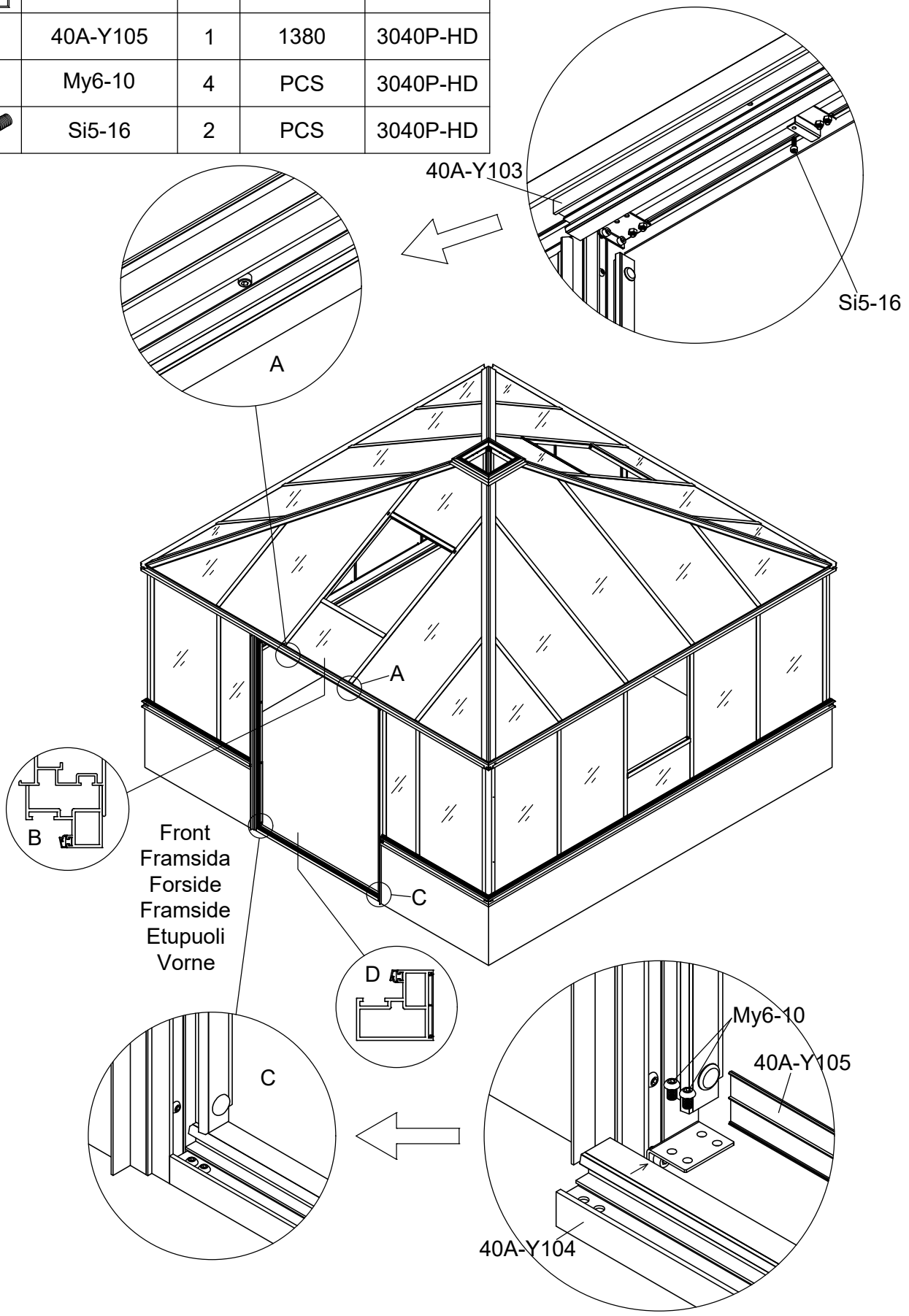

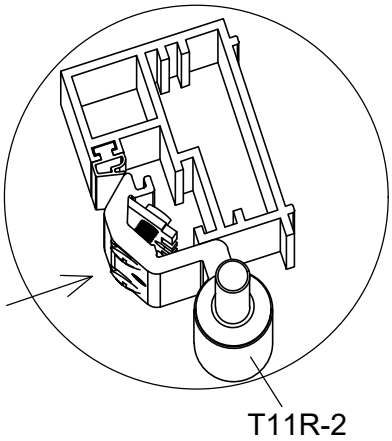

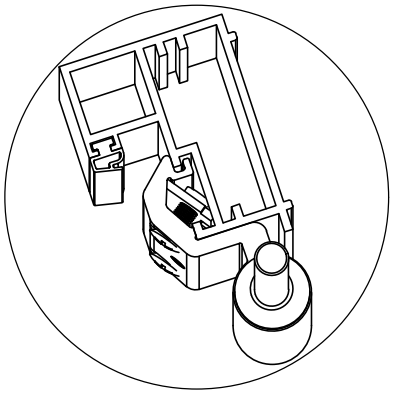

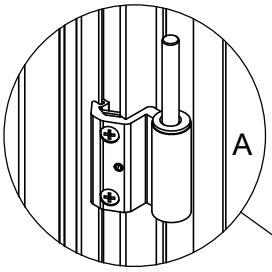

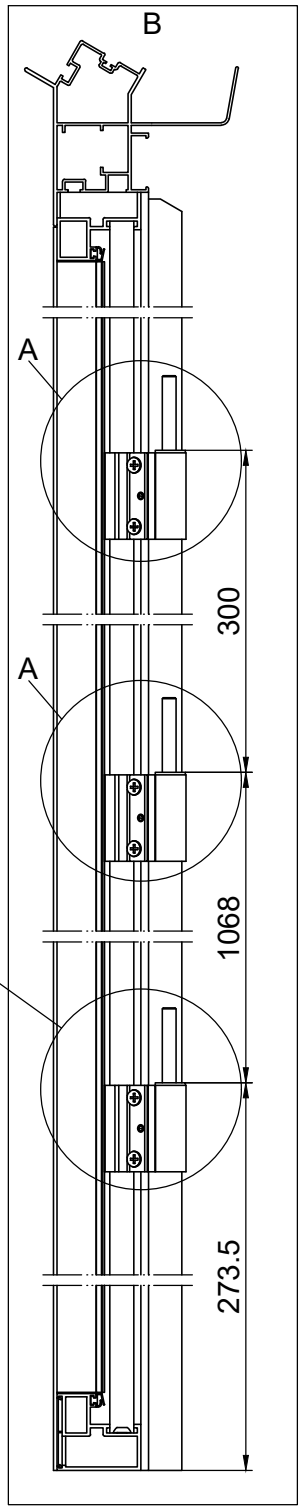

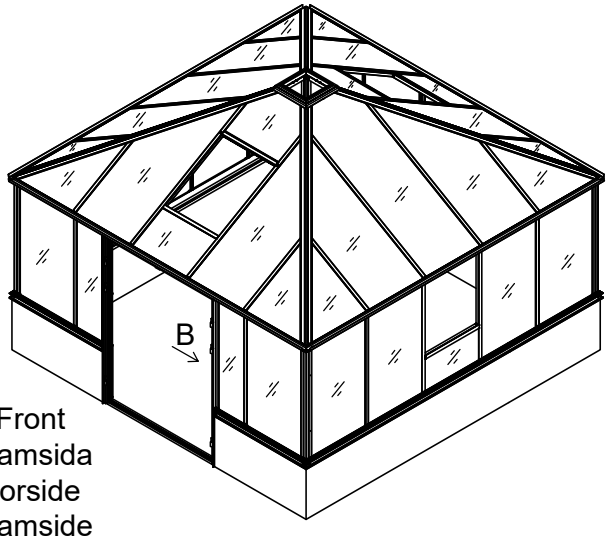

Front
Framsida
Forside
Framside
Etupuoli
Vorne

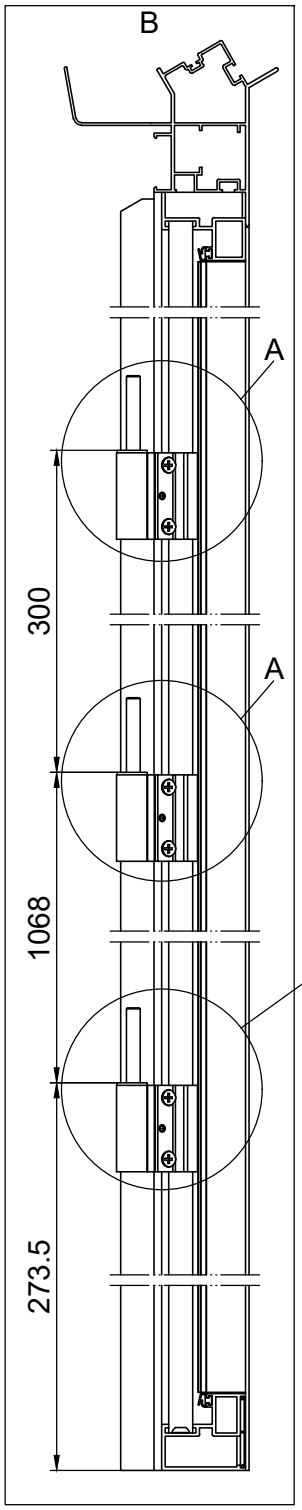
B
A
A
300
1068
273.5

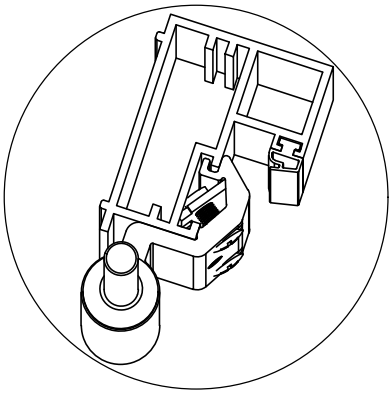

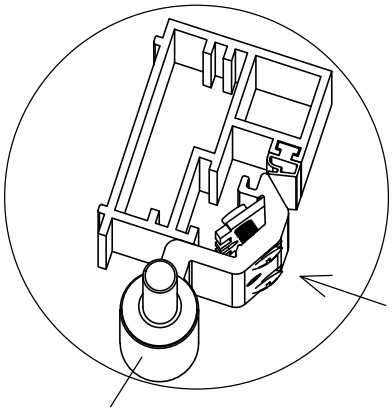
T11L-2

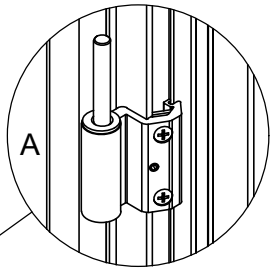
A

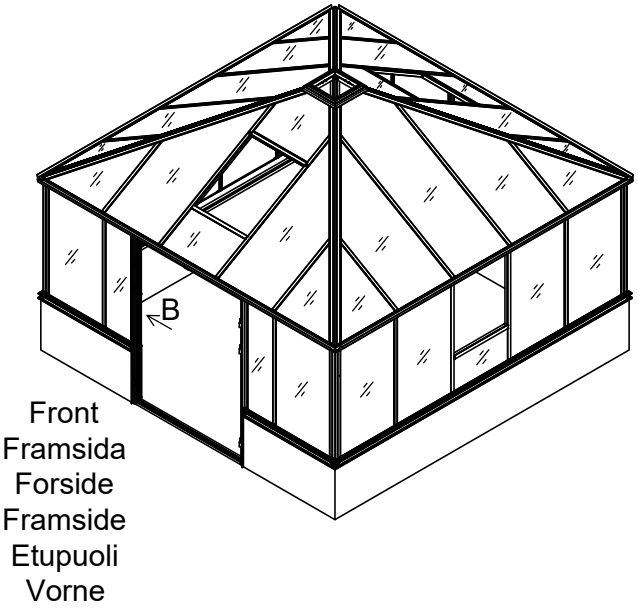
B
Front
Framsida
Forside
Framside
Etupuoli
Vorne

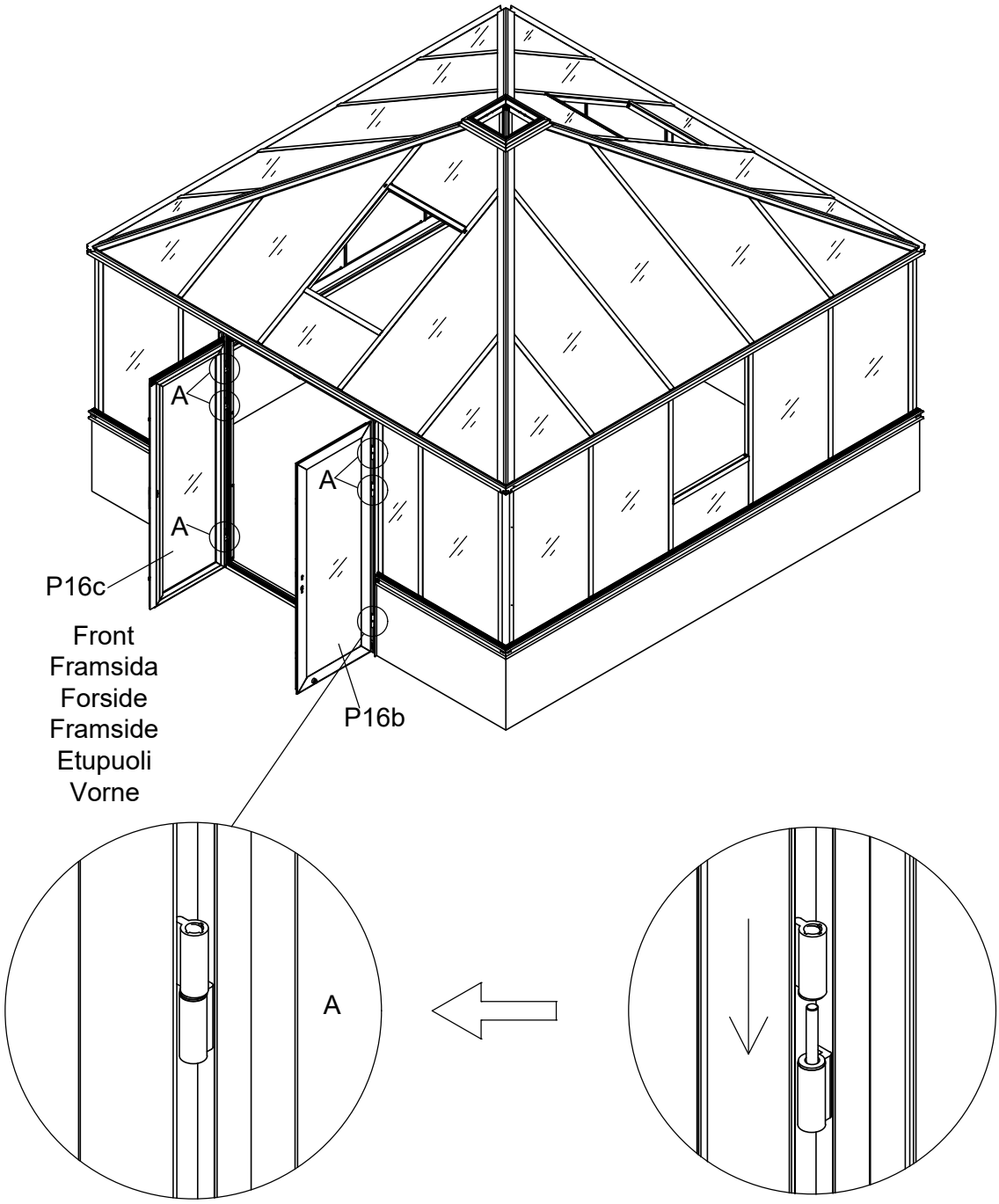
A
A
A
P16c
Front
Framsida
Forside
Framside
Etupuoli
Vorne
P16b
A

Part	NO.	QTY.	Length(MM)	CTN NO.
	T16	1	PCS	3040P-HD
	Mc5-35	2	PCS	3040P-HD

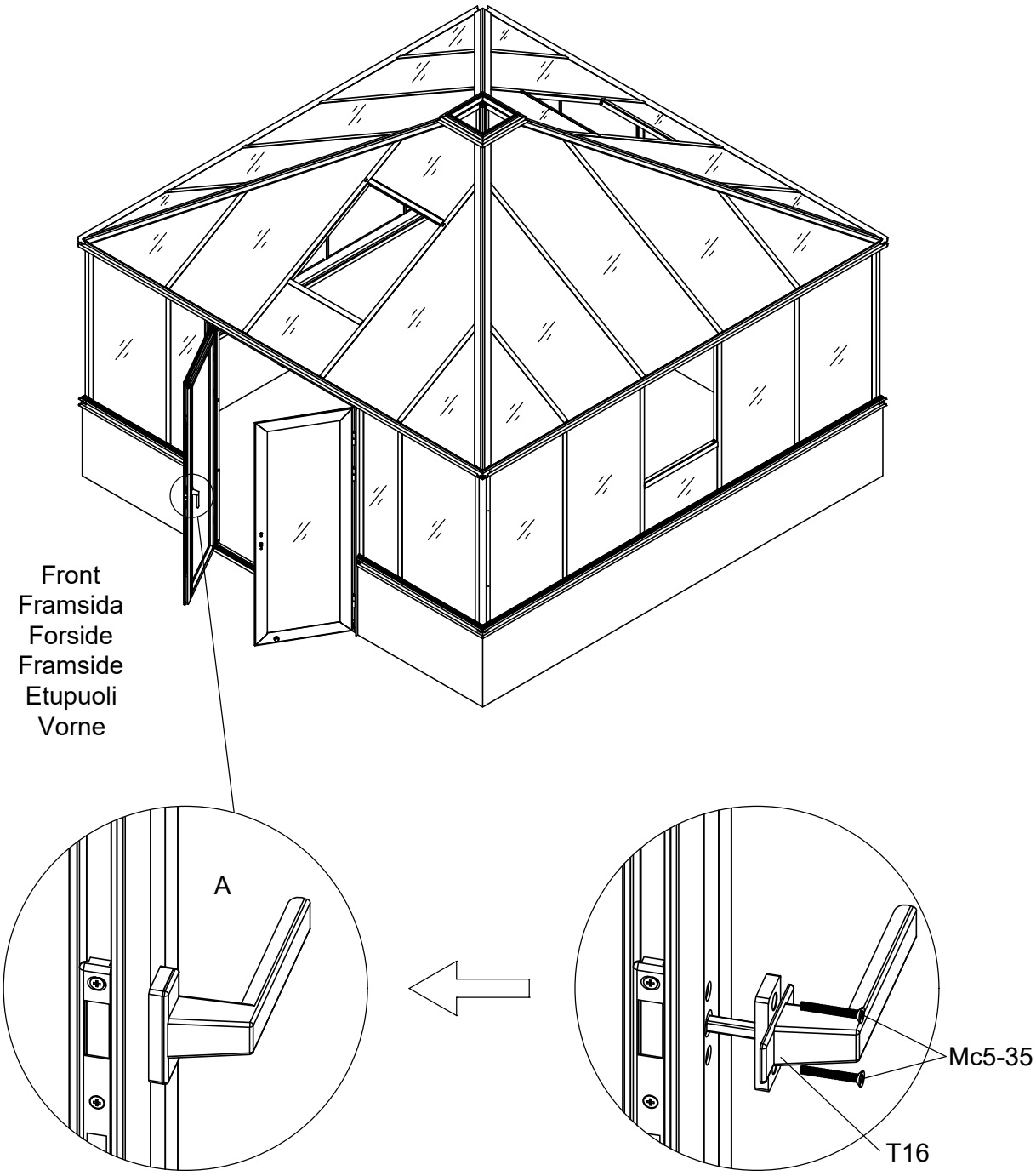

Part	NO.	QTY.	Length(MM)	CTN NO.
	T14	1	PCS	3040P-HD

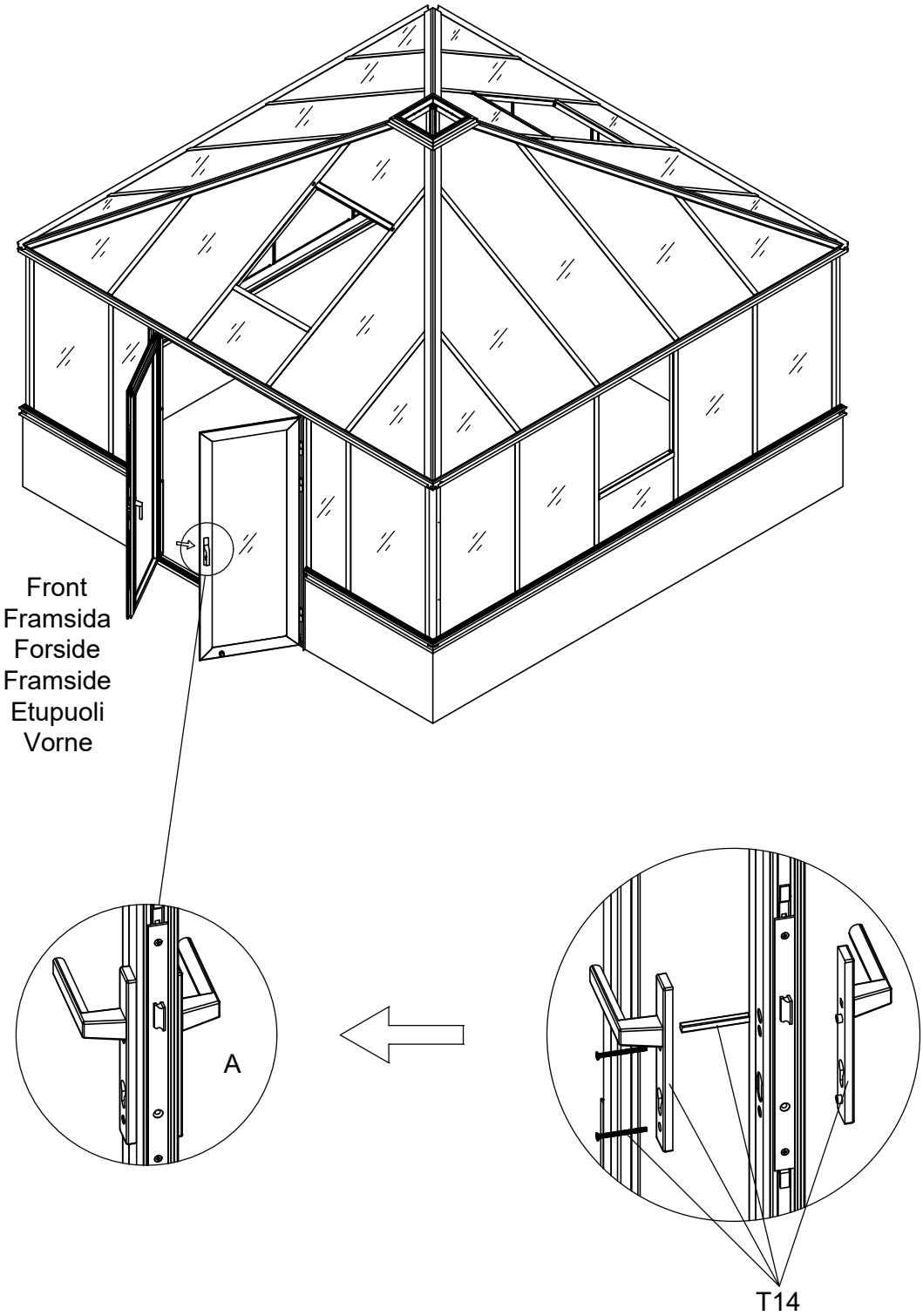

Part	NO.	QTY.	Length(MM)	CTN NO.
	T15	1	PCS	3040P-HD

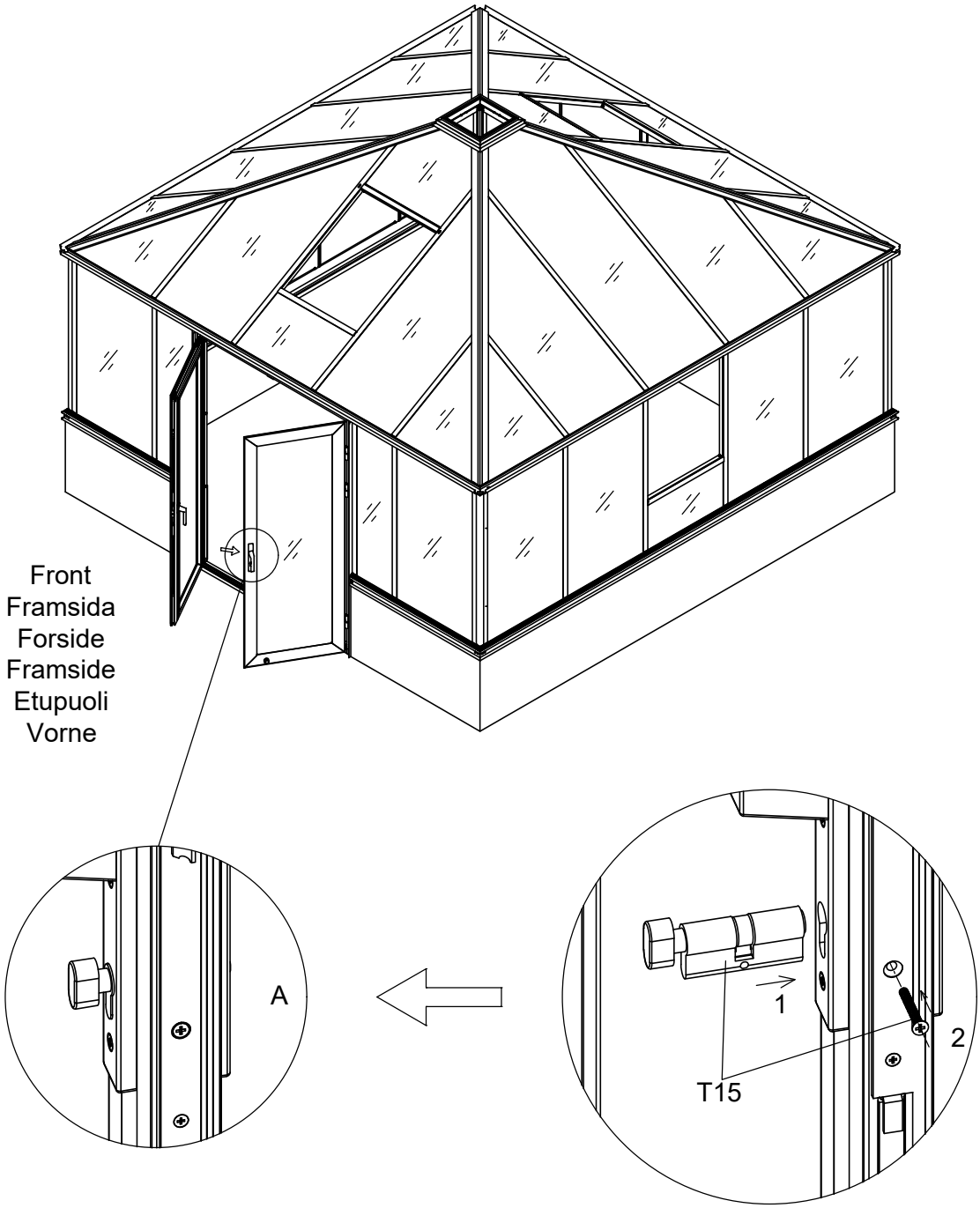

Part	NO.	QTY.	Length(MM)	CTN NO.
	T21	2	PCS	3040P-HD
	J07-A	6	PCS	3040P-HD
	Za4.2-38	6	PCS	3040P-HD

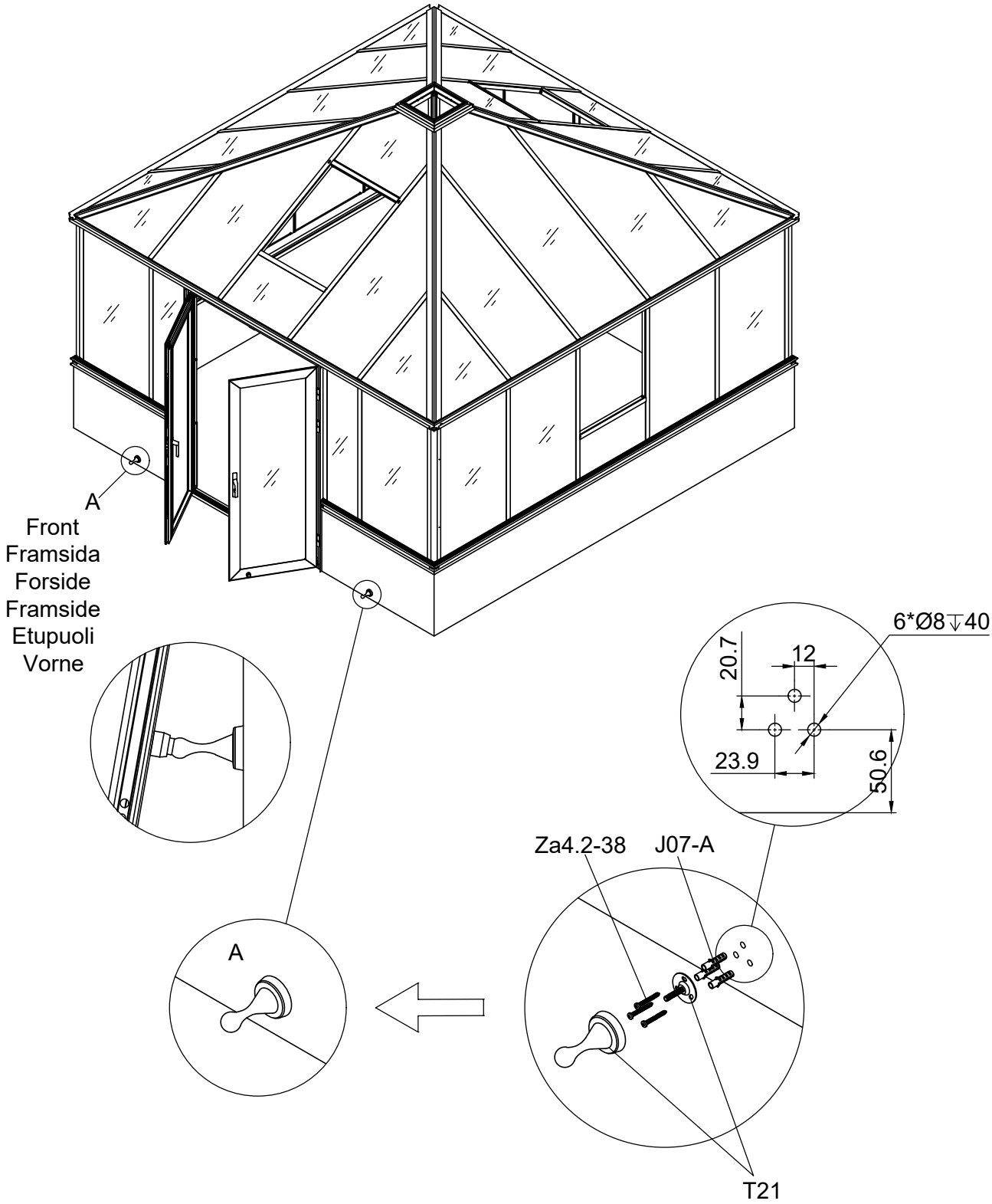

Part	NO.	QTY.	Length(MM)
	7B26-016	4	PCS
	M4-10	16	10

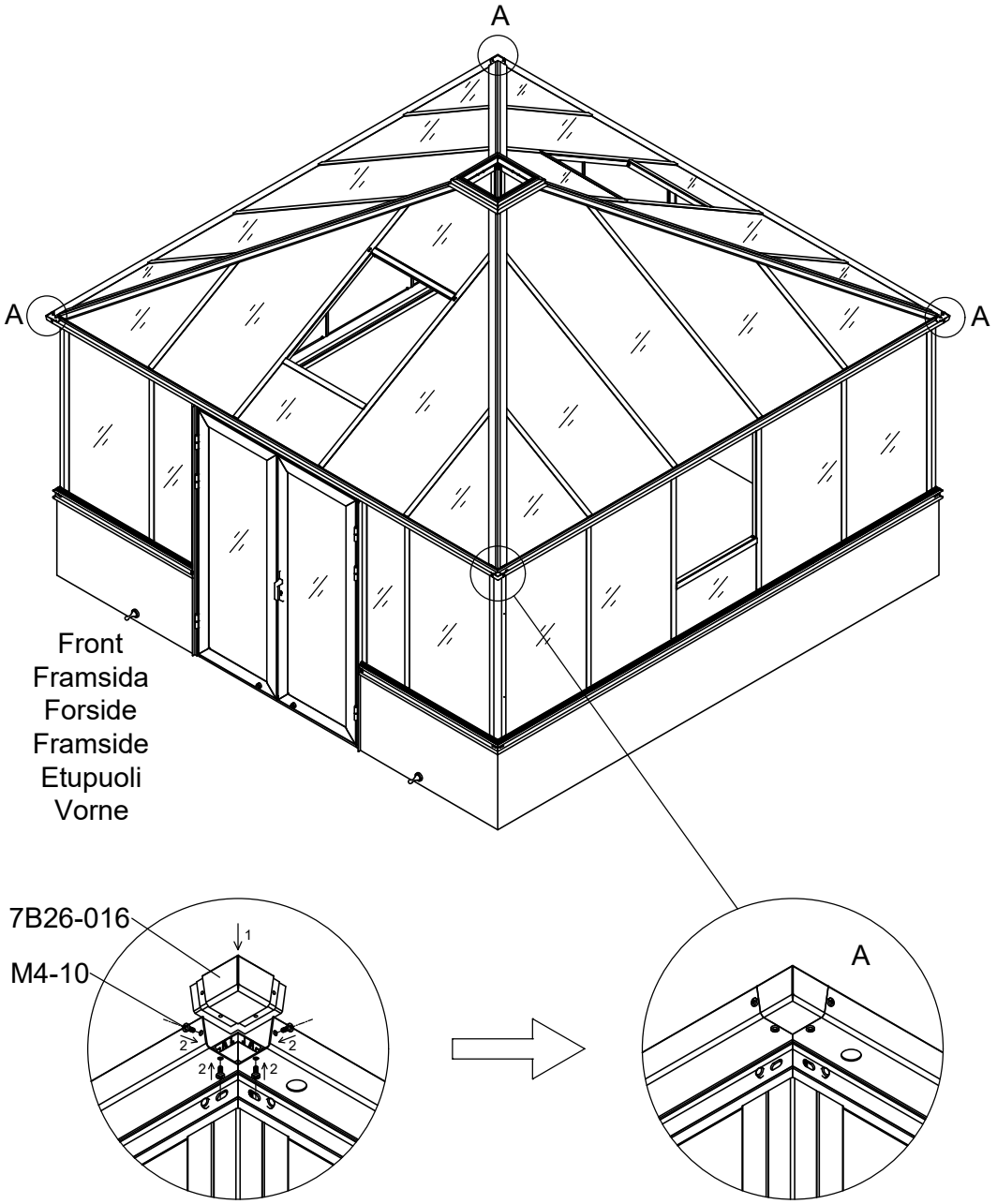

Part	NO.	QTY.	Length(MM)
	J08	1	PCS

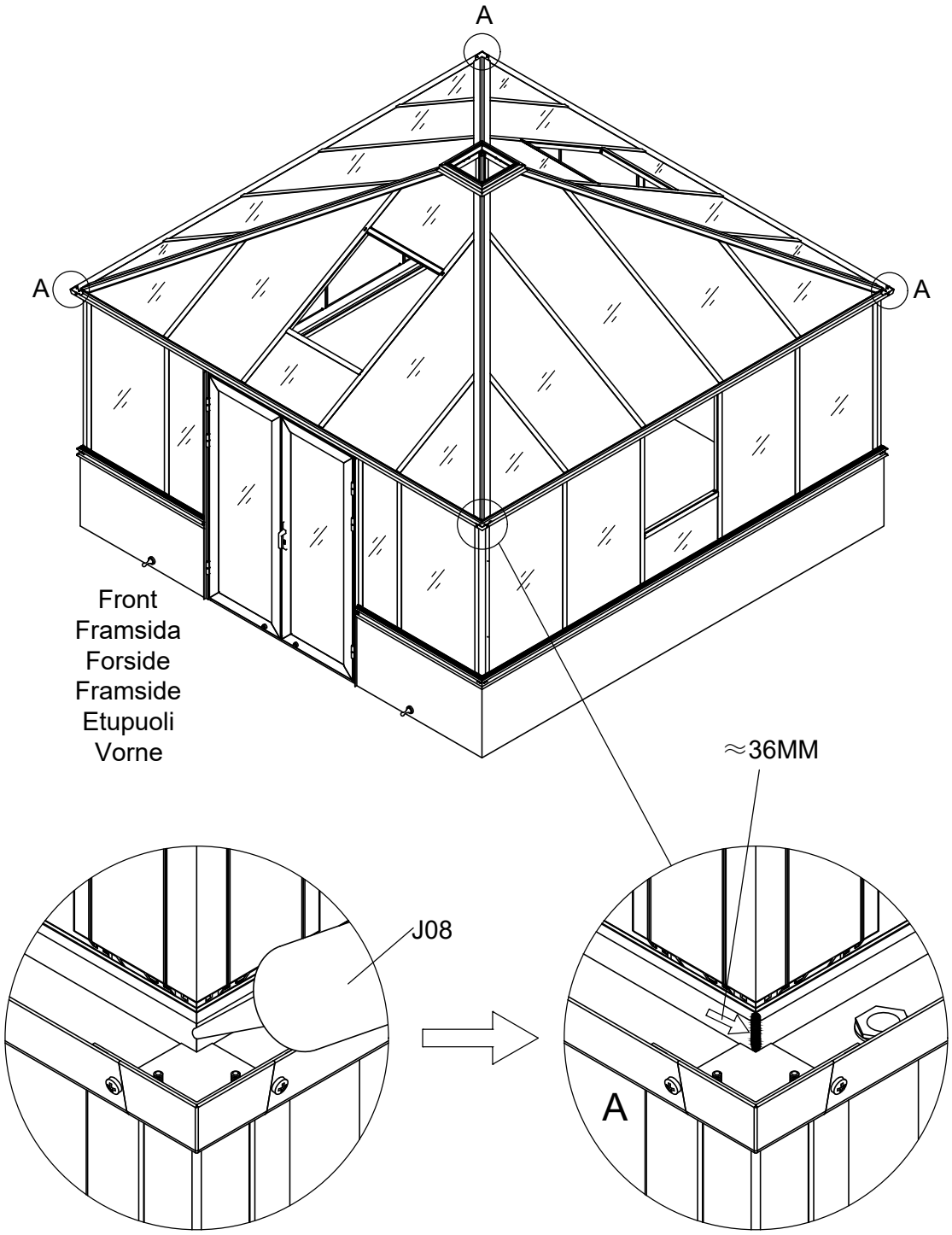

Part	NO.	QTY.	Length(MM)
	7B26-024	1	PCS
	7B26-023	4	PCS
	S6-10	8	PCS
	Mi6	8	PCS

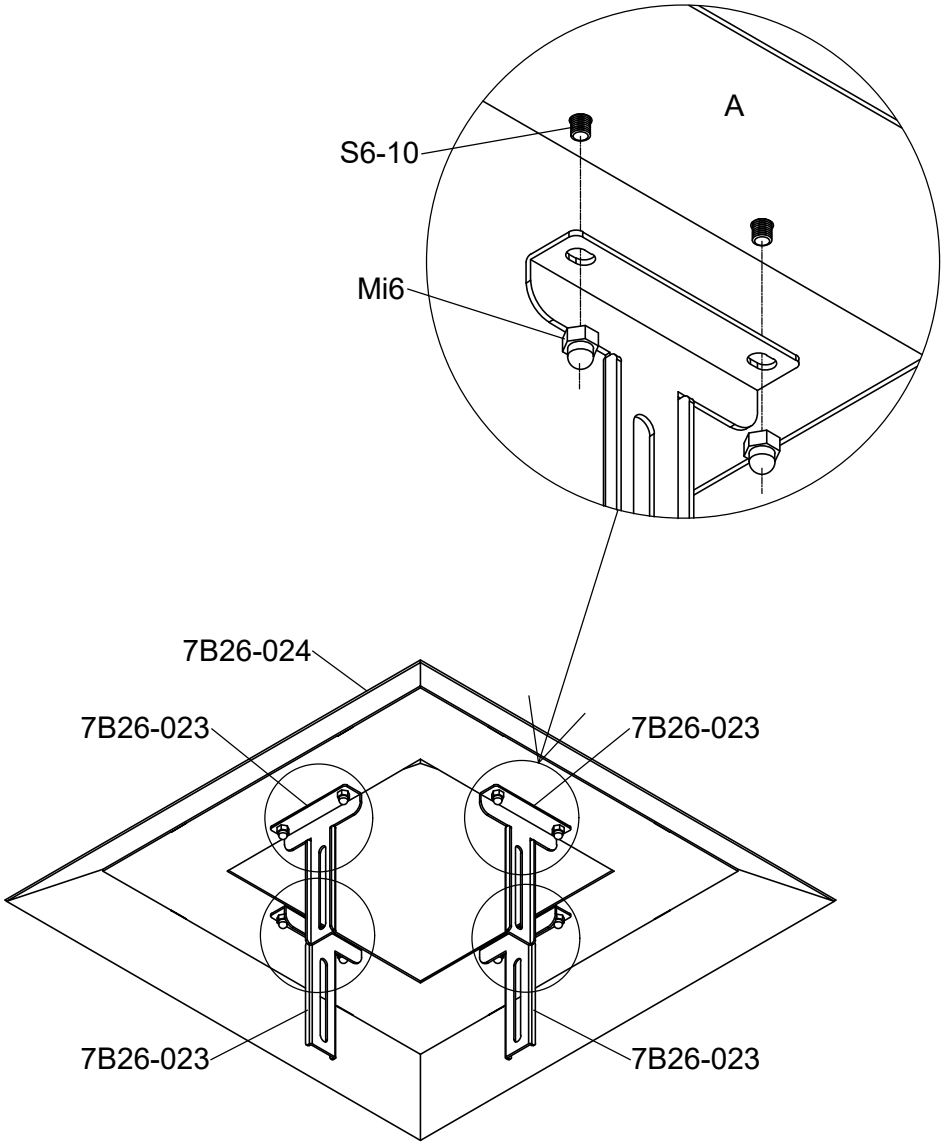

Part	NO.	QTY.	Length(MM)
	7B26-022	4	PCS
	Mi6	8	PCS
	Mi8	4	PCS
	S8-12	4	PCS
	Mi8A	4	PCS

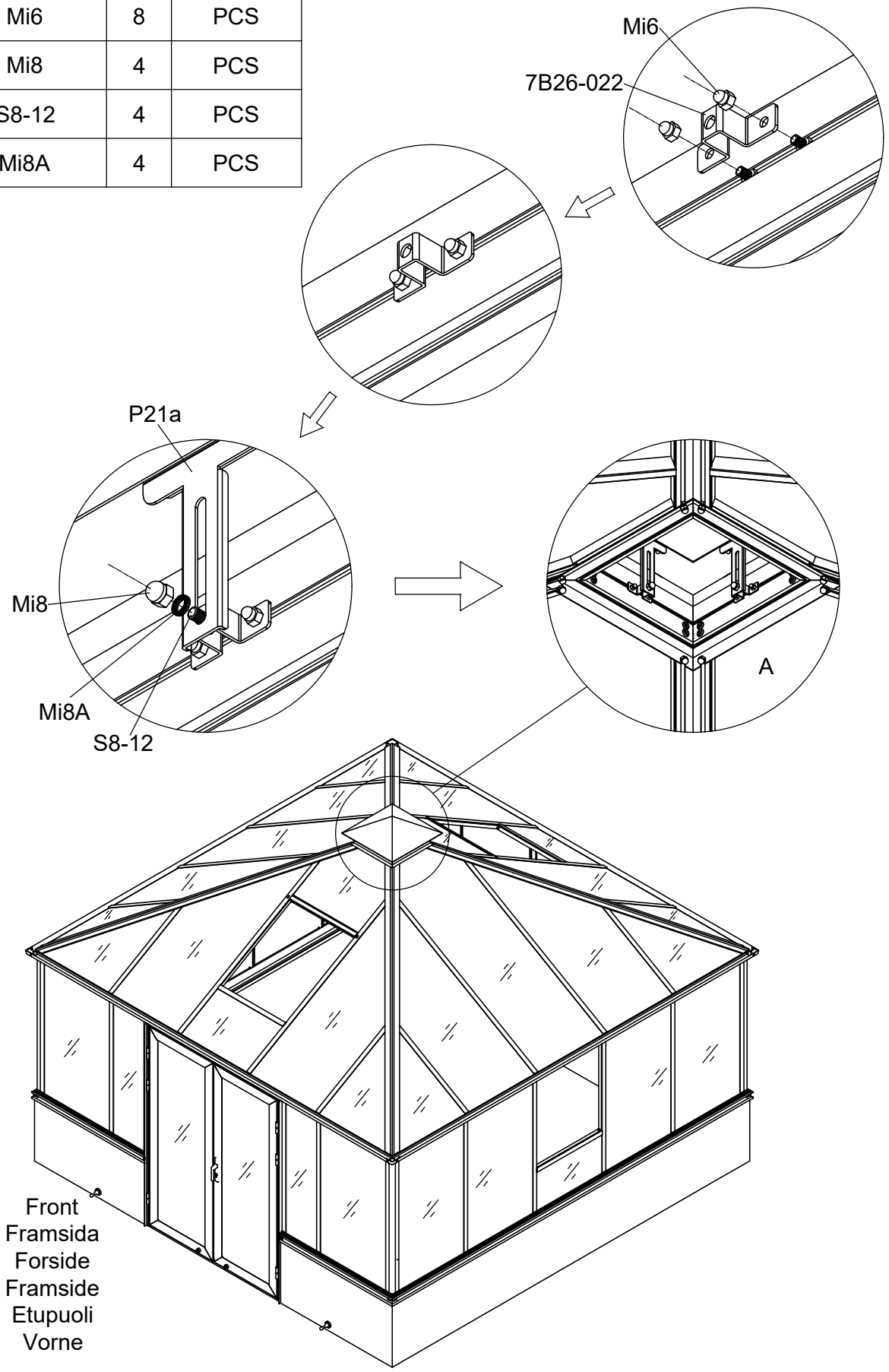

Part	NO.	QTY.	Length(MM)
	30X-Y80E-A	2	801
	40X-Y81E	4	882
	40X-Y82E	2	801
	W06	8	46
	W04	8	PCS
	782×863	2	863
	MCJT002	4	12

Roof Window

2 PCS

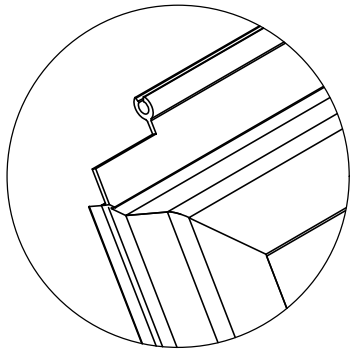

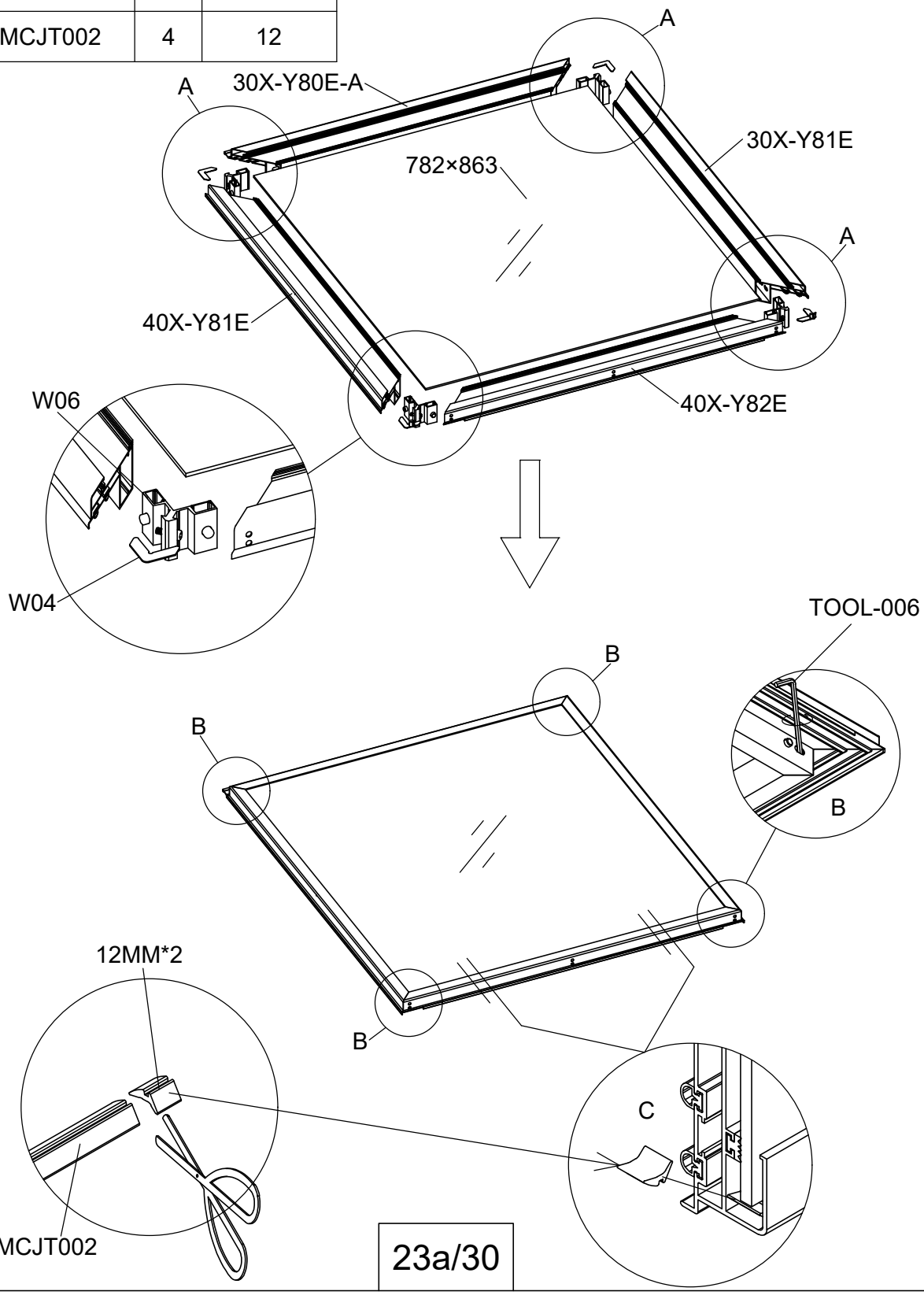

Part	NO.	QTY.	Length(MM)
	MCJT002	7M	
	J09	16	PCS

Roof Window

2 PCS

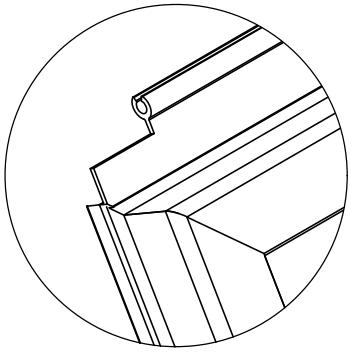

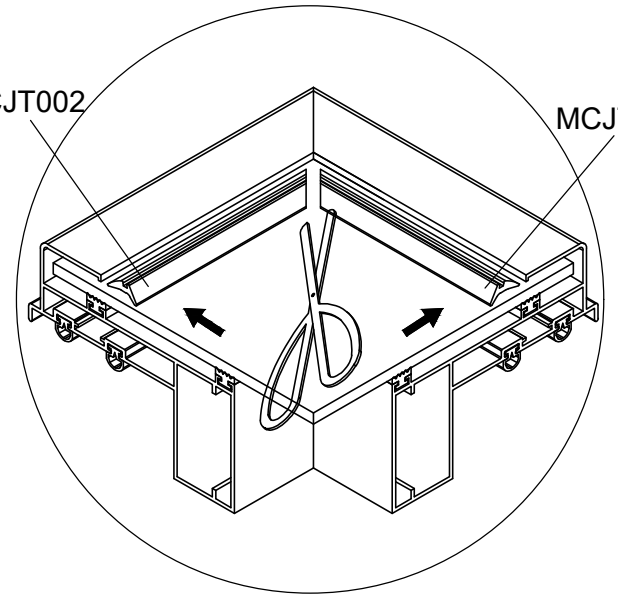

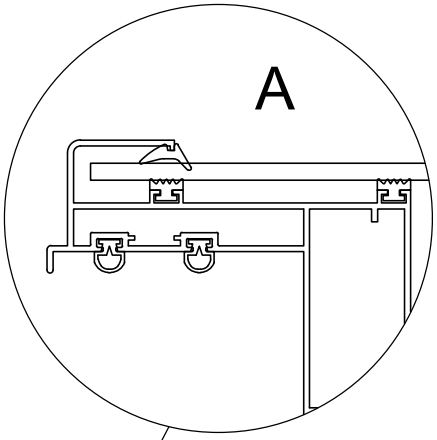

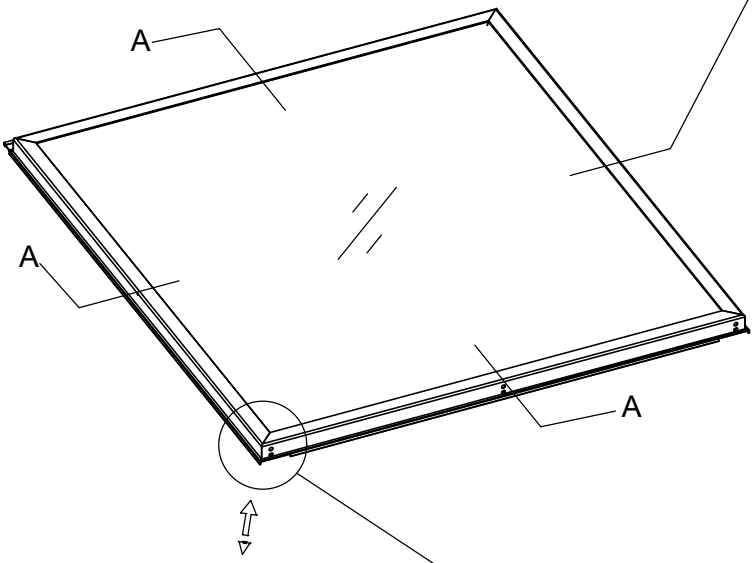

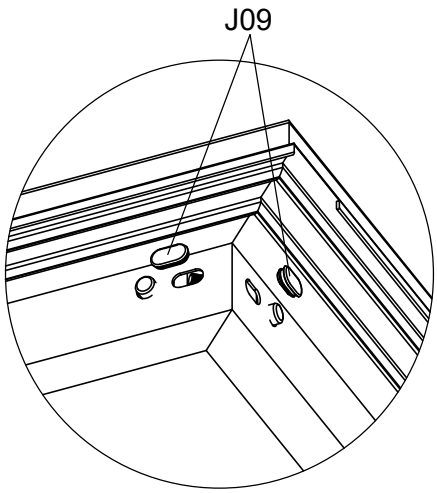

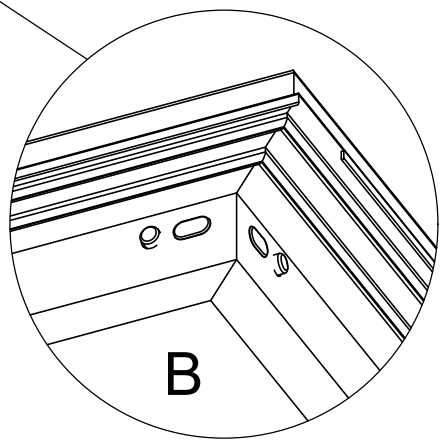

Part	NO.	QTY.	Length(MM)
	30X-Y80E-B	2	801
	40X-Y81E	4	882
	30X-Y82E	2	801
	W06	8	46
	W04	8	PCS
	782×863	2	863
	MCJT002	4	12

Side Window

2 PCS

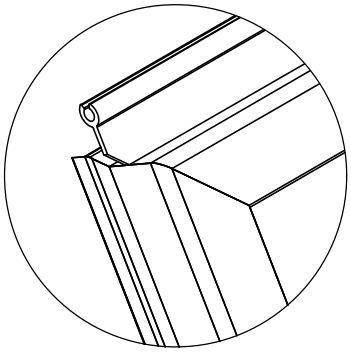

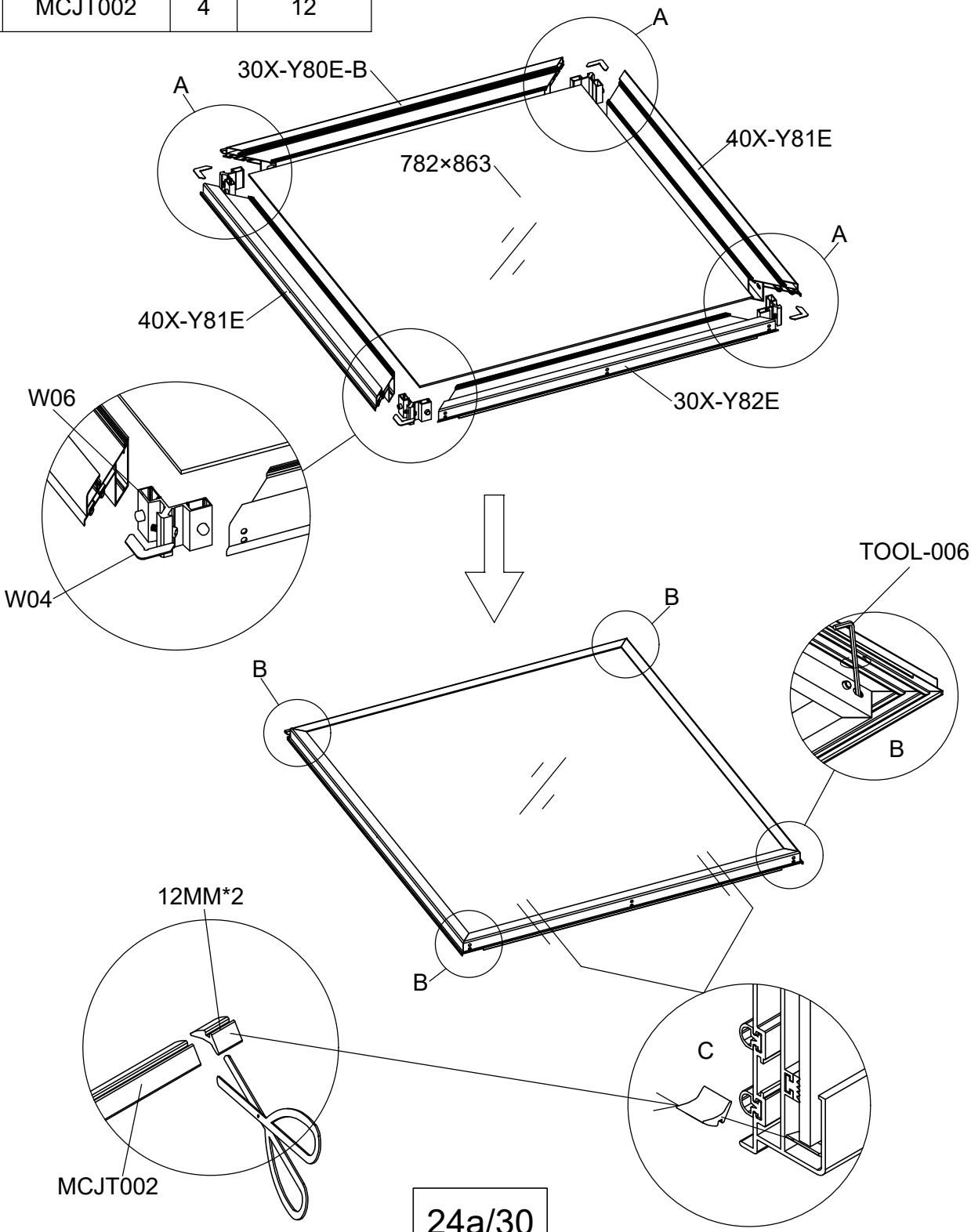

Part	NO.	QTY.	Length(MM)
	MCJT002	7M	
	J09	16	PCS

Side Window

2 PCS

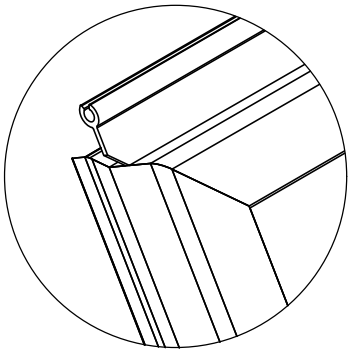

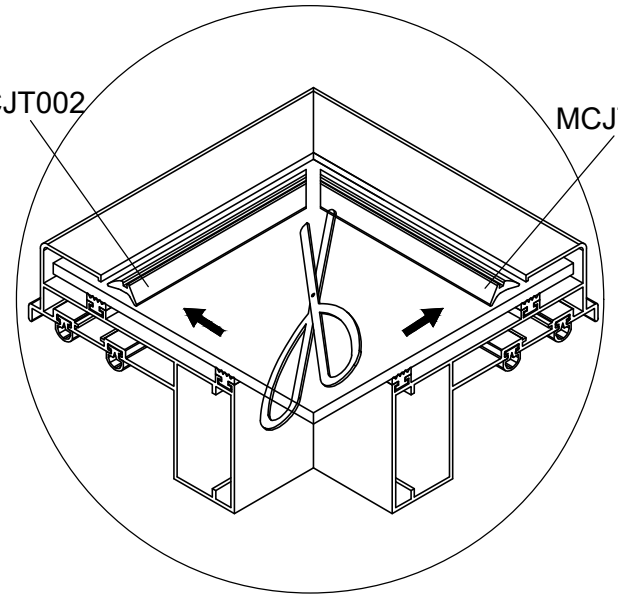

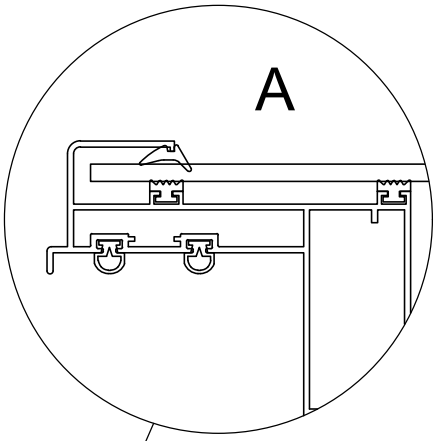

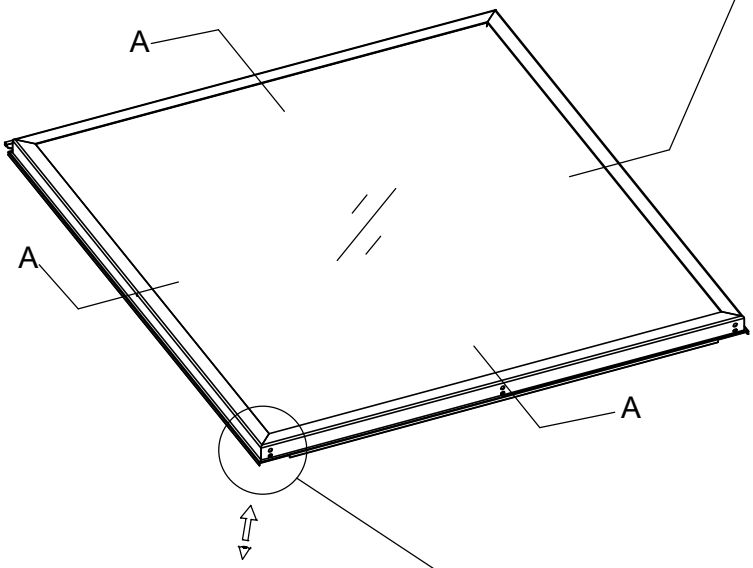

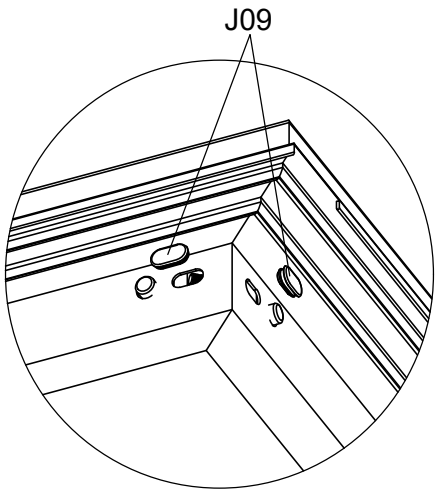

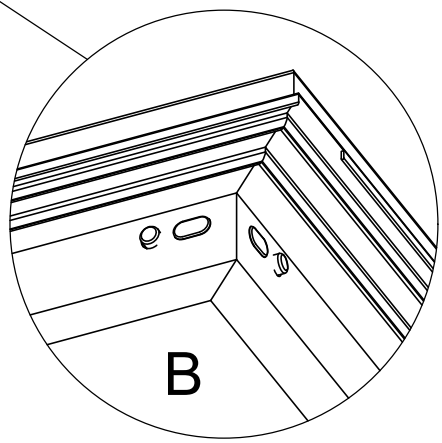

Part	NO.	QTY.	Length(MM)
	30X-Y62-A	2	860
	Z4.2-13	6	PCS
	7C28-004	6	PCS

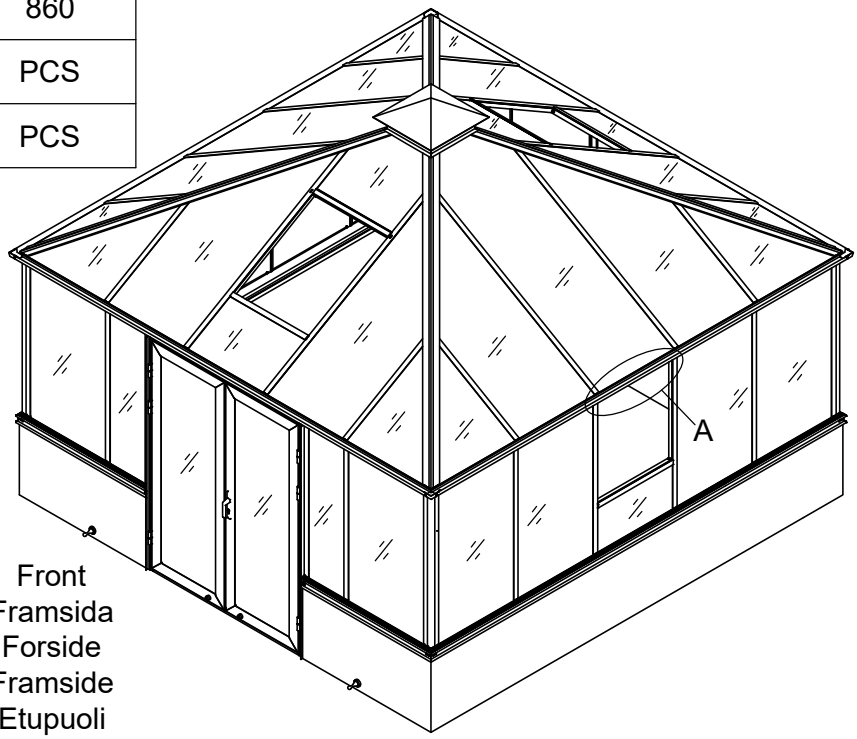

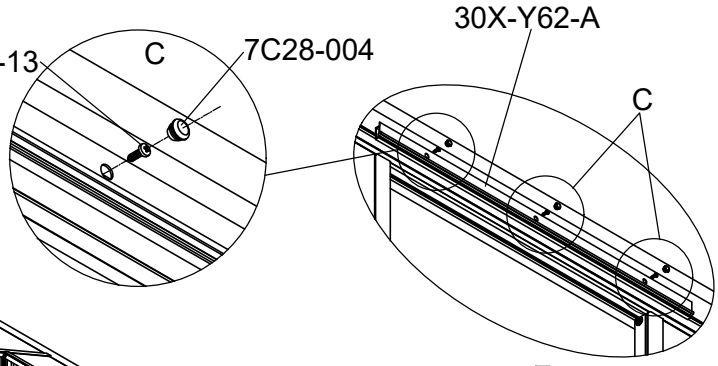

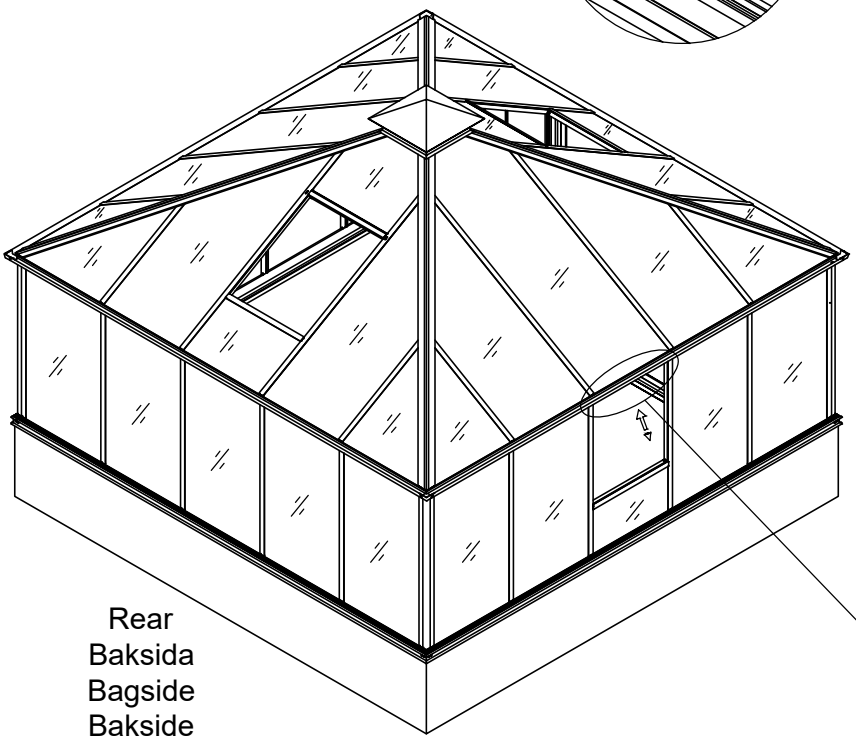

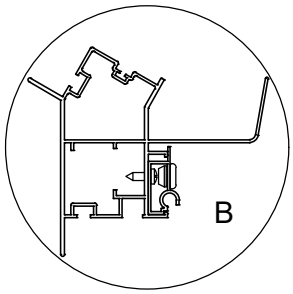

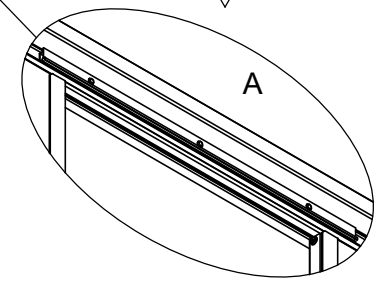

Part	NO.	QTY.	Length(MM)
	J08	1	PCS

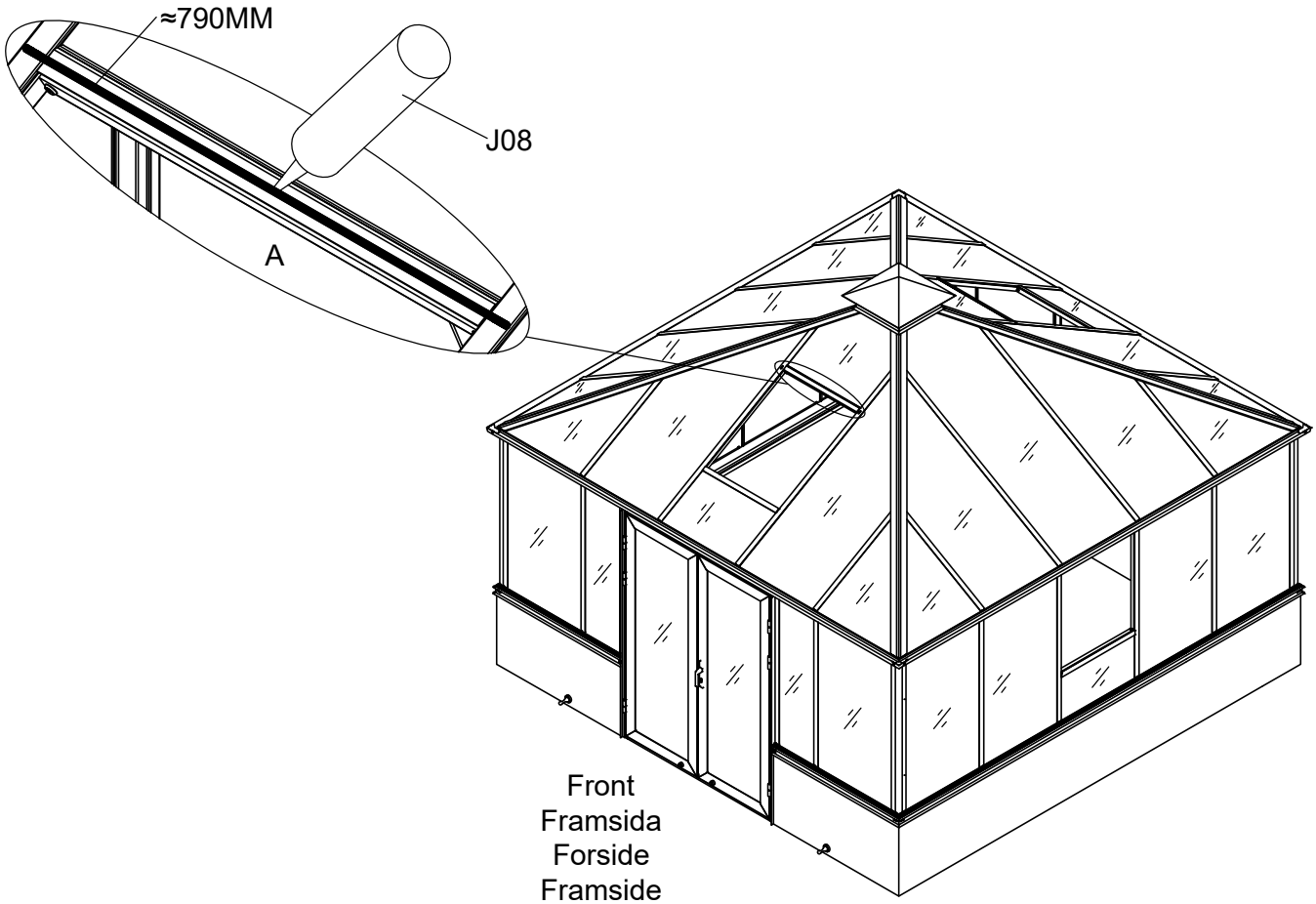

Front
Framsida
Forside
Framside
Etupuoli
Vorne

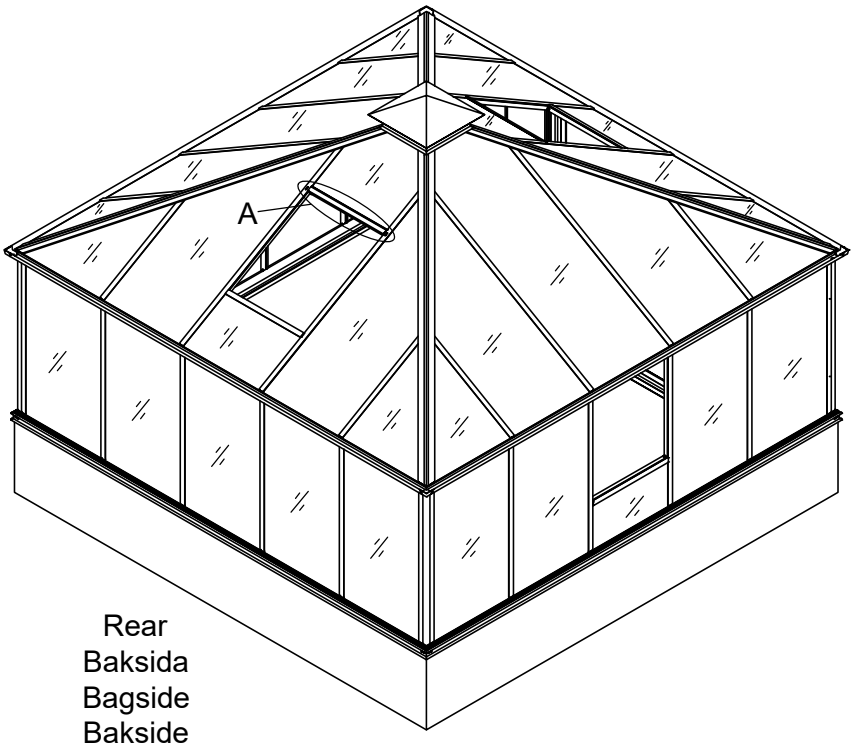

Rear
Baksida
Bagside
Bakside
Takapuoli
Hinten

Part	NO.	QTY.	Length(MM)
	30X-Y34-A	2	790
	Z4.2-13	8	PCS
	Z4.2-38	8	PCS
	7C28-004	16	PCS

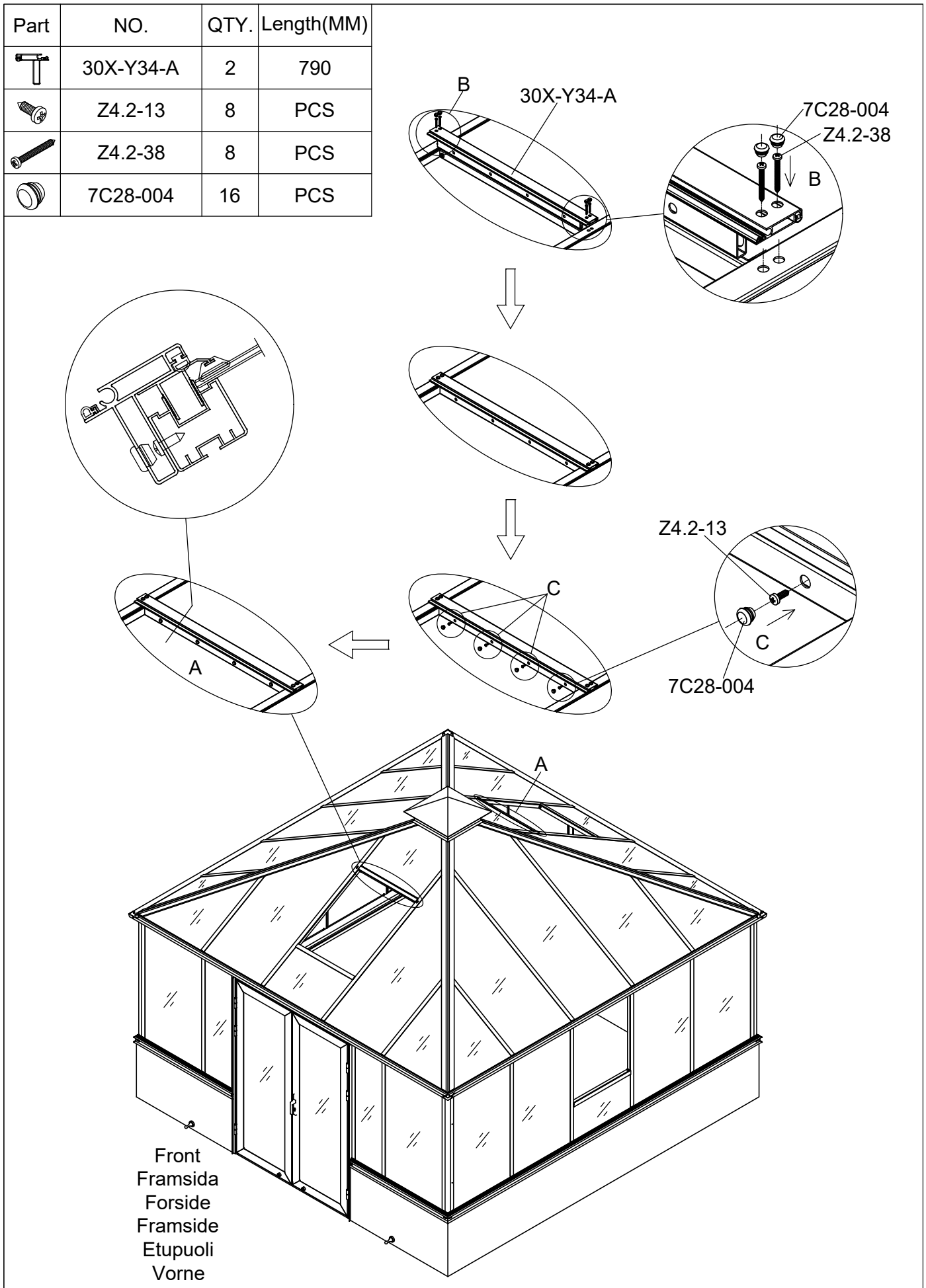

Part	NO.	QTY.	Length(MM)
	J11	4	PCS
	J08	1	PCS

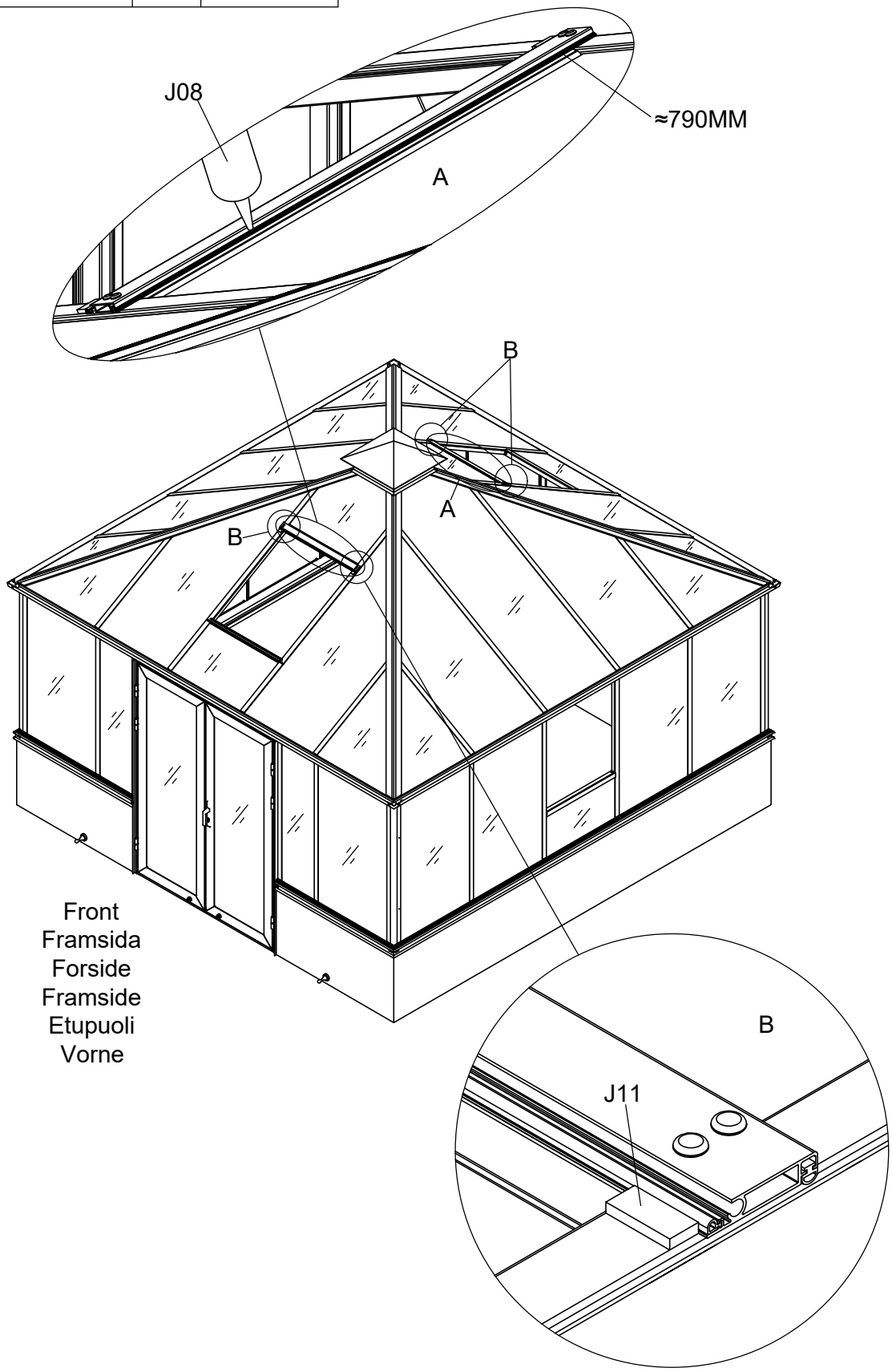

Part	NO.	QTY.	Length(MM)
	T07	4	PCS

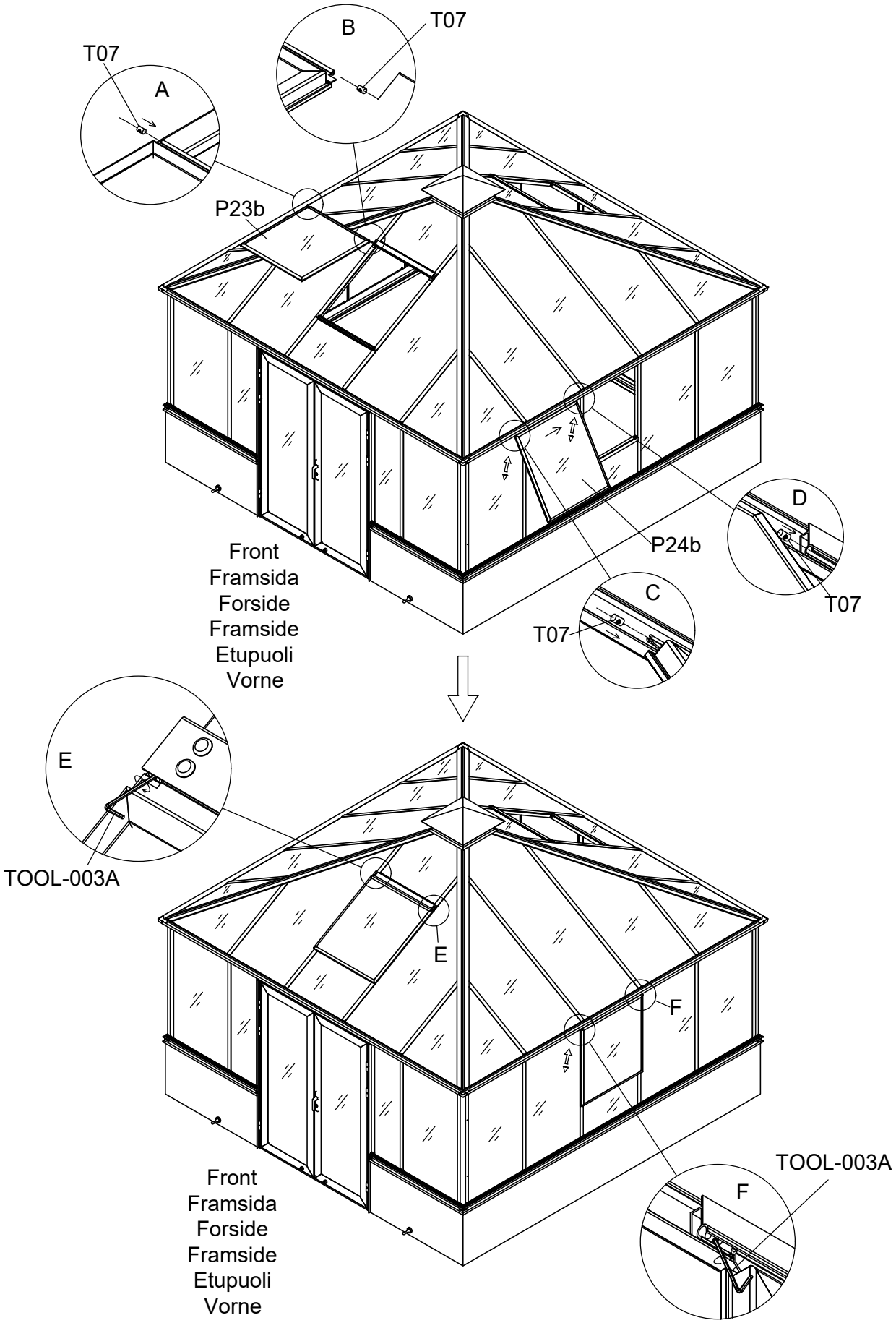

Part	NO.	QTY.	Length(MM)
	T07	4	PCS

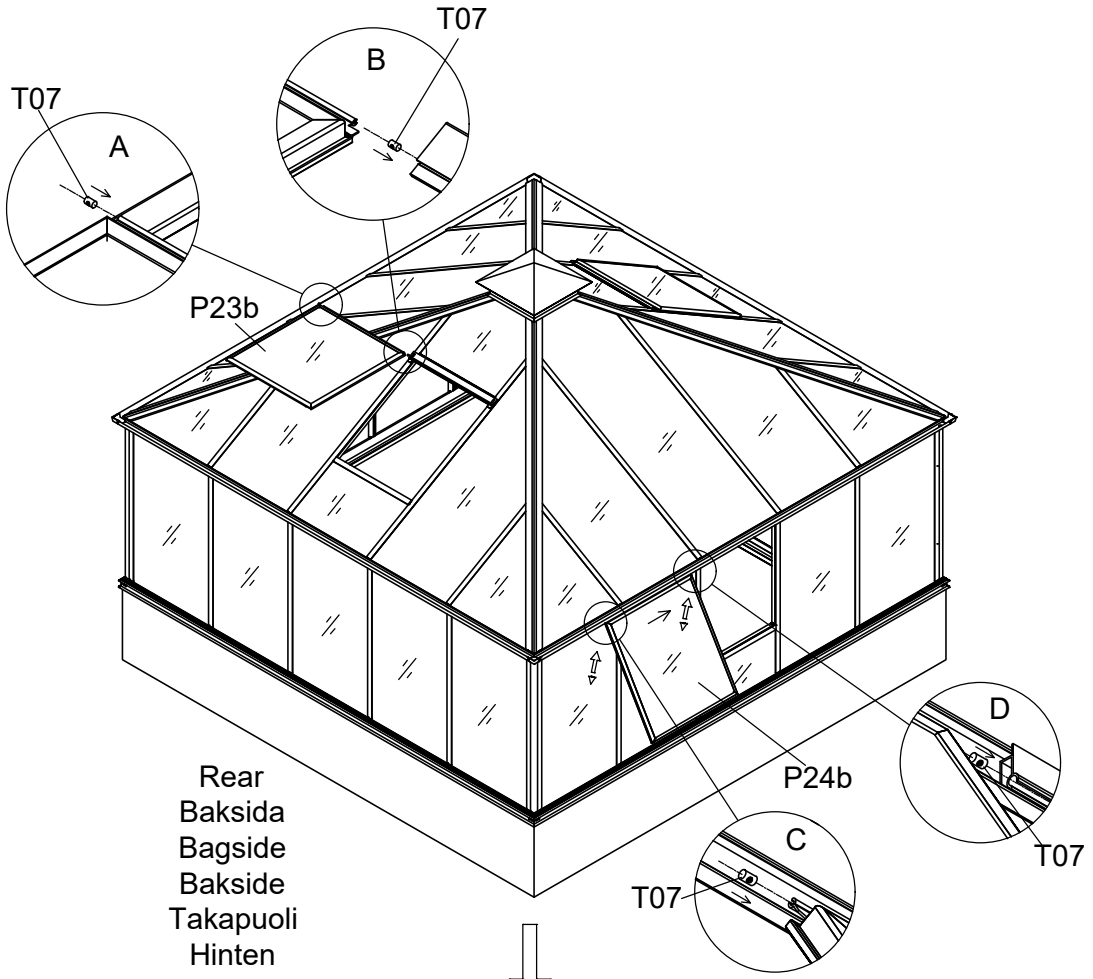

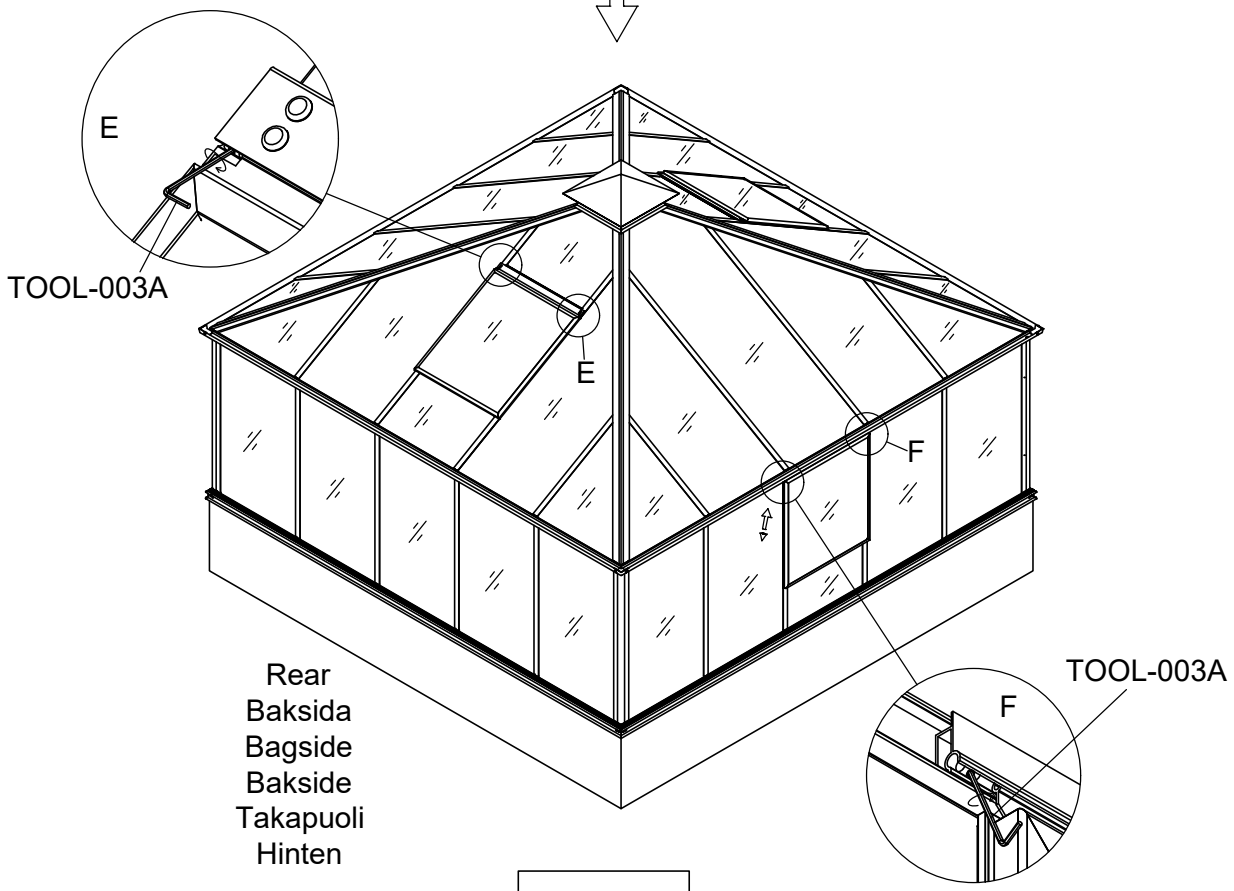

Part	NO.	QTY.	Length(MM)
	T03R	2	PCS
	T03L	2	PCS
	Z4.2-13	24	PCS

2 PCS

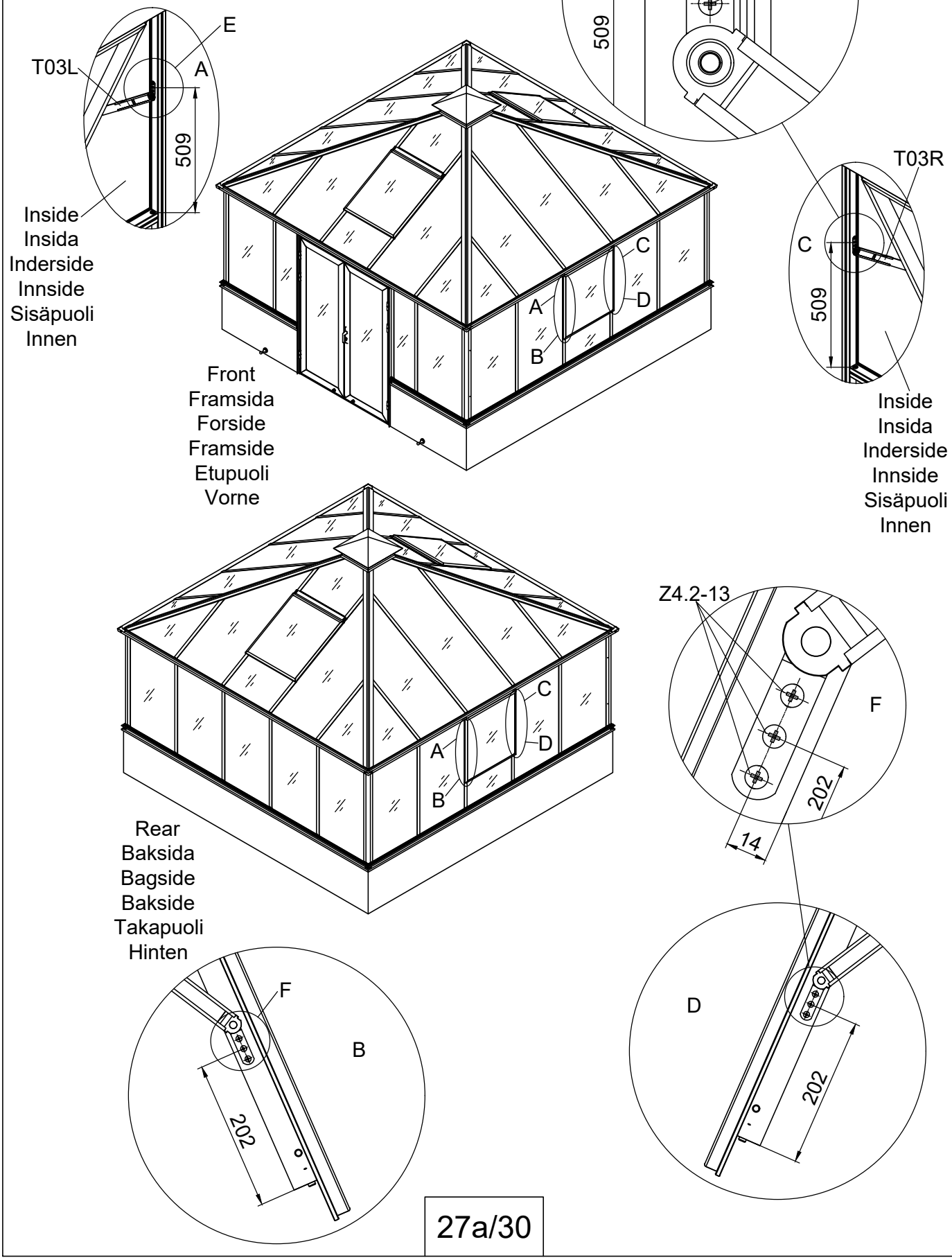

Part	NO.	QTY.	Length(MM)
	T02A	2	PCS
	M5-35	4	PCS

2 PCS

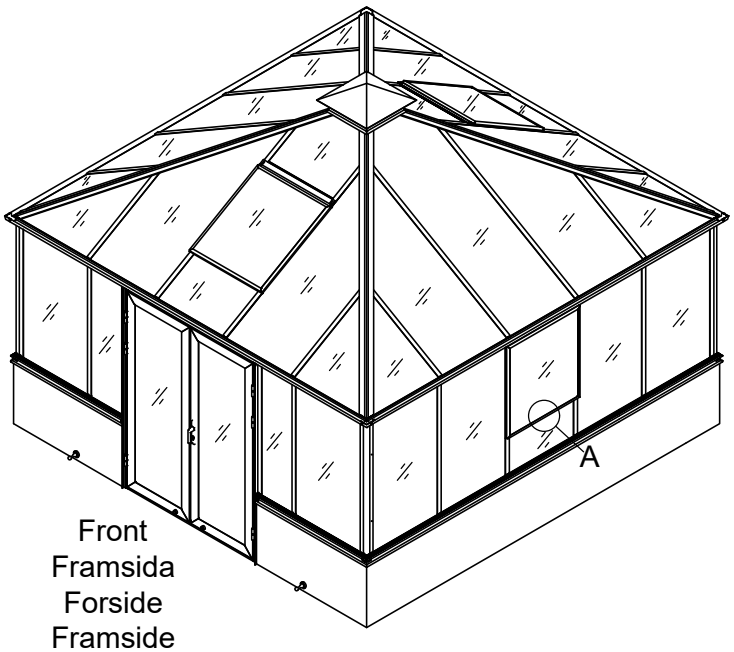

Front
Framsida
Forside
Framside
Etupuoli
Vorne

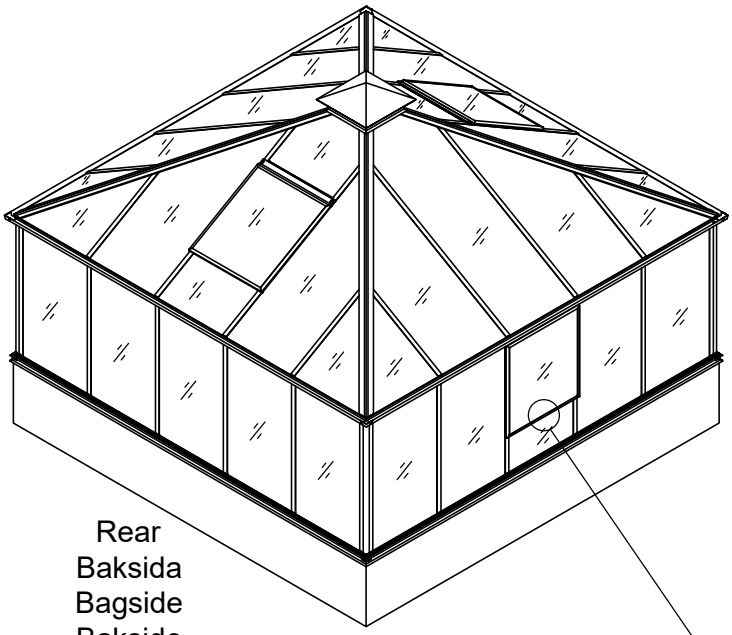

Rear
Baksida
Bagside
Bakside
Takapuoli
Hinten

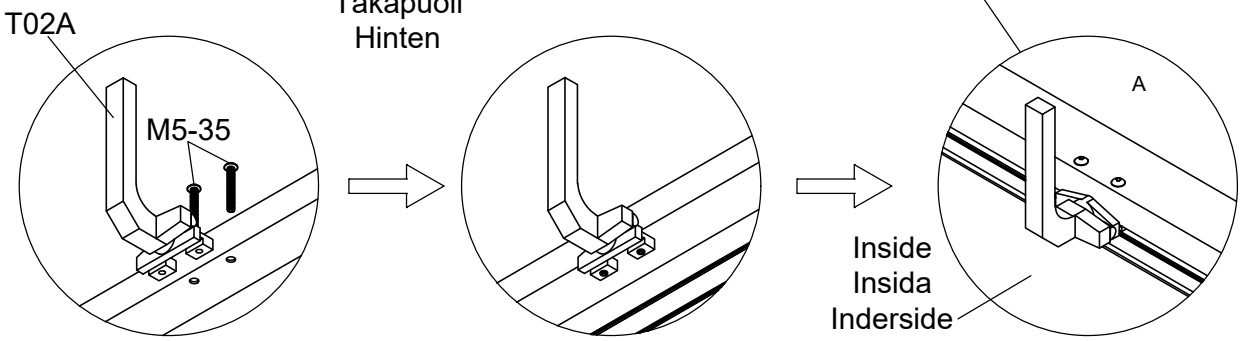

Inside
Insida
Inderside
Innside
Sisäpuoli
Innen

Part	NO.	QTY.	Length(MM)	CTN NO.
	30X-Y60-5AN	1	3887	3033P-S-5F
	30X-Y60-5AN	1	3887	3000P- 30X-Y60-5AN
	30X-Y62-BN	4	1512	3033P-S-BASE5

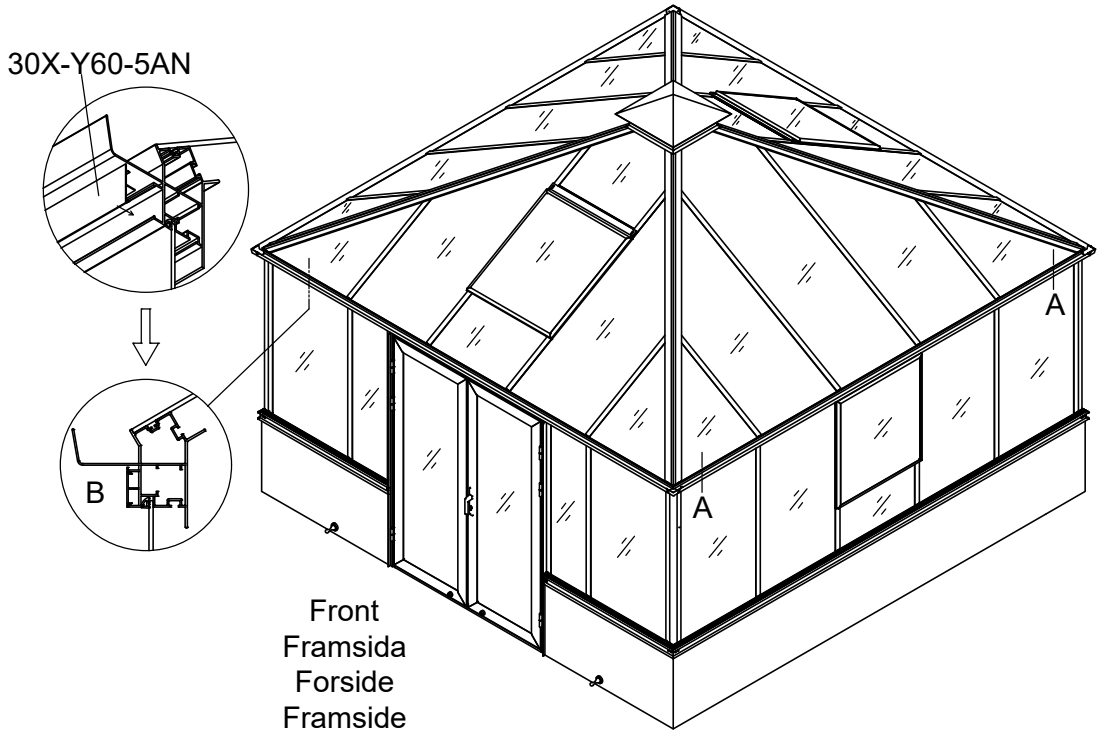

Front
Framsida
Forside
Framside
Etupuoli
Vorne

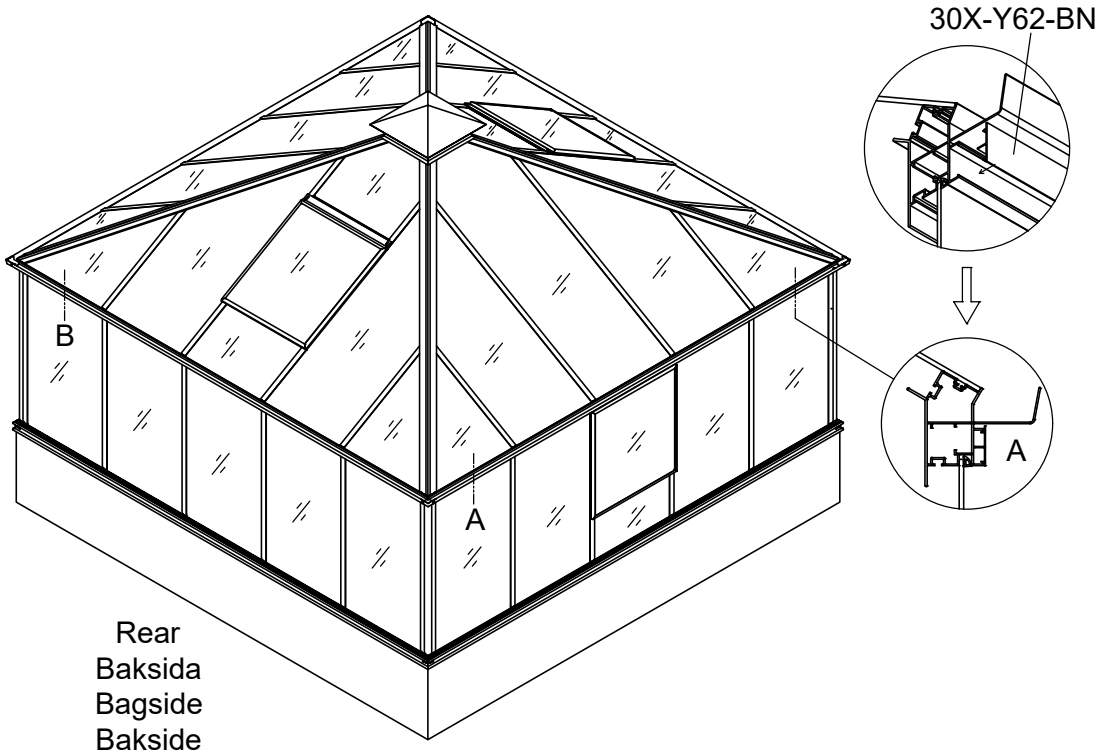

Rear
Baksida
Bagside
Bakside
Takapuoli
Hinten

Part	NO.	QTY.	Length(MM)
	7C33-S02	2	PCS

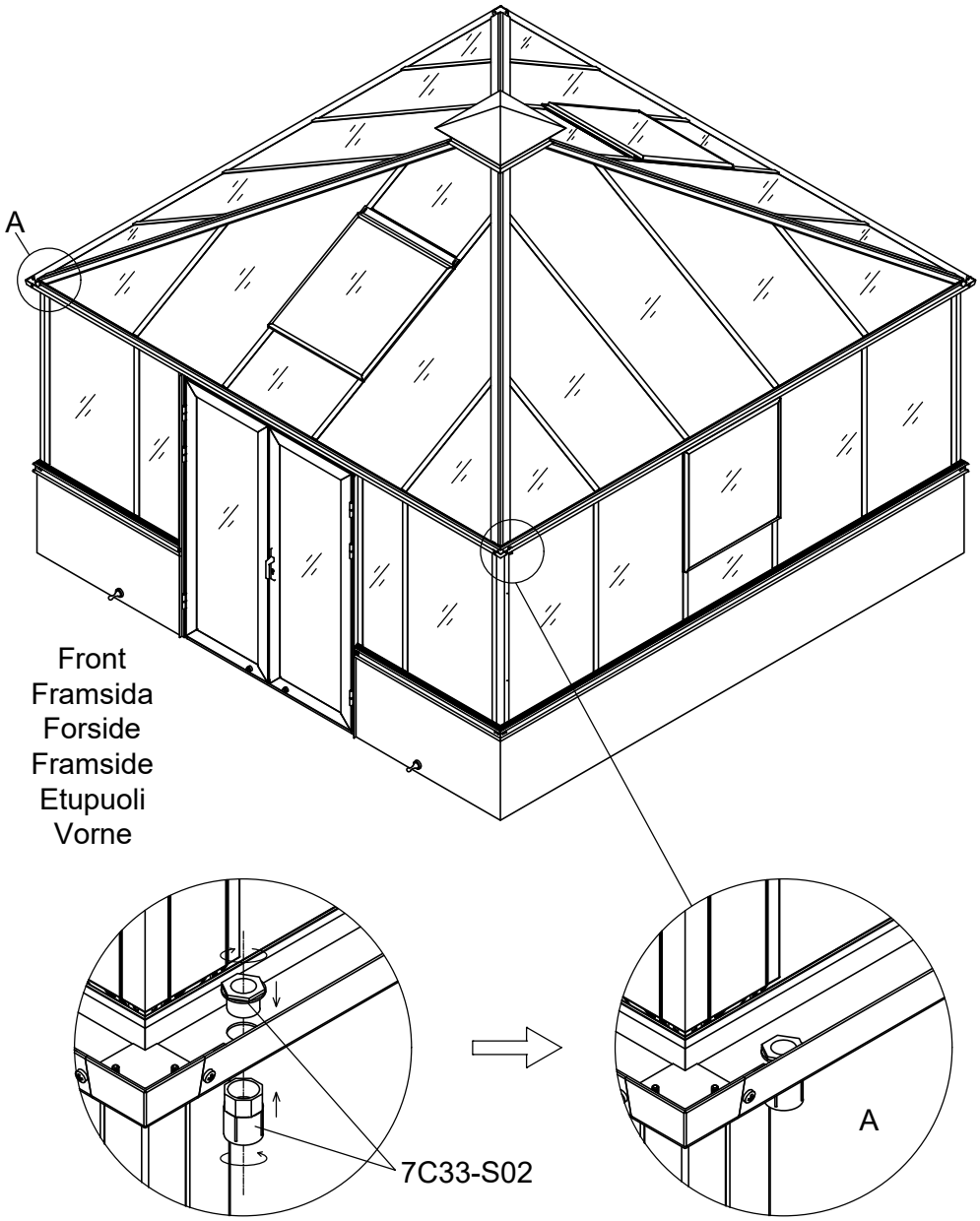

Part	NO.	QTY.	Length(MM)
	7C26-S01A	2	1900
	7C33-S03	4	PCS
	Z4.8-25	4	PCS
	7C33-S04	2	PCS
	J07-A	2	PCS
	J07-B	2	PCS

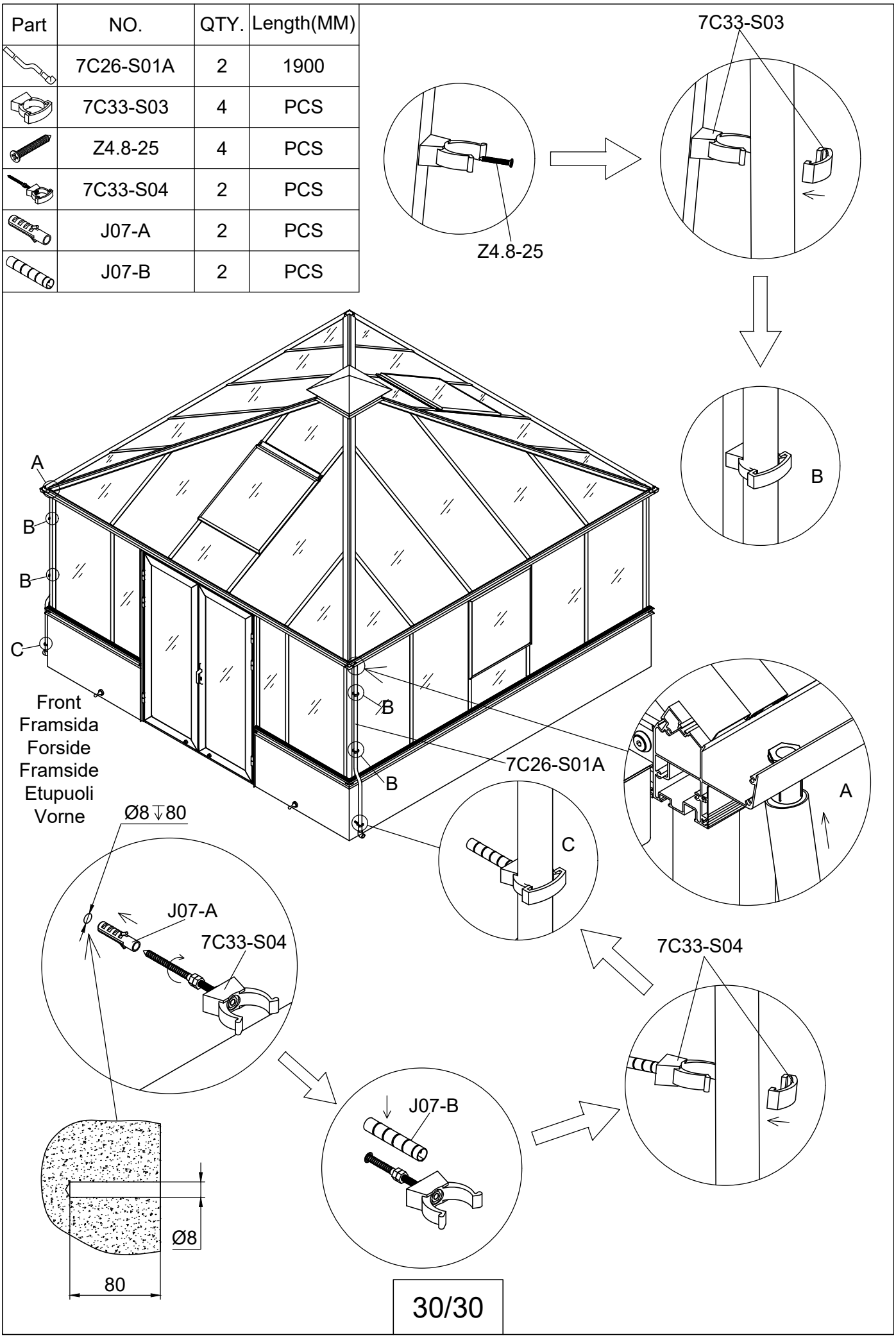

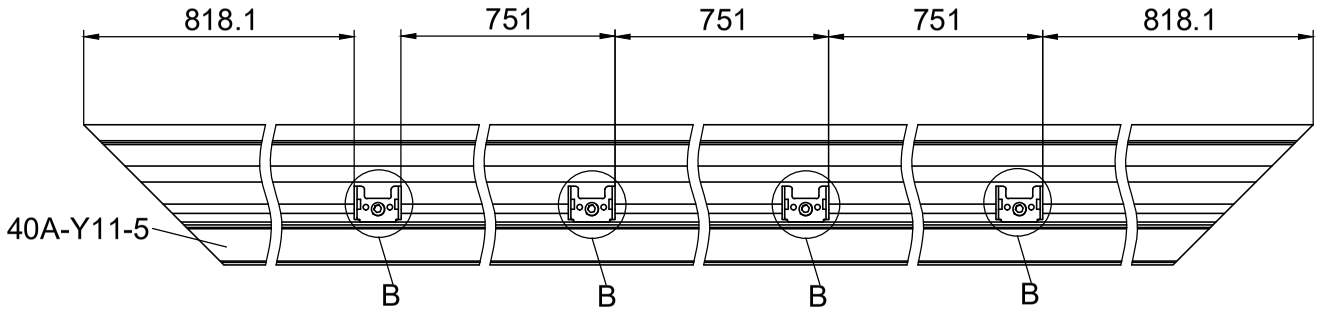

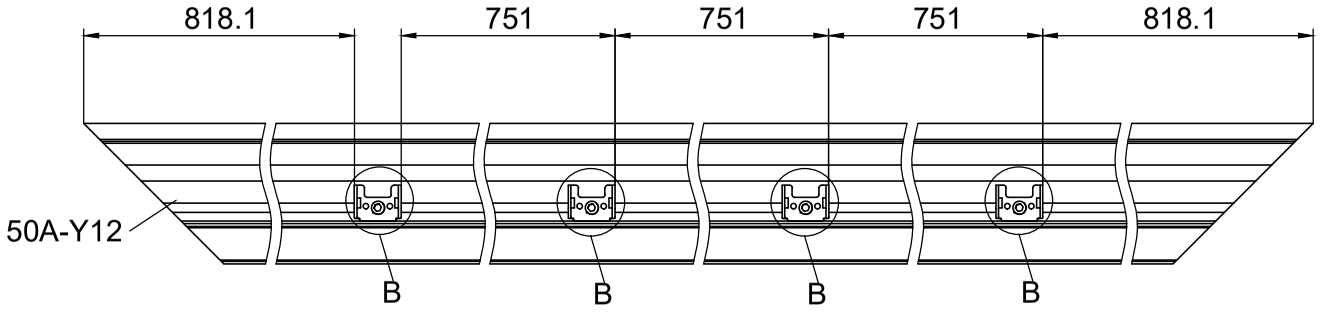

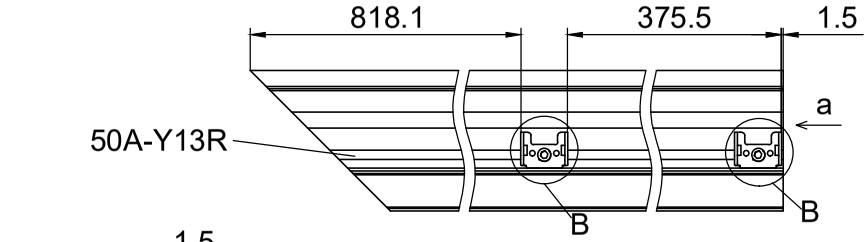

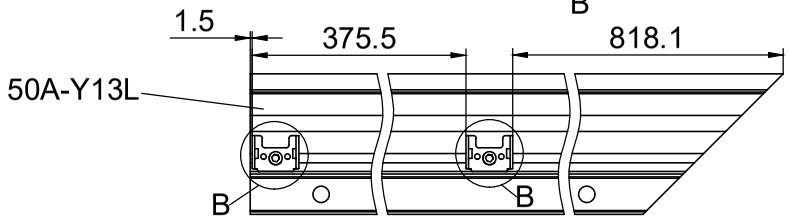

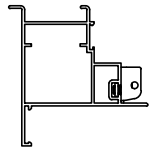

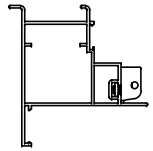

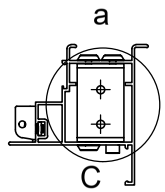

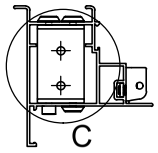

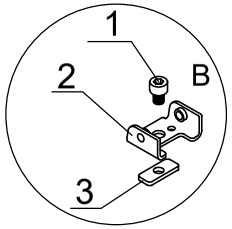

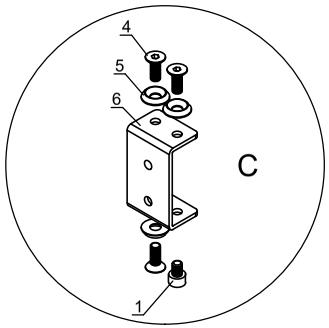

F1

NO.	
1	M6-8
2	7B26-011
3	7B26-025
4	Si6-16
5	J05
6	7B26-037A

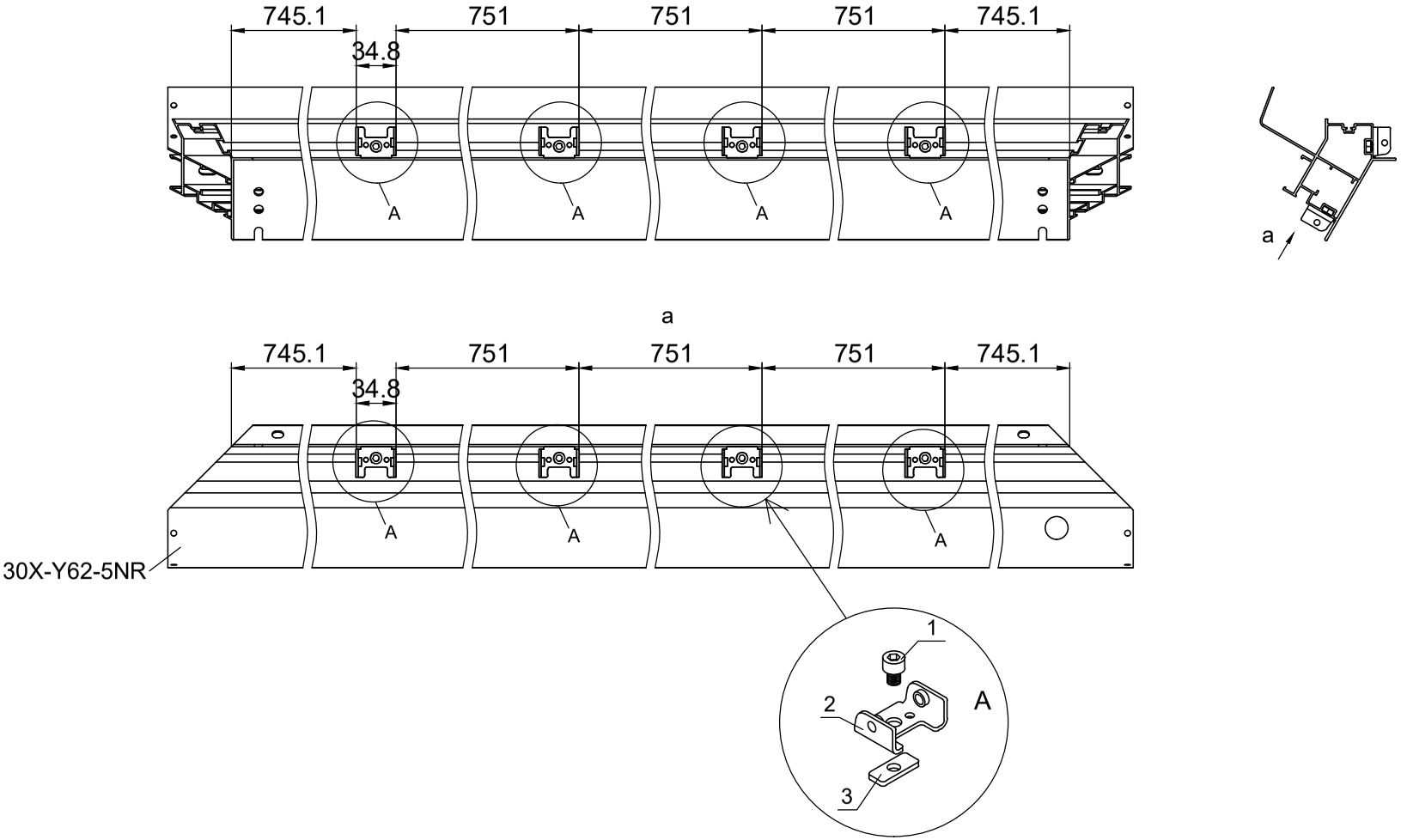

NO.	
1	M6-8
2	7B26-011
3	7B26-025

F2

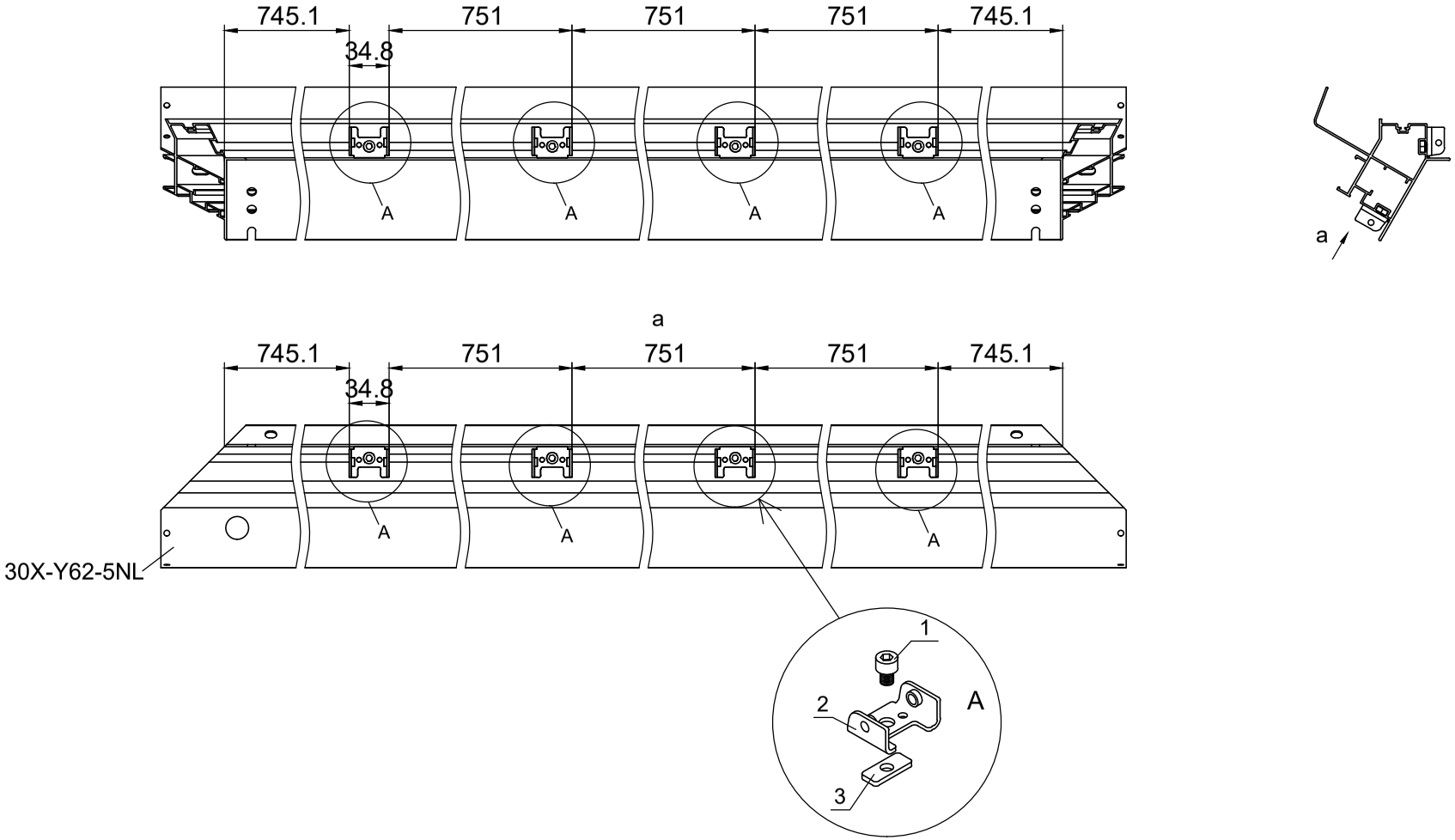

NO.	
1	M6-8
2	7B26-011
3	7B26-025

F3

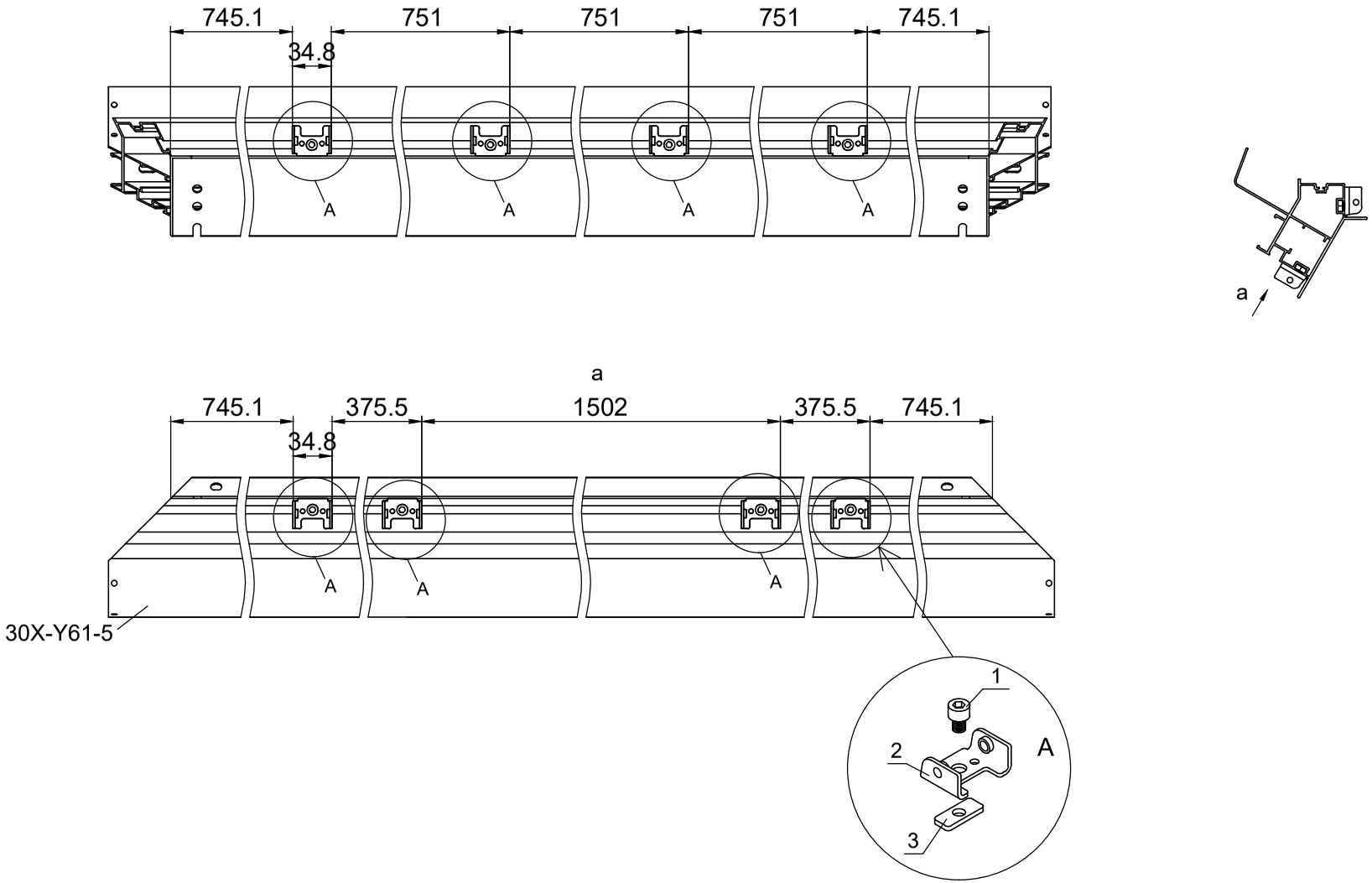

NO.	
1	M6-8
2	7B26-011
3	7B26-025

F4

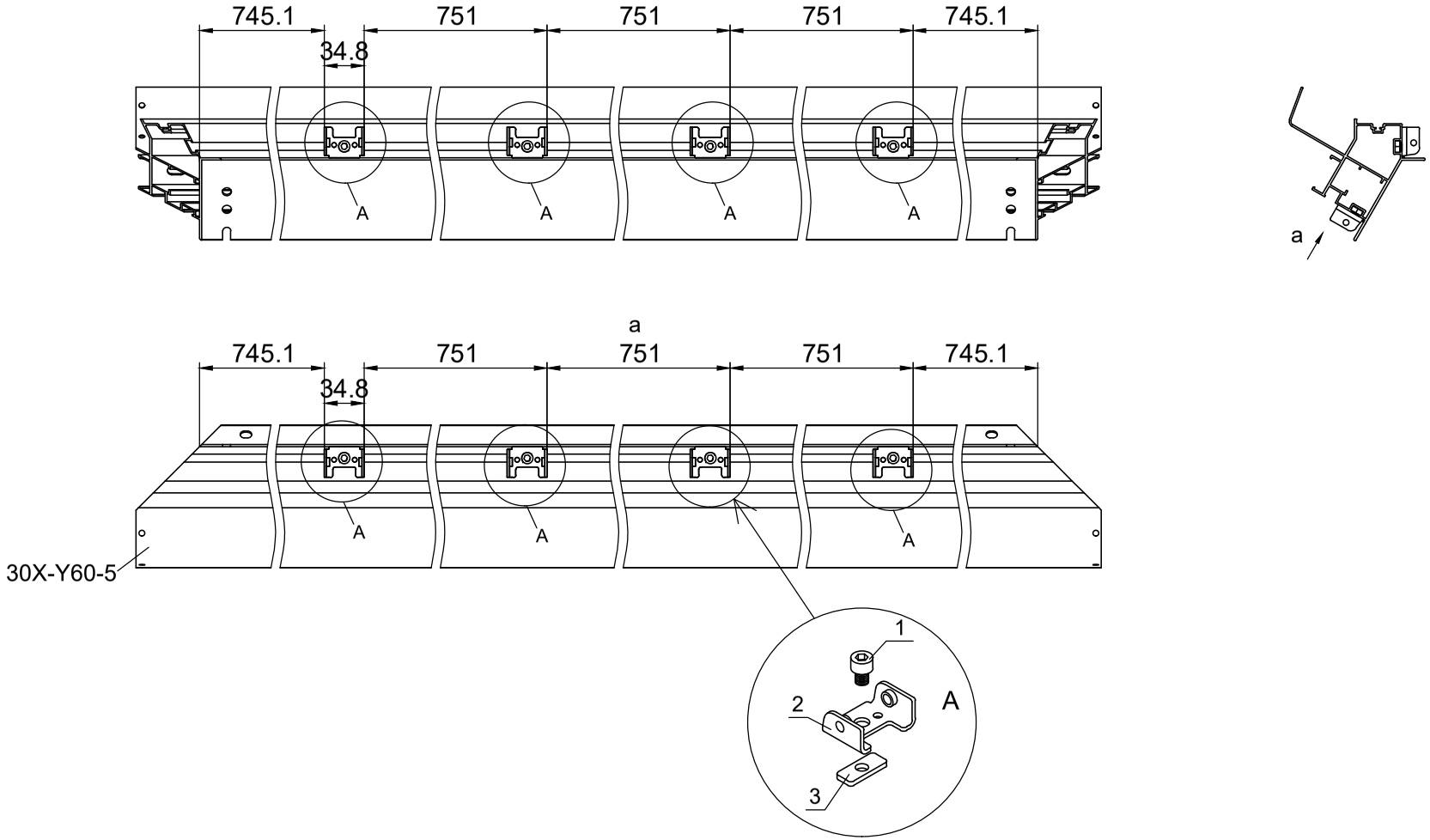

NO.	
1	M6-8
2	7B26-011
3	7B26-025

F5

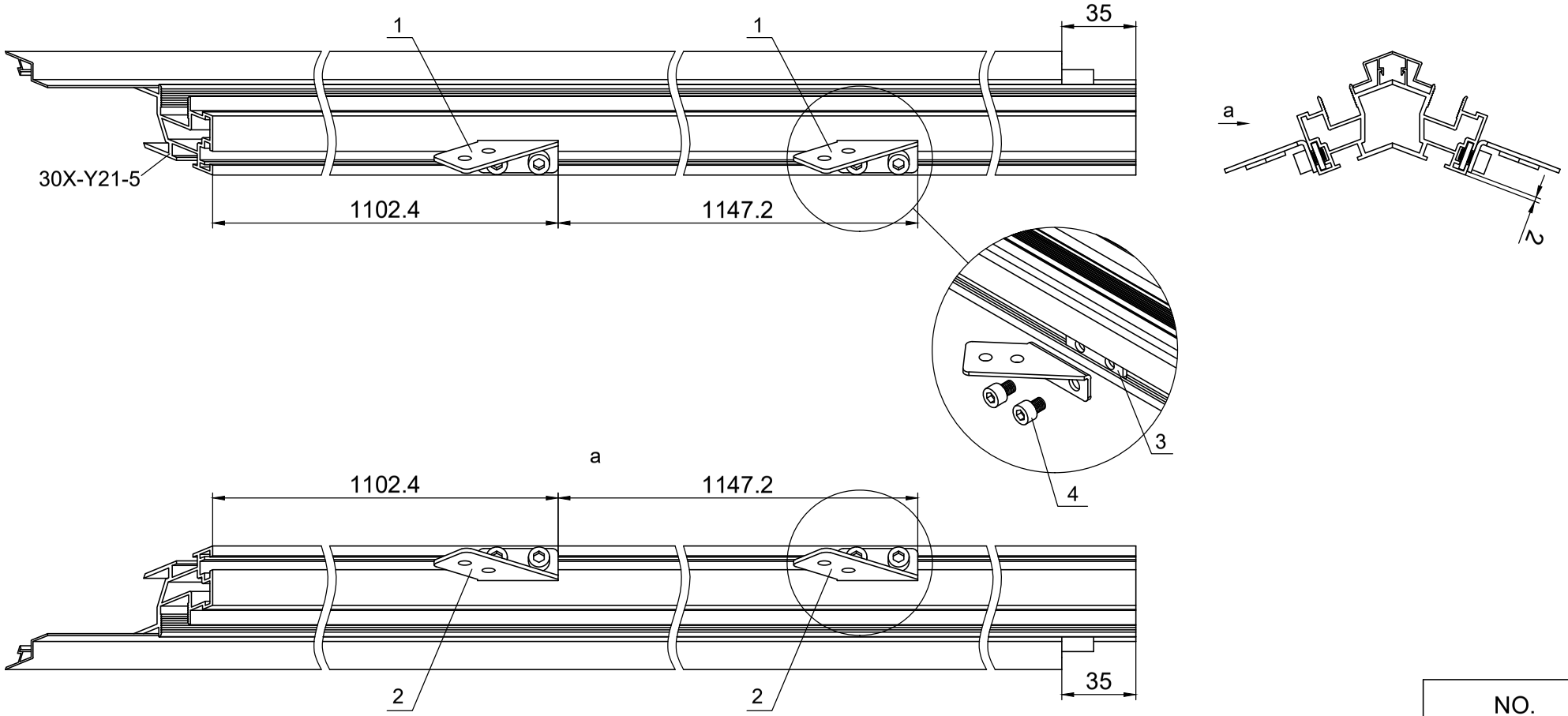

NO.	
1	7B26-020
2	7B26-021
3	7B26-019
4	M6-8

F6