Green Room®

BY WILLAB GARDEN

| | | | |
|---|---|---|---|
| 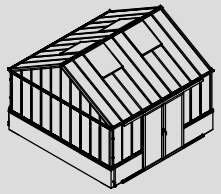 | 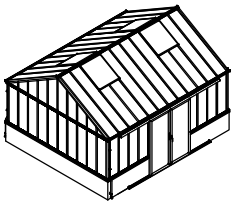 | 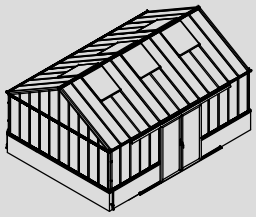 | 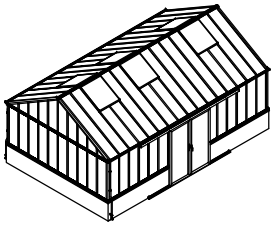 |
| 3054-FD | 3055-FD | 3056-FD | 3057-FD |
| 389×389×312cm | 464×389×312cm | 539×389×312cm | 614×389×312cm |

Product size (L×W×H):
Storlek (L×B×H):
Størrelse (L×B×H):
Størrelse (L×B×H):
Koko (P×L×K):
Produktgröße (L×B×H):

Please read carefully before assembling.
Two people are needed.

Läs noggrant innan montering.
Det krävs två personer för montering.

Læs venligst omhyggeligt, før montering.
Der kræves to personer til montering.

Les monteringsanvisningen nøye innen montering.
Det kreves to personer for montering.

Lue ohjeet huolellisesti läpi ennen asentamista.
Asentamiseen tarvitaan kaksi henkilöä.

Bitte vor dem Aufbau sorgfältig lesen.
Zwei Personen werden benötigt.

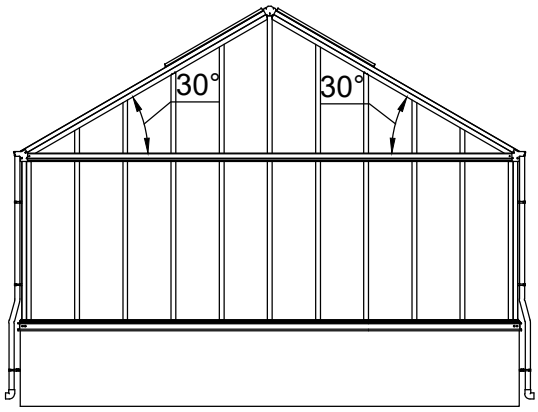


260106

| Part | 3054 | | 3055 | | 3056 | | 3057 | | QTY. | Code | Page |
|---|---|---|---|---|---|---|---|---|---|---|---|
| | NO. | Length(MM) | NO. | Length(MM) | NO. | Length(MM) | NO. | Length(MM) | | | |
| | 40X-Y62-5NR | 3883 | 40X-Y62-6NR | 4634 | 40X-Y62-7NR | 5385 | 40X-Y62-8NR | 6136 | 1 | A003 | P4 |
| | 40A-Y62-5NL | 3883 | 40A-Y62-6NL | 4634 | 40A-Y62-7NL | 5385 | 40A-Y62-8NL | 6136 | 1 | A004 | P4 |
| | 40X-Y63-5 | 3869 | 40X-Y63-6 | 4620 | 40X-Y63-7 | 5371 | 40X-Y63-8 | 6122 | 1 | A005 | P6 |

| Part | NO. | QTY. | | | | Length (MM) | Code | Page |
|---|---|---|---|---|---|---|---|---|
| | | 3054 | 3055 | 3056 | 3057 | | | |
| | 40A-Y30 | 16 | 18 | 20 | 22 | 1235 | | P5 |
| | 50X-Y33R | 4 | 4 | 0 | 0 | 2150 | A015 | P8 |
| | 50X-Y33HR | 0 | 0 | 6 | 6 | 2150 | | |
| | 50X-Y33L | 4 | 4 | 0 | 0 | 2150 | A016 | P8 |
| | 50X-Y33HL | 0 | 0 | 6 | 6 | 2150 | | |
| | 50X-Y33-A | 0 | 2 | 0 | 0 | 2150 | A017 | P8 |
| | 50X-Y33H-A | 0 | 0 | 0 | 2 | 2150 | | |
| | 50X-Y35 | 4 | 5 | 0 | 0 | 1500 | A018 | P9 |
| | 50X-Y35-2460 | 0 | 0 | 6 | 7 | 2460 | | |
| | 40A-Y01 | 22 | 24 | 26 | 28 | 1235 | | P11 |
| | 50X-Y06 | 12 | 14 | 16 | 18 | 2190 | | P15 |
| | 40X-Y07 | 4 | 4 | 6 | 6 | 712 | | P15 |
| | 40X-Y80E-A | 4 | 4 | 6 | 6 | 801 | | P25 |

| Part | NO. | QTY. | | | | Length (MM) | Code | Page |
|---|---|---|---|---|---|---|---|---|
| | | 3054 | 3055 | 3056 | 3057 | | | |
| | 40X-Y81E | 8 | 8 | 12 | 12 | 882 | | P25 |

| Part | NO. | QTY. | Length(MM) | Page |
|---|---|---|---|---|
| | 40A-Y20 | 4 | 1236 | P3 |
| | 50X-Y60 | 1 | 3774 | P4 |
| | 50A-Y61 | 1 | 3774 | P4 |
| | 50X-Y31R | 2 | 633 | P6 |
| | 50X-Y31L | 2 | 633 | P6 |
| | 50X-Y32 | 2 | 1075 | P6 |
| | 50X-Y21 | 2 | 2189 | P7 |
| | 50X-Y22 | 2 | 2189 | P7 |
| | 40A-Y02 | 2 | 1235 | P11 |
| | 50X-Y03 | 2 | 1075 | P13~14 |
| | 50X-Y04R | 2 | 633 | P13~14 |
| | 50X-Y04L | 2 | 633 | P13~14 |
| | 50X-Y05R | 2 | 2149 | P13~14 |
| | 50X-Y05L | 2 | 2149 | P13~14 |
| | 40A-Y90 | 2 | 1866 | P18 |
| | 40A-Y91R | 1 | 1866 | P18 |
| | 40A-Y91L | 1 | 1866 | P18 |
| | 40A-Y92R | 1 | 769 | P18 |
| | 40A-Y92L | 1 | 769 | P18 |
| | 40A-Y93 | 2 | 769 | P18 |
| | 40A-Y95 | 4 | 1765 | P19 |
| | 40A-Y96 | 4 | 668 | P19 |
| | 40A-Y97-A | 2 | 1851 | P21 |
| | 40A-Y97R | 1 | 1860 | P21 |
| | 40A-Y97L | 1 | 1860 | P21 |
| | 40A-Y94 | 1 | 1835 | P21 |
| | 40A-Y98-R | 1 | 1910 | P22 |
| | 40A-Y98-L | 1 | 1910 | P22 |
| | 40A-Y99 | 1 | 1424 | P22 |
| | 40A-Y100 | 1 | 1424 | P22 |

| Part | NO. | QTY. | Length(MM) | Page |
|---|---|---|---|---|
| | 50A-Y64 | 1 | 3768 | P23 |
| | 40A-Y17N | 1 | 3110 | P23 |
| | 40A-Y98A-R | 1 | 1855 | P23 |
| | 40A-Y98A-L | 1 | 1855 | P23 |

| Part | NO. | QTY. | | | | Length (MM) | Code | Page |
|---|---|---|---|---|---|---|---|---|
| | | 3054 | 3055 | 3056 | 3057 | | | |
| | W06 | 20 | 20 | 28 | 28 | 46 | | P2~25 |
| | J09 | 40 | 40 | 56 | 56 | PCS | | P2~25 |
| | Si6-16 | 154 | 174 | 194 | 214 | PCS | | P3~22 |
| | J05 | 167 | 187 | 207 | 227 | PCS | | P3~22 |
| | L04 | 4 | 4 | 0 | 0 | 2580 | A019 | P7 |
| | L25 | 0 | 0 | 4 | 4 | 3073 | | |
| | S6-10 | 24 | 24 | 28 | 28 | PCS | | P7 |
| | Mi6 | 24 | 24 | 28 | 28 | PCS | | P7 |
| | Si5-16 | 16 | 16 | 24 | 24 | PCS | | P8 |
| | J01 | 16 | 16 | 24 | 24 | PCS | | P8 |
| | W04 | 32 | 32 | 40 | 40 | PCS | | P18~26 |
| | T07 | 8 | 8 | 12 | 12 | PCS | | P27 |
| | | | | | | | | |
| | 7C26-007N | 24.5M | 26M | 27.5M | 29M | | | P12~16 |
| | 7C26-009A | 5M | 6.5M | 6.5M | 8M | | | P16 |
| | MCJT002 | 25M | 25M | 32M | 32M | | | P20~26 |

| Part | NO. | QTY. | Length(MM) | Page |
|---|---|---|---|---|
| | 7B26-025 | 8 | PCS | P2 |
| | PS8-80 | 16 | PCS | P2 |
| | 7B26-017 | 4 | PCS | P3 |
| | M6-8 | 24 | PCS | P3~7 |
| | J08 | 1 | PCS | P3 |
| | 7B26-029 | 4 | PCS | P4 |
| | M6-20 | 8 | PCS | P4 |
| | 7B26-033 | 4 | PCS | P7 |
| | 7B26-005 | 4 | PCS | P7 |
| | Si6-12 | 4 | PCS | P7 |
| | W03 | 8 | 30 | P18 |
| | Z4.2-13 | 36 | PCS | P21~30 |
| | T04 | 2 | PCS | P21 |
| | Z4.2-38 | 3 | PCS | P21 |
| | Z3.5-25 | 8 | PCS | P21~25 |
| | M6-35 | 2 | PCS | P22 |
| | Si6-35 | 6 | PCS | P22 |
| | PS6-60 | 2 | PCS | P22 |
| | 7C28-004 | 5 | PCS | P23 |
| | Z4.2-50 | 5 | PCS | P23 |
| | Si6-25 | 3 | PCS | P23 |
| | 7C26-031 | 2 | PCS | P23 |
| | T01N | 1 | PCS | P25 |
| | T01A | 1 | PCS | P25 |
| | J02 | 2 | PCS | P25 |
| | 7B26-039 | 2 | PCS | P25 |
| | 7B26-038 | 2 | PCS | P25 |
| | M4-40 | 2 | PCS | P25 |
| | Mi4-17 | 2 | PCS | P25 |
| | 7C33-S02 | 2 | PCS | P28 |

| Part | NO. | QTY. | Length(MM) | Page |
|---|---|---|---|---|
| | 7C33-S03 | 4 | PCS | P29 |
| | Z4.8-25 | 4 | PCS | P29 |
| | 7C33-S04 | 2 | PCS | P29 |
| | J07-A | 2 | PCS | P29 |
| | J07-B | 2 | PCS | P29 |
| | 7B26-009C | 2 | PCS | P30 |
| | T10 | 4 | PCS | P30 |
| | T10A | 4 | PCS | P30 |
| | Za4.2-13 | 6 | PCS | P30 |
| | | | | |
| | L06 | 8 | 1400 | P4 |
| | NSST120 | 1.9M | | P21 |
| | 7C26-S01A | 2 | 1900 | P29 |
| | | | | |
| | TOOL-001 | 1 | 274 | P2~30 |
| | TOOL-002 | 1 | 80 | P2~30 |
| | TOOL-003A | 1 | 2MM | P5~27 |
| | TOOL-004A | 1 | 3MM | |
| | TOOL-005 | 1 | 4MM | P3~23 |
| | TOOL-006 | 1 | 5MM | P3~26 |

| | Part | NO. | QTY. | Length(MM) | Page | Code |
|---|---|---|---|---|---|---|
| 3043P-S-BASE5 | | 40A-Y11-5 | 1 | 3924 | P2 | A001 |
| | | 40A-Y11-5A | 1 | 3714 | P2 | A002 |
| | | 40X-Y15-5 | 1 | 3900 | P11 | A006 |
| | | 40X-Y62-5A | 1 | 3883 | P17 | A007 |

| | Part | NO. | QTY. | Length(MM) | Page | Code |
|---|---|---|---|---|---|---|
| 3043P-S-BASE6 | | 40A-Y11-6 | 1 | 4675 | P2 | A001 |
| | | 40A-Y11-6A | 1 | 4465 | P2 | A002 |
| | | 40X-Y15-6 | 1 | 4651 | P11 | A006 |
| | | 40X-Y62-6A | 1 | 4634 | P17 | A007 |

| | Part | NO. | QTY. | Length(MM) | Page | Code |
|---|---|---|---|---|---|---|
| 3043P-S-BASE7 | | 40A-Y11-7 | 1 | 5426 | P2 | A001 |
| | | 40A-Y11-7A | 1 | 5216 | P2 | A002 |
| | | 40X-Y15-7 | 1 | 5402 | P11 | A006 |
| | | 40X-Y62-7A | 1 | 5385 | P17 | A007 |

| | Part | NO. | QTY. | Length(MM) | Page | Code |
|---|---|---|---|---|---|---|
| 3043P-S-BASE8 | | 40A-Y11-8 | 1 | 6177 | P2 | A001 |
| | | 40A-Y11-8A | 1 | 5967 | P2 | A002 |
| | | 40X-Y15-8 | 1 | 6153 | P11 | A006 |
| | | 40X-Y62-8A | 1 | 6136 | P17 | A007 |

| | Part | NO. | QTY. | Length(MM) | Page |
|---|---|---|---|---|---|
| 3043PA-S-5G | | 50A-Y12 | 1 | 3924 | P2 |
| | | 50A-Y12-A | 1 | 3774 | P2 |
| | | 40X-Y15-5 | 1 | 3900 | P11 |
| | | 50X-Y60-AN | 1 | 3774 | P17 |

| | Part | NO. | QTY. | Length(MM) | Page | Code |
|---|---|---|---|---|---|---|
| 3043PA-S-5 | | 50A-Y13L | 1 | 1230 | P2 | A008 |
| | | 50A-Y13R | 1 | 1230 | P2 | A009 |
| | | 40A-S11-5AR | 1 | 1125 | P2 | A010 |
| | | 40A-S11-5AL | 1 | 1125 | P2 | A011 |
| | | 50A-Y13L-A | 1 | 1155 | P2 | |
| | | 50A-Y13R-A | 1 | 1155 | P2 | |
| | | 50A-Y15-L | 1 | 1218 | P11 | A012 |
| | | 50A-Y15-R | 1 | 1218 | P11 | A013 |
| | | 40X-Y62-5B | 2 | 430 | P17 | A014 |
| | | 50X-Y61N1 | 2 | 376 | P17 | |

| | Part | NO. | QTY. | Length(MM) | Page | Code |
|---|---|---|---|---|---|---|
| 3043PA-S-6 | | 40A-S11-6R | 1 | 1605 | P2 | A008 |
| | | 40A-S11-6L | 1 | 1605 | P2 | A009 |
| | | 40A-S11-6AR | 1 | 1500 | P2 | A010 |
| | | 40A-S11-6AL | 1 | 1500 | P2 | A011 |
| | | 40A-S15-6R | 1 | 1593 | P11 | A012 |
| | | 40A-S15-6L | 1 | 1593 | P11 | A013 |
| | | 40X-Y62-5B | 2 | 430 | P17 | A015 |
| | | 40X-Y62-6B | 2 | 806 | P17 | |

| | Part | NO. | QTY. | Length(MM) | Page | Code |
|---|---|---|---|---|---|---|
| 3043PA-S-7 | | 40A-S11-7R | 1 | 1981 | P2 | A008 |
| | | 40A-S11-7L | 1 | 1981 | P2 | A009 |
| | | 40A-S11-7AR | 1 | 1876 | P2 | A010 |
| | | 40A-S11-7AL | 1 | 1876 | P2 | A011 |
| | | 40A-S15-7R | 1 | 1969 | P11 | A012 |
| | | 40A-S15-7L | 1 | 1969 | P11 | A013 |
| | | 40X-Y62-6B | 2 | 806 | P17 | A015 |
| | | 40X-Y62-7B | 2 | 1181 | P17 | |

| | Part | NO. | QTY. | Length(MM) | Page | Code |
|---|---|---|---|---|---|---|
| 3043PA-S-8 | | 40A-S11-8R | 1 | 2356 | P2 | A008 |
| | | 40A-S11-8L | 1 | 2356 | P2 | A009 |
| | | 40A-S11-8AR | 1 | 2251 | P2 | A010 |
| | | 40A-S11-8AL | 1 | 2251 | P2 | A011 |
| | | 40A-S15-8R | 1 | 2344 | P11 | A012 |
| | | 40A-S15-8L | 1 | 2344 | P11 | A013 |
| | | 40X-Y62-7B | 2 | 1181 | P17 | A015 |
| | | 40X-Y62-8B | 2 | 1557 | P17 | |

3149P-S

| Part | NO. | QTY. | Length(MM) | Page |
|---|---|---|---|---|
| | 40A-Y30 | 17 | 1235 | P7 |
| | 50X-Y31A-R | 2 | 851 | P7 |
| | 50X-Y31A-L | 2 | 851 | P7 |
| | 40X-Y31R | 2 | 418 | P7 |
| | 40X-Y31L | 2 | 418 | P7 |
| | 40X-Y31A-R | 2 | 201 | P7 |
| | 40X-Y31A-L | 2 | 201 | P7 |
| | 40X-Y34C | 4 | 713 | P9 |
| | 50X-Y33-C | 4 | 1272 | P9 |
| | 50X-Y33-B | 6 | 2150 | P9 |
| | 40A-Y01 | 17 | 1235 | P11 |
| | 50X-Y04A-R | 2 | 851 | P13~14 |
| | 50X-Y04A-L | 2 | 851 | P13~14 |
| | 40X-Y04R | 2 | 418 | P13~14 |
| | 40X-Y04L | 2 | 418 | P13~14 |
| | 40X-Y04A-R | 2 | 201 | P13~14 |
| | 40X-Y04A-L | 2 | 201 | P13~14 |
| | 50X-Y06 | 6 | 2190 | P15 |
| | 50X-Y06A | 4 | 1312 | P15 |
| | 40X-Y82E-A | 4 | 801 | P26 |

| Part | NO. | QTY. | Length(MM) | Page |
|---|---|---|---|---|
| | 7B26-011 | 62 | PCS | P2~8 |
| | Ma6-12 | 62 | PCS | P2~8 |
| | M6 | 62 | PCS | P2~8 |
| | Si6-16 | 124 | PCS | P4~22 |
| | J05 | 124 | PCS | P4~22 |
| | S6-10 | 48 | PCS | P8 |
| | 7B26-005 | 12 | PCS | P8 |
| | Mi6 | 48 | PCS | P8 |
| | Si5-16 | 8 | PCS | P9 |
| | J01 | 8 | PCS | P9 |
| | TOOL-009 | 1 | 341 | P2~8 |

3149P-S-2

| Part | NO. | QTY. | Length(MM) | Page | Part | NO. | QTY. | Length(MM) | Page |
|---|---|---|---|---|---|---|---|---|---|
| | 40A-Y30 | 4 | 1235 | P7 | | 7B26-011 | 14 | PCS | P2~8 |
| | 40X-Y34C | 2 | 713 | P9 | | Ma6-12 | 14 | PCS | P2~8 |
| | 50X-Y33-C | 2 | 1272 | P9 | | M6 | 14 | PCS | P2~8 |
| | 50X-Y33-B | 2 | 2150 | P9 | | Si6-16 | 28 | PCS | P4~22 |
| | 40A-Y01 | 4 | 1235 | P11 | | J05 | 28 | PCS | P4~22 |
| | 50X-Y06 | 2 | 2190 | P15 | | Si5-16 | 4 | PCS | P9 |
| | 50X-Y06A | 2 | 1312 | P15 | | J01 | 4 | PCS | P9 |
| | 40X-Y82E-A | 2 | 801 | P26 | | | | | |

| CTN NO. | QTY. | | | |
|---|---|---|---|---|
| | 3054 | 3055 | 3056 | 3057 |
| 3043P-S-BASE5 | 1 | 0 | 0 | 0 |
| 3043P-S-BASE6 | 0 | 1 | 0 | 0 |
| 3043P-S-BASE7 | 0 | 0 | 1 | 0 |
| 3043P-S-BASE8 | 0 | 0 | 0 | 1 |
| 3043PA-S-5G | 2 | 2 | 2 | 2 |
| 3043PA-S-5 | 1 | 0 | 0 | 0 |
| 3043PA-S-6 | 0 | 1 | 0 | 0 |
| 3043PA-S-7 | 0 | 0 | 1 | 0 |
| 3043PA-S-8 | 0 | 0 | 0 | 1 |
| 3149P-S | 1 | 1 | 1 | 1 |
| 3149P-S-2 | 0 | 1 | 1 | 2 |

| Part | NO. | QTY. | | | | Length(MM) | Page |
|---|---|---|---|---|---|---|---|
| | | 3054 | 3055 | 3056 | 3057 | | |
| | 354×1262 | 36 | 40 | 44 | 48 | 1262 | P10 |
| | 324×203 | 4 | 4 | 4 | 4 | 324 | P13-14 |
| | 354×420 | 4 | 4 | 4 | 4 | 420 | P13-14 |
| | 354×635 | 4 | 4 | 4 | 4 | 635 | P13-14 |
| | 354×852 | 4 | 4 | 4 | 4 | 852 | P13-14 |
| | 354×1068 | 4 | 4 | 4 | 4 | 1068 | P13-14 |
| | 354×2198 | 12 | 16 | 16 | 20 | 2198 | P15 |
| | 354×1320 | 8 | 8 | 12 | 12 | 1320 | P15 |
| | 659×1756 | 2 | 2 | 2 | 2 | 1756 | P19 |
| | 782×863 | 4 | 4 | 6 | 6 | 863 | P26 |

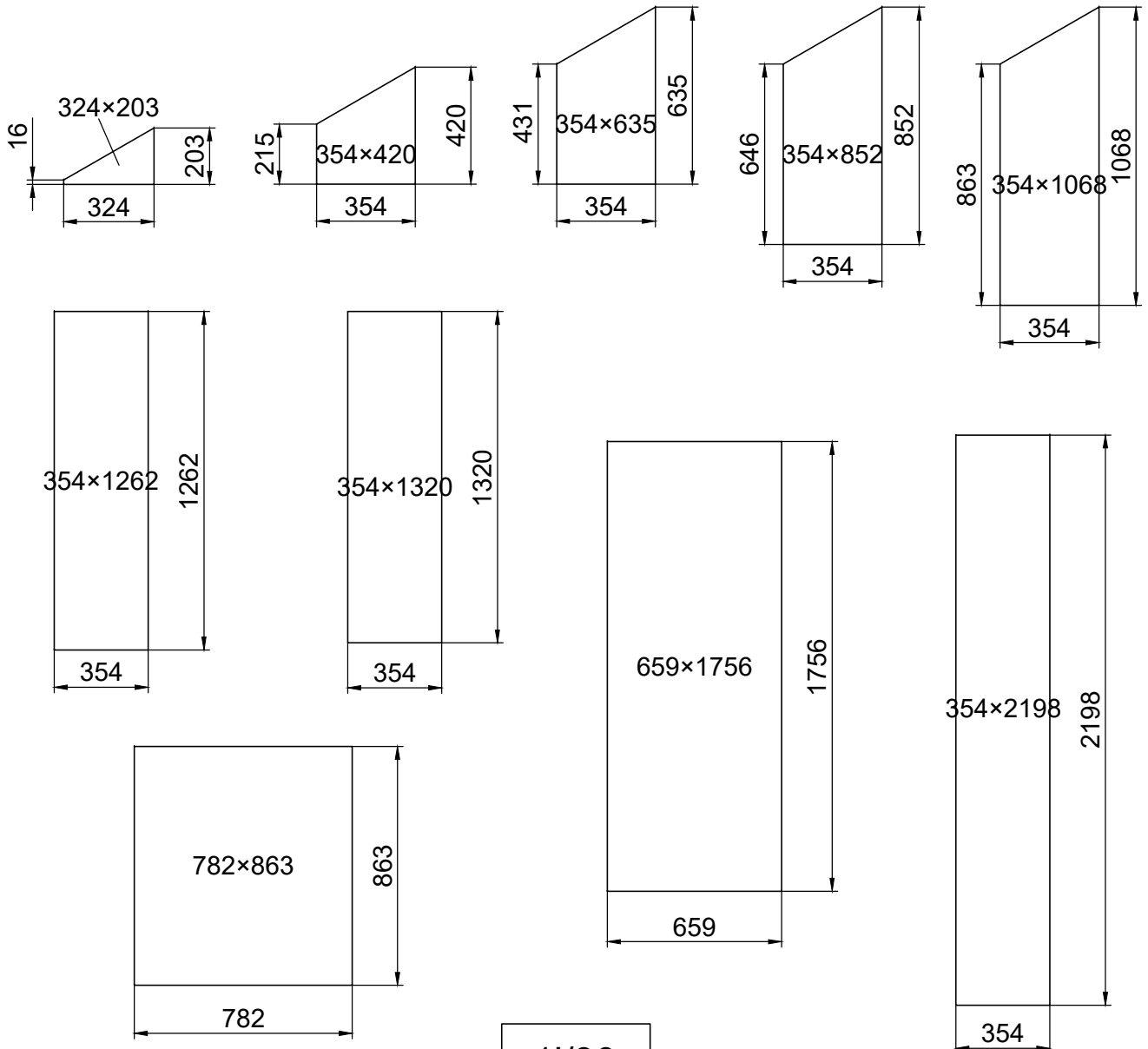

| NO. | 3054 | 3055 | 3056 | 3057 |
|---|---|---|---|---|
| L1 | 3890 | 4641 | 5392 | 6143 |
| L2 | 1208 | 1583 | 1959 | 2334 |
| AREA | 15.1 $M^2$ | 18.1 $M^2$ | 21.0 $M^2$ | 23.9 $M^2$ |

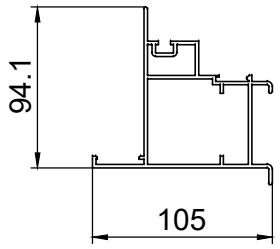


Sealing should be done to prevent frost from destroying the wall. The sealant between the wall and foundation of the greenroom is provided and handled by customers themselves.

Tätning bör göras för att muren ej skall frostsprängas. Tätning mellan mur och sockel står kunden själv för.

Tætningen bør gøres for at forhindre frostsprængninger i muren. Tætningen mellem mur og aluminiumprofil står kunden selv for

En tetning bør lages for å hindre frostsprengning av muren. Tetning mellom mur og sokkel ordnes av kunden selv

Tiivistys täytyy tehdä, jotta muuri ei hajoa pakkasella. Tiiviste muurin ja sokkelin välissä täytyy asiakkaan hoitaa itse

Die Abdichtung sollte erfolgen, um zu verhindern, dass der Frost die Wand zerstört. Die Abdichtung zwischen der Wand und dem Fundament des Greenrooms wird vom Kunden selbst besorgt und durchgeführt.

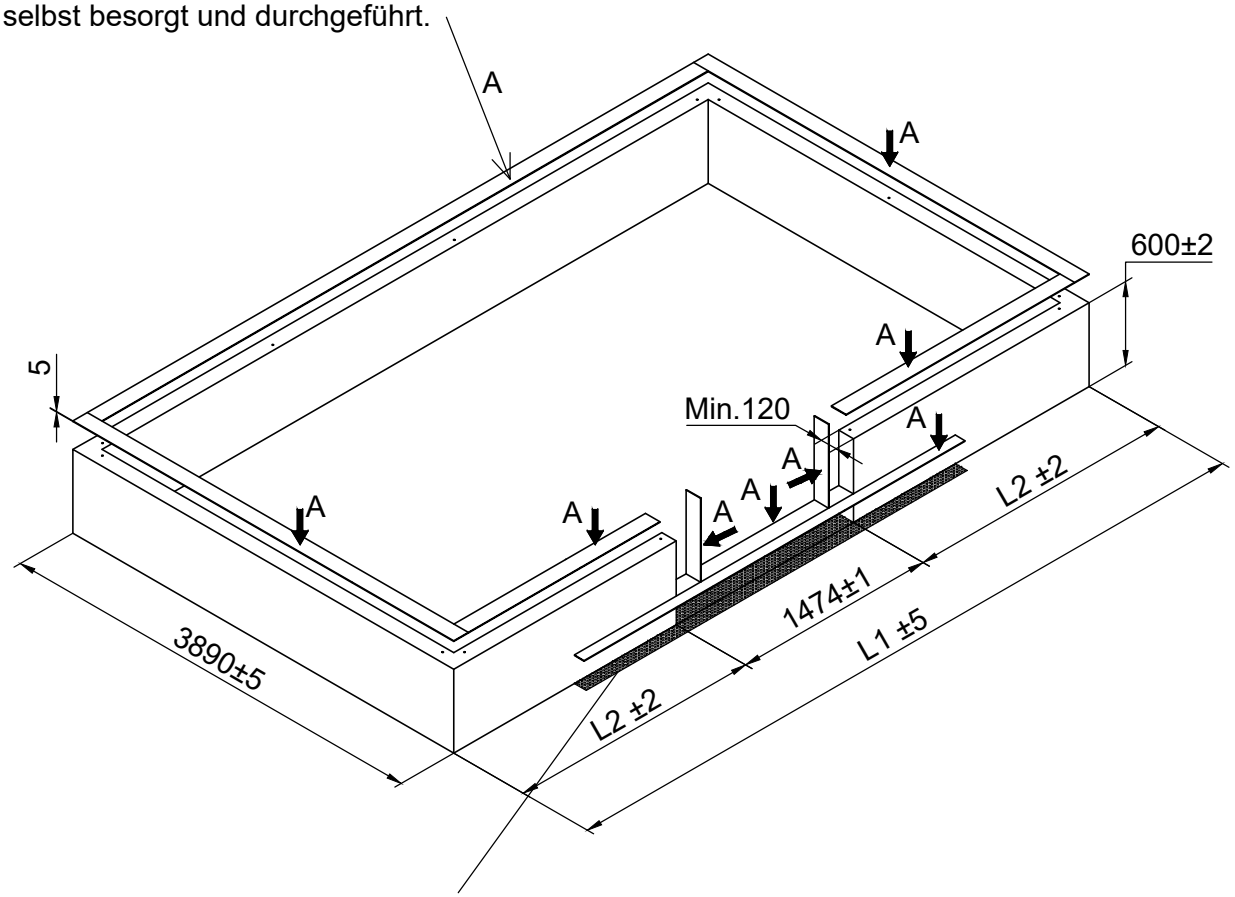


Make sure the floor below the doors frame should be flat and solid.
Se till att underlaget under dörrramen är plan och på solid grund.
Sørg for, at underlaget under dørkarmen er plan og på fast grund.
Sørg for at underlaget under dørterskelen er slett og på solid fundament.
Tarkista, että maa ovikarmin alla on sileä ja tasainen.
Achten Sie darauf, dass der Boden unter dem Türrahmen eben und fest ist.

# TOOL-009(341MM)

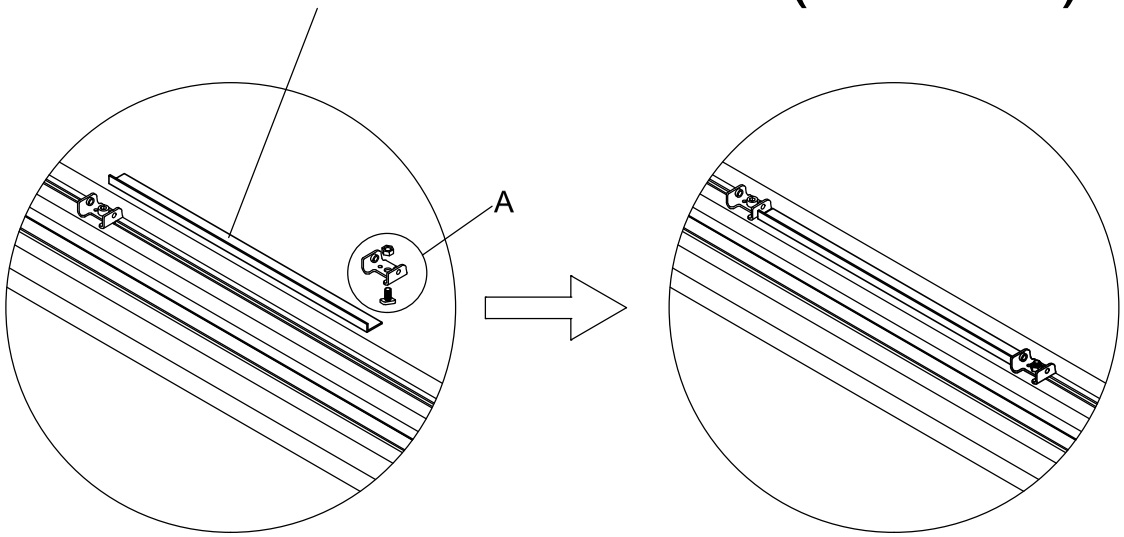


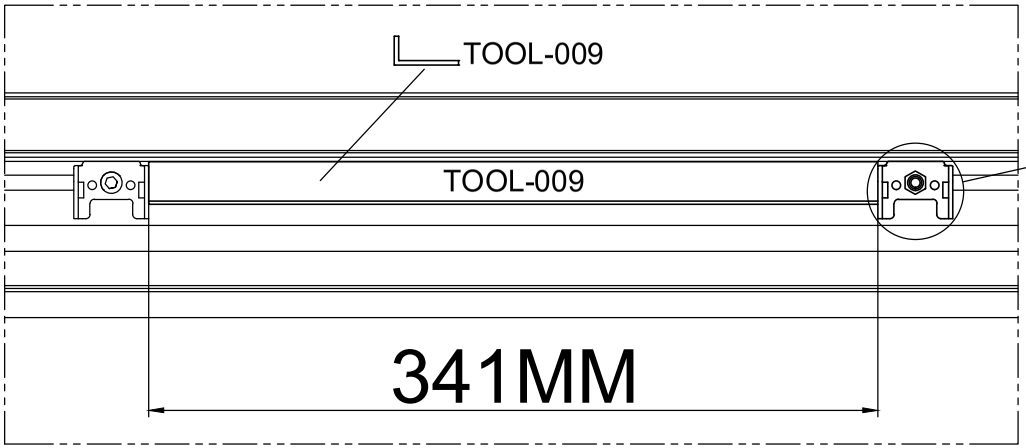


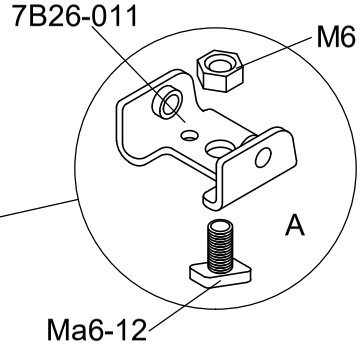

| Part | Product | NO. | Length (MM) | QTY. | CTN NO. | Code |
|---|---|---|---|---|---|---|
| | 3054 | 40A-Y11-5 | 3924 | 1 | 3043P-S-BASE5 | A001 |
| | 3055 | 40A-Y11-6 | 4675 | 1 | 3043P-S-BASE6 | |
| | 3056 | 40A-Y11-7 | 5426 | 1 | 3043P-S-BASE7 | |
| | 3057 | 40A-Y11-8 | 6177 | 1 | 3043P-S-BASE8 | |
| | 3054 | 50A-Y13R | 1230 | 1 | 3043PA-S-5 | A008 |
| | 3055 | 40A-S11-6R | 1605 | 1 | 3043PA-S-6 | |
| | 3056 | 40A-S11-7R | 1980 | 1 | 3043PA-S-7 | |
| | 3057 | 40A-S11-8R | 2356 | 1 | 3043PA-S-8 | |
| | 3054 | 50A-Y13L | 1230 | 1 | 3043PA-S-5 | A009 |
| | 3055 | 40A-S11-6L | 1605 | 1 | 3043PA-S-6 | |
| | 3056 | 40A-S11-7L | 1980 | 1 | 3043PA-S-7 | |
| | 3057 | 40A-S11-8L | 2356 | 1 | 3043PA-S-8 | |

| Part | NO. | QTY. | | | | | | | | Length (MM) |
|---|---|---|---|---|---|---|---|---|---|---|
| | | 3054 | | 3055 | | 3056 | | 3057 | | |
| | | 3149P-S | 3149P-S-2 | 3149P-S | 3149P-S-2 | 3149P-S | 3149P-S-2 | 3149P-S | 3149P-S-2 | |
| | 7B26-011 | 7 | 0 | 10 | 0 | 10 | 1 | 10 | 4 | PCS |
| | Ma6-12 | 7 | 0 | 10 | 0 | 10 | 1 | 10 | 4 | PCS |
| | M6 | 7 | 0 | 10 | 0 | 10 | 1 | 10 | 4 | PCS |

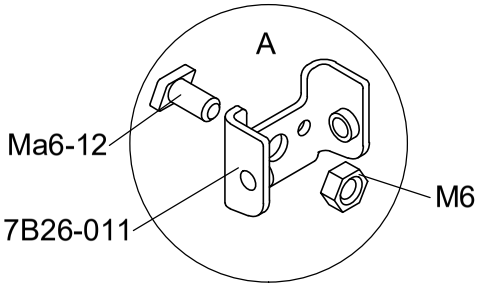


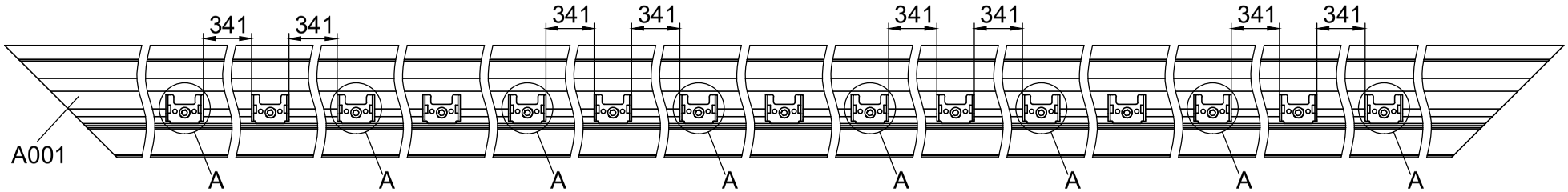


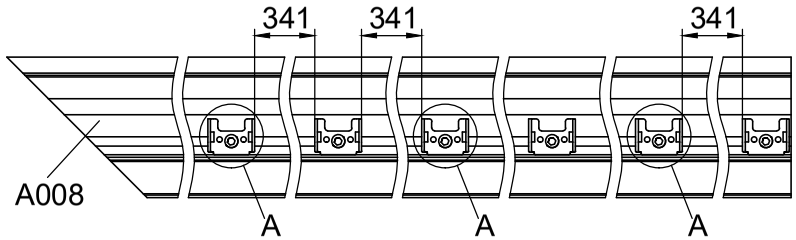


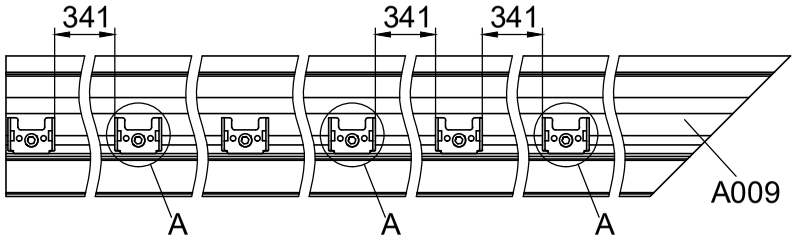

| Part | NO. | QTY. | Length(MM) | CTN NO. |
|---|---|---|---|---|
| | 50A-Y12 | 2 | 3924 | 3043PA-S-5G |

| Part | NO. | QTY. | Length(MM) | CTN NO. |
|---|---|---|---|---|
| | Ma6-12 | 7 | PCS | 3149P-S |
| | 7B26-011 | 7 | PCS | 3149P-S |
| | M6 | 7 | PCS | 3149P-S |

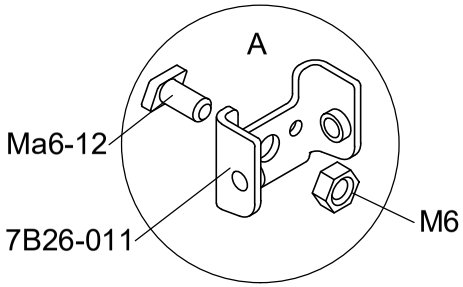


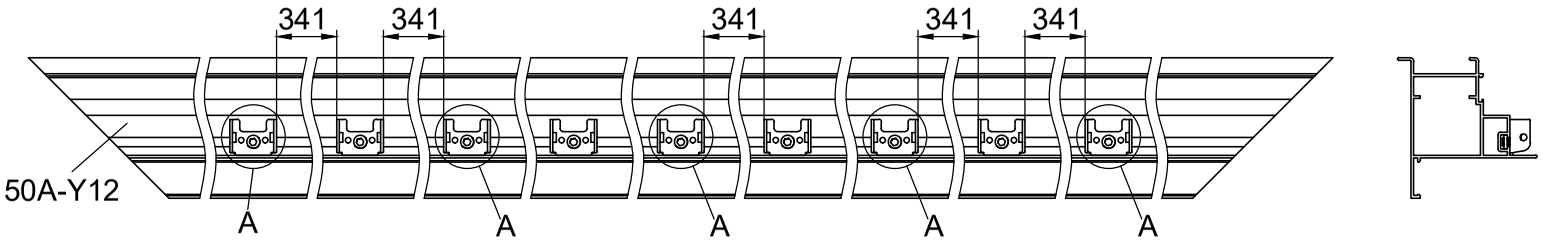

| Part | NO. | QTY. | Length(MM) |
|---|---|---|---|
| | 7B26-025 | 8 | PCS |
| | W06 | 4 | 46 |

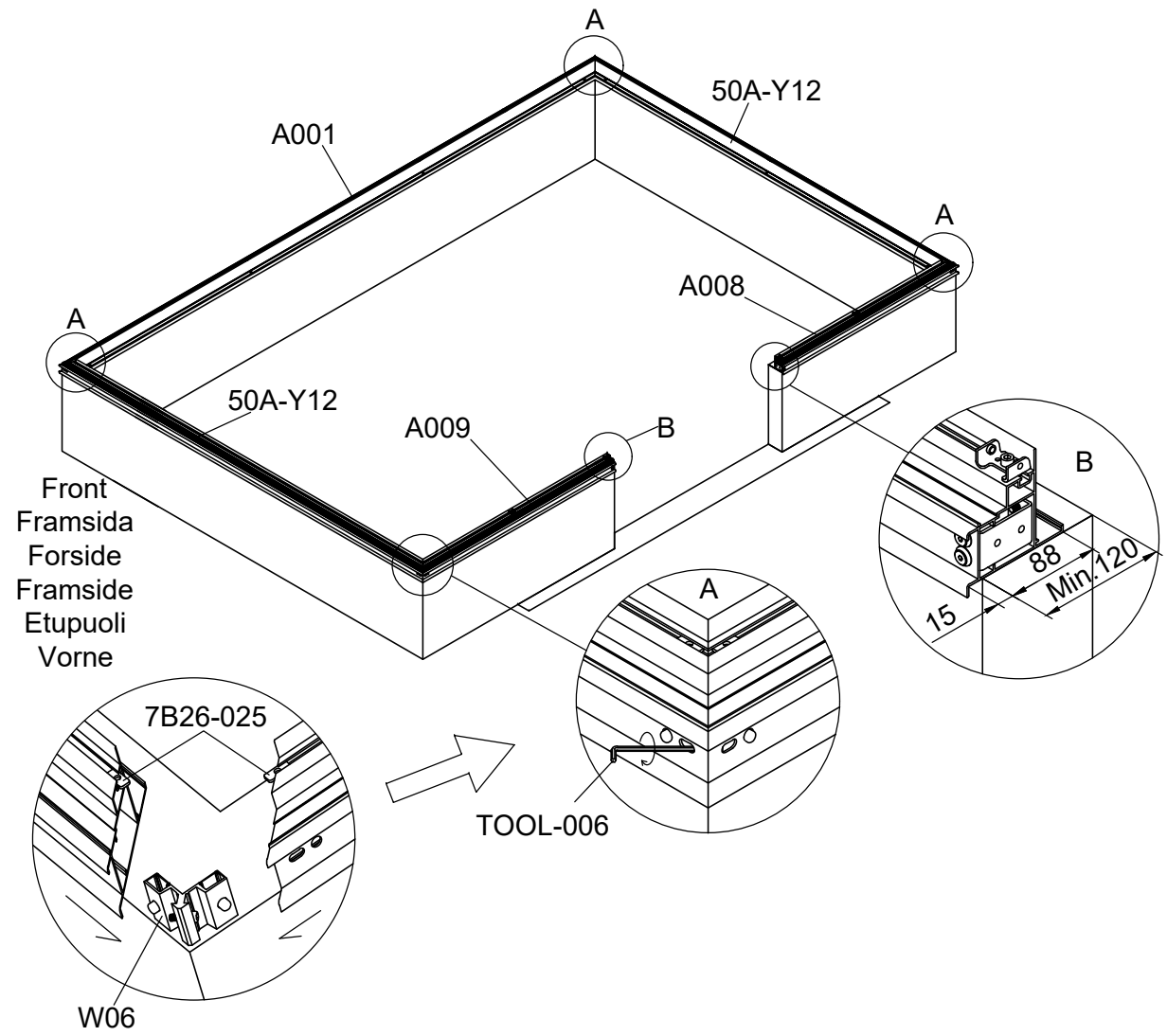

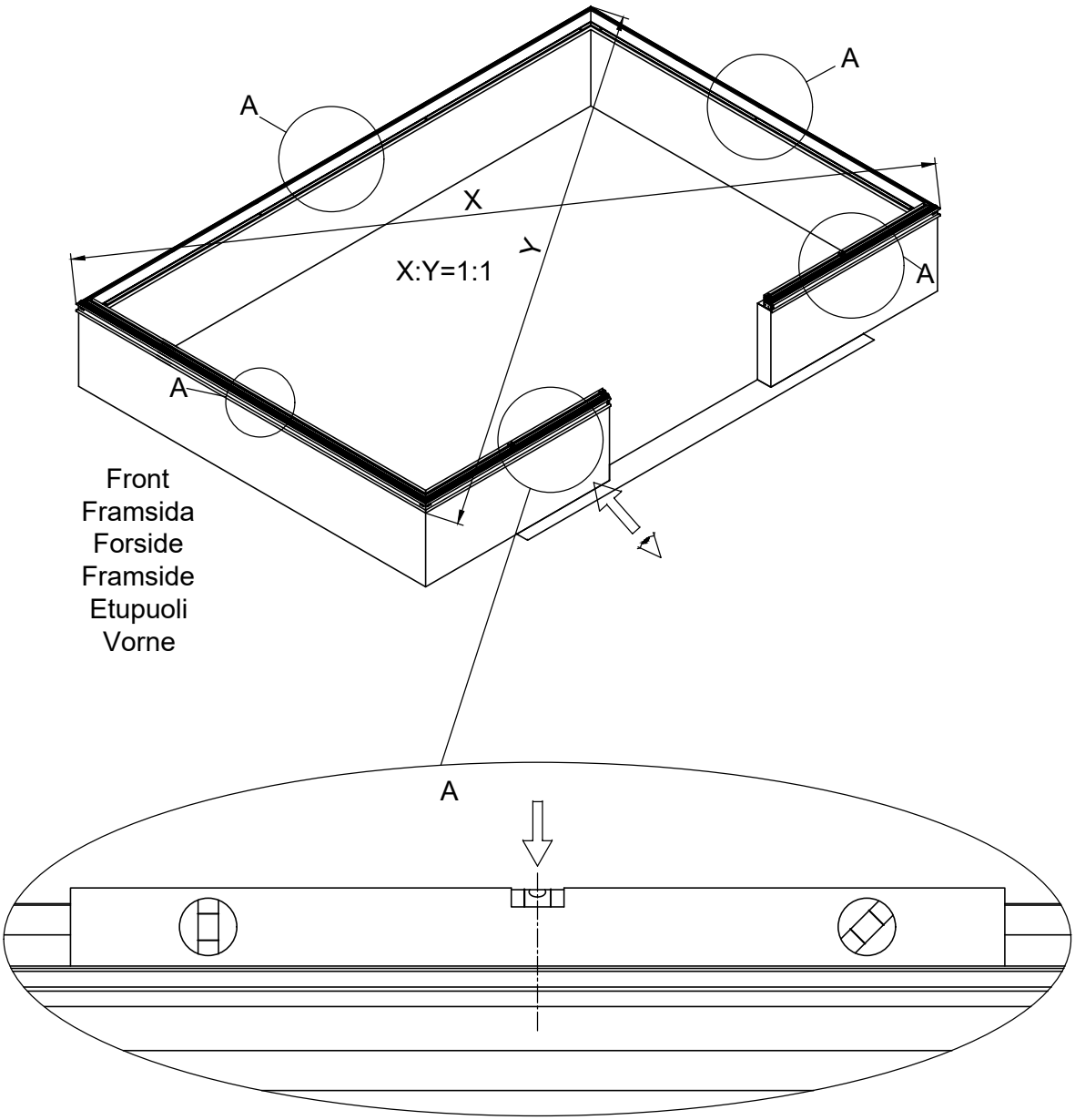
A
A
X
Y
X:Y=1:1
A
A
Front
Framsida
Forside
Framside
Etupuoli
Vorne
A

| Part | NO. | QTY. | Length(MM) |
|---|---|---|---|
| | PS8-80 | 14 | PCS |

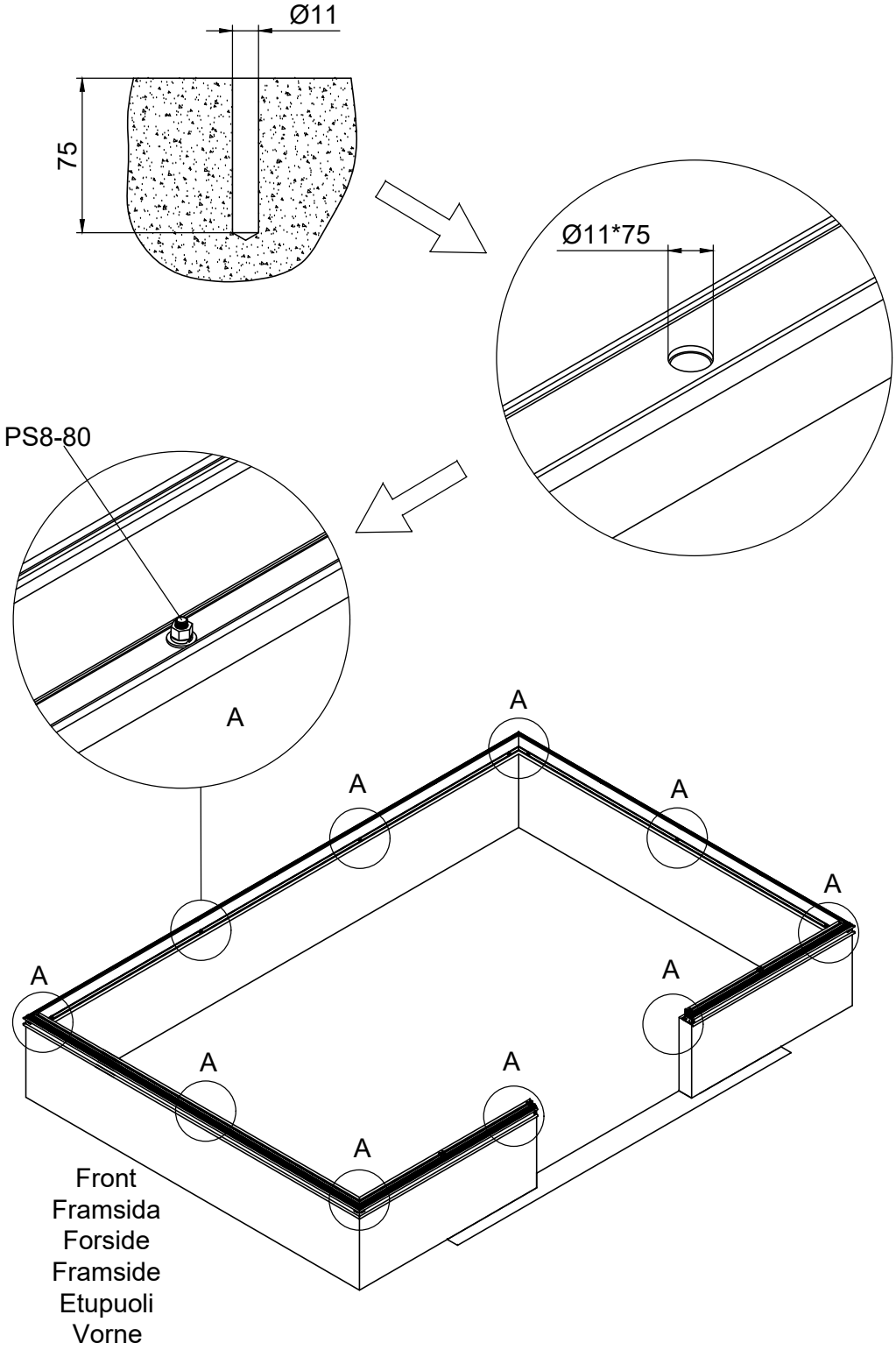

| Part | Product | NO. | Length (MM) | QTY. | CTN NO. | Code |
|---|---|---|---|---|---|---|
| | 3054 | 40A-Y11-5A | 3714 | 1 | 3043P-S-BASE5 | A002 |
| | 3055 | 40A-Y11-6A | 4465 | 1 | 3043P-S-BASE6 | |
| | 3056 | 40A-Y11-7A | 5216 | 1 | 3043P-S-BASE7 | |
| | 3057 | 40A-Y11-8A | 5967 | 1 | 3043P-S-BASE8 | |
| | 3054 | 40A-S11-5AR | 1125 | 1 | 3043PA-S-5 | A010 |
| | 3055 | 40A-S11-6AR | 1500 | 1 | 3043PA-S-6 | |
| | 3056 | 40A-S11-7AR | 1876 | 1 | 3043PA-S-7 | |
| | 3057 | 40A-S11-8AR | 2251 | 1 | 3043PA-S-8 | |
| | 3054 | 40A-S11-5AL | 1125 | 1 | 3043PA-S-5 | A011 |
| | 3055 | 40A-S11-6AL | 1500 | 1 | 3043PA-S-6 | |
| | 3056 | 40A-S11-7AL | 1876 | 1 | 3043PA-S-7 | |
| | 3057 | 40A-S11-8AL | 2251 | 1 | 3043PA-S-8 | |

| Part | NO. | Length(MM) | QTY. | CTN NO. |
|---|---|---|---|---|
| | 50A-Y12-A | 3774 | 2 | 3043PA-S-5G |

| Part | NO. | QTY. | Length(MM) |
|---|---|---|---|
| | J09 | 8 | PCS |

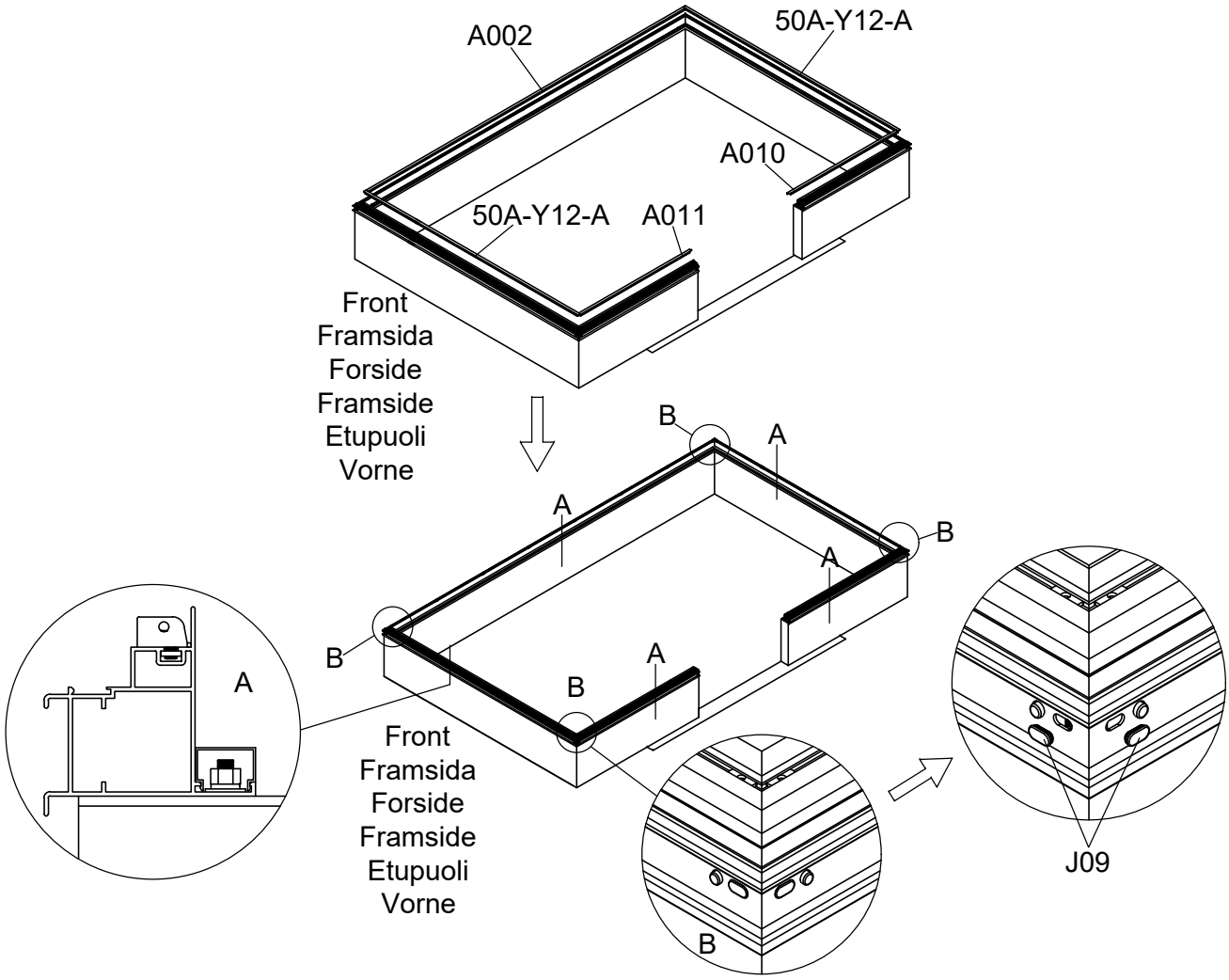

| Part | NO. | QTY. | Length(MM) |
|---|---|---|---|
| | 7B26-017 | 4 | PCS |
| | M6-8 | 8 | PCS |
| | J08 | 1 | PCS |

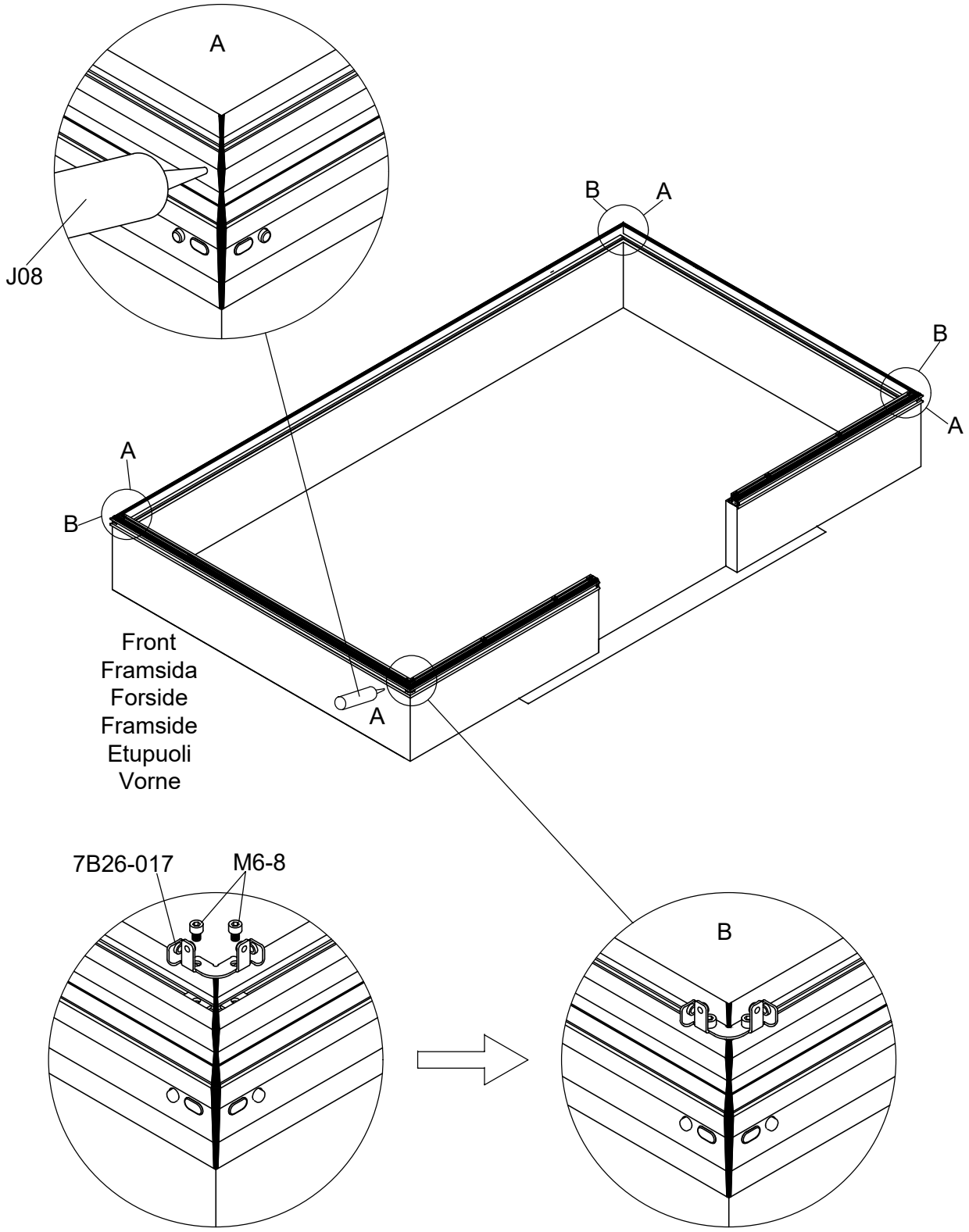

| Part | NO. | QTY. | Length(MM) |
|---|---|---|---|
| | 40A-Y20 | 4 | 1236 |
| | Si6-16 | 8 | PCS |
| | J05 | 8 | PCS |
| | M6-8 | 8 | PCS |

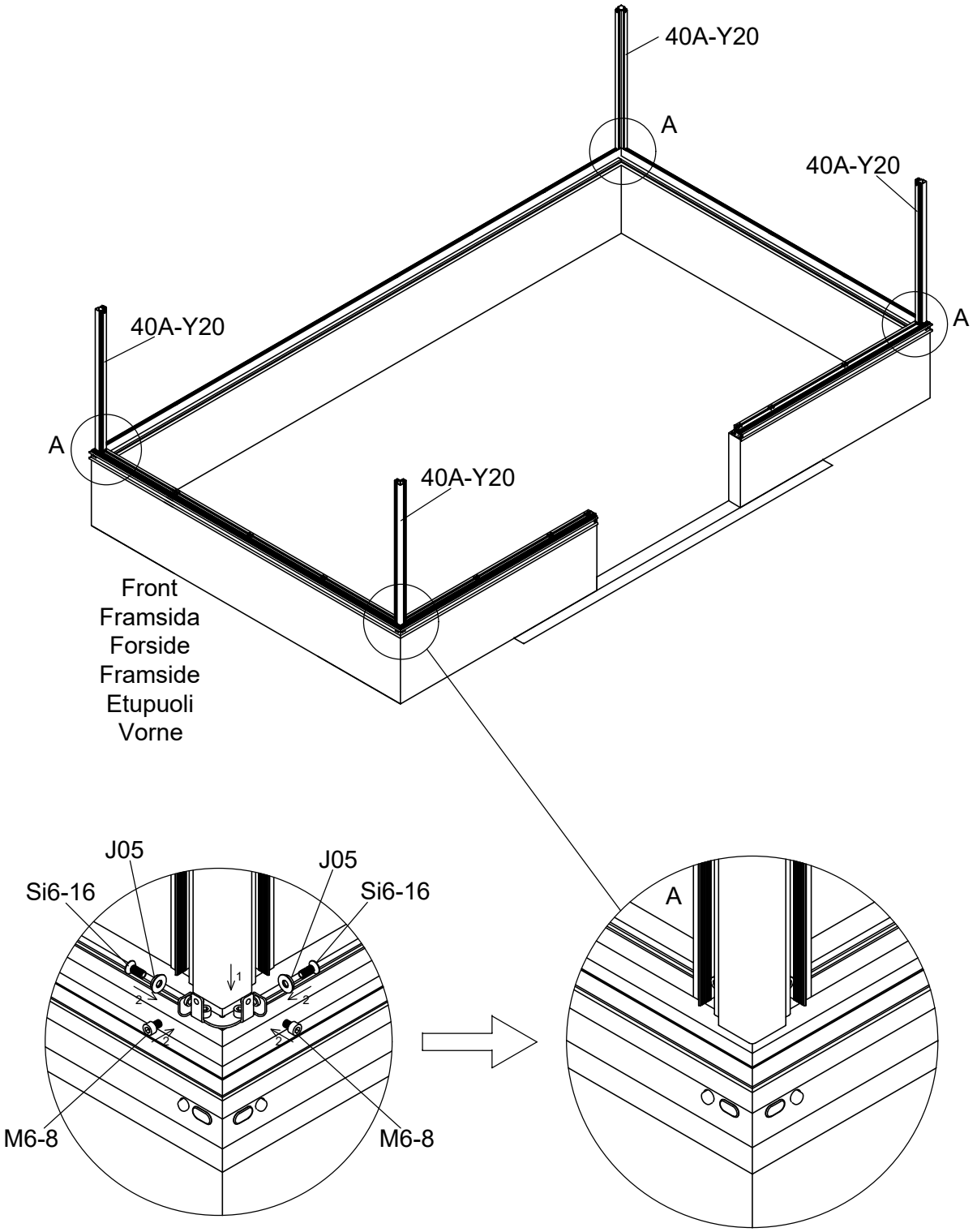

| Part | NO. | QTY. | Length(MM) |
|---|---|---|---|
| | 50X-Y60 | 1 | 3774 |

| Part | NO. | QTY. | Length(MM) | CTN NO. |
|---|---|---|---|---|
| | Ma6-12 | 11 | PCS | 3149P-S |
| | 7B26-011 | 11 | PCS | 3149P-S |
| | M6 | 11 | PCS | 3149P-S |

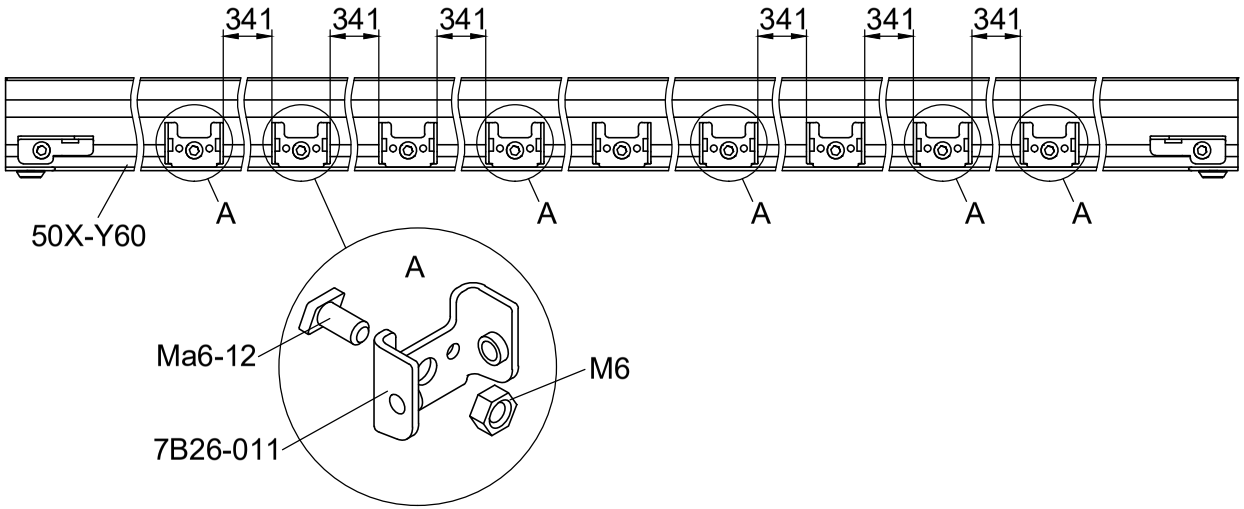


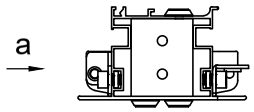


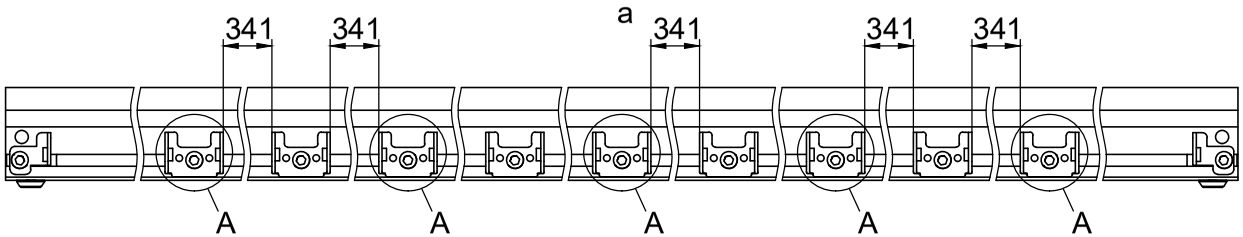

| Part | Product | NO. | Length (MM) | QTY. | Code |
|---|---|---|---|---|---|
| | 3055 | 40X-Y62-6NL | 4634 | 1 | A004 |
| | 3057 | 40A-Y62-8NL | 6136 | | |

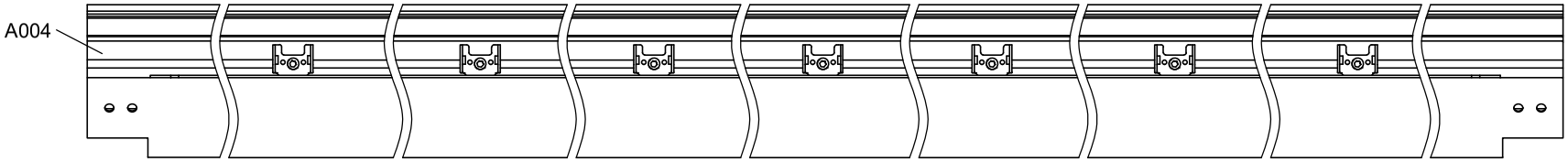


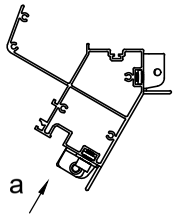


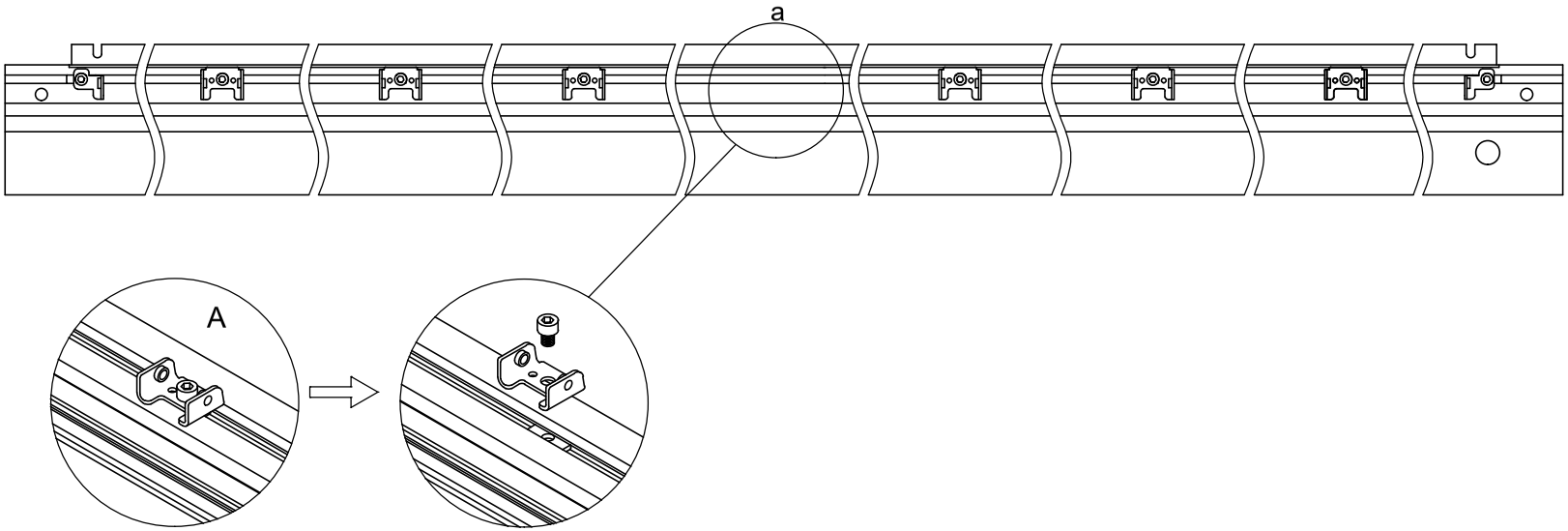


Disassemble this part.
Avmontera fästet från profilen på långsidan.
Afmonter beslaget fra profilen på langsiden.
Demonter festet fra profilen på langsiden.
Irrota profiilin pitkällä sivulla oleva kiinnike.
Demontieren Sie dieses Teil.

| Part | NO. | QTY. | Length(MM) |
|---|---|---|---|
| | 50A-Y61 | 1 | 3774 |

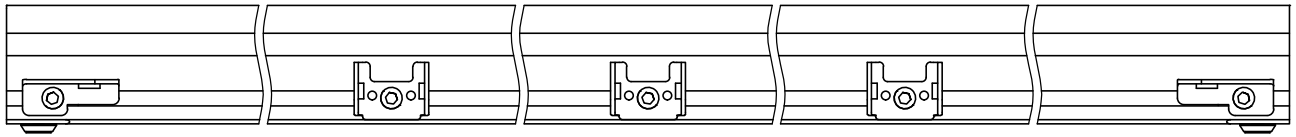

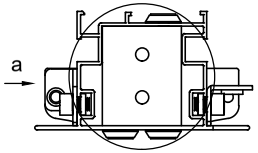


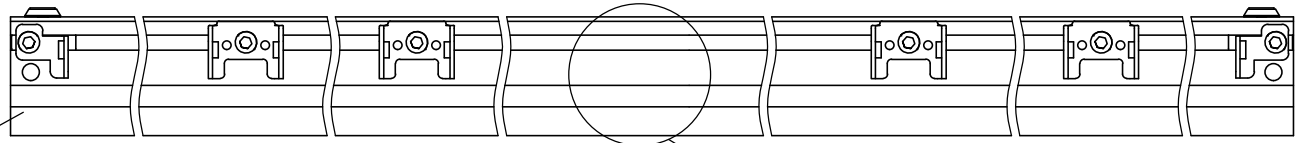


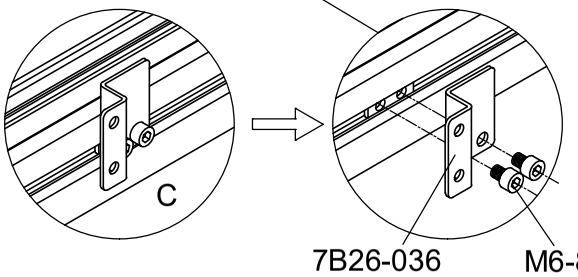


Disassemble this part.
Avmontera fästet från profilen på långsidan.
Afmonter beslaget fra profilen på langsiden.
Demonter festet fra profilen på langsiden.
Irrota profiilin pitkällä sivulla oleva kiinnike.
Demontieren Sie dieses Teil.

| Part | NO. | QTY. | Length(MM) | CTN NO. |
|---|---|---|---|---|
| | Ma6-12 | 11 | PCS | 3149P-S |
| | 7B26-011 | 11 | PCS | 3149P-S |
| | M6 | 11 | PCS | 3149P-S |

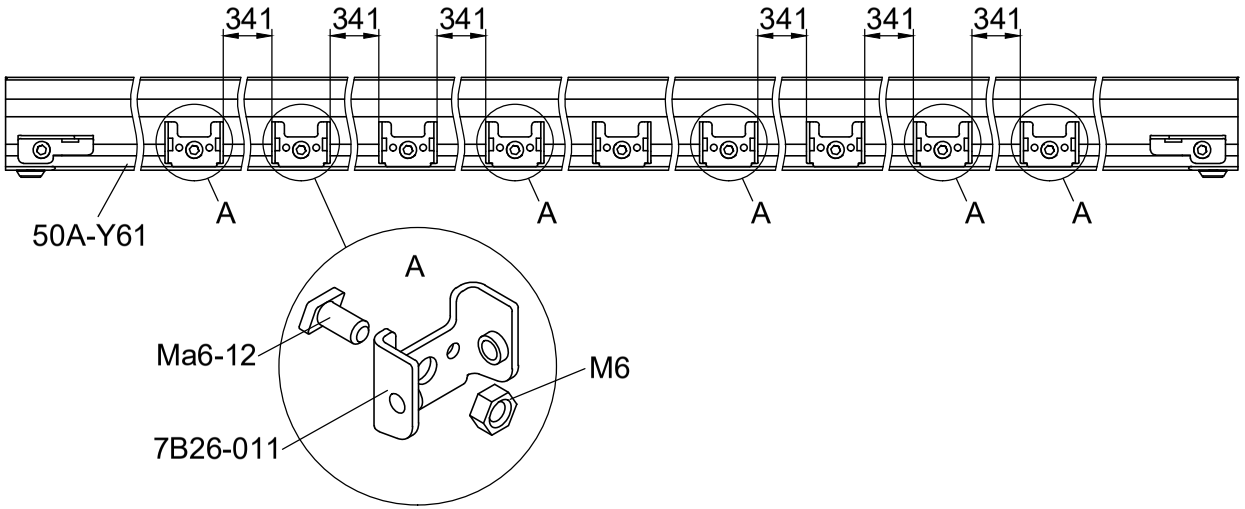


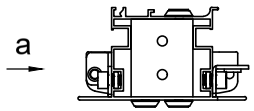


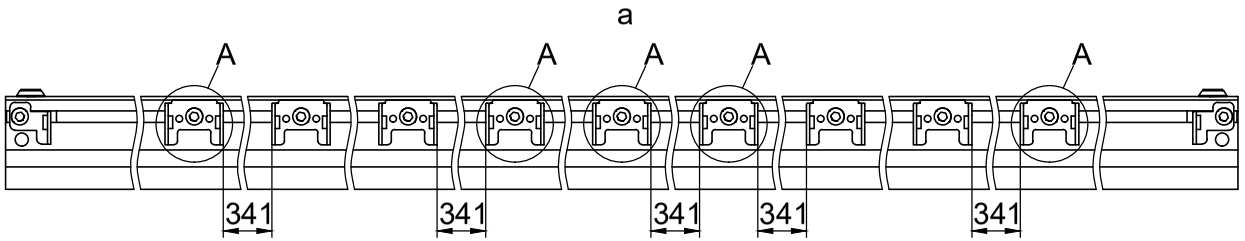

| Part | NO. | QTY. | Length(MM) |
|---|---|---|---|
| | Si6-16 | 4 | PCS |
| | J05 | 4 | PCS |
| | L06 | 4 | 1400 |

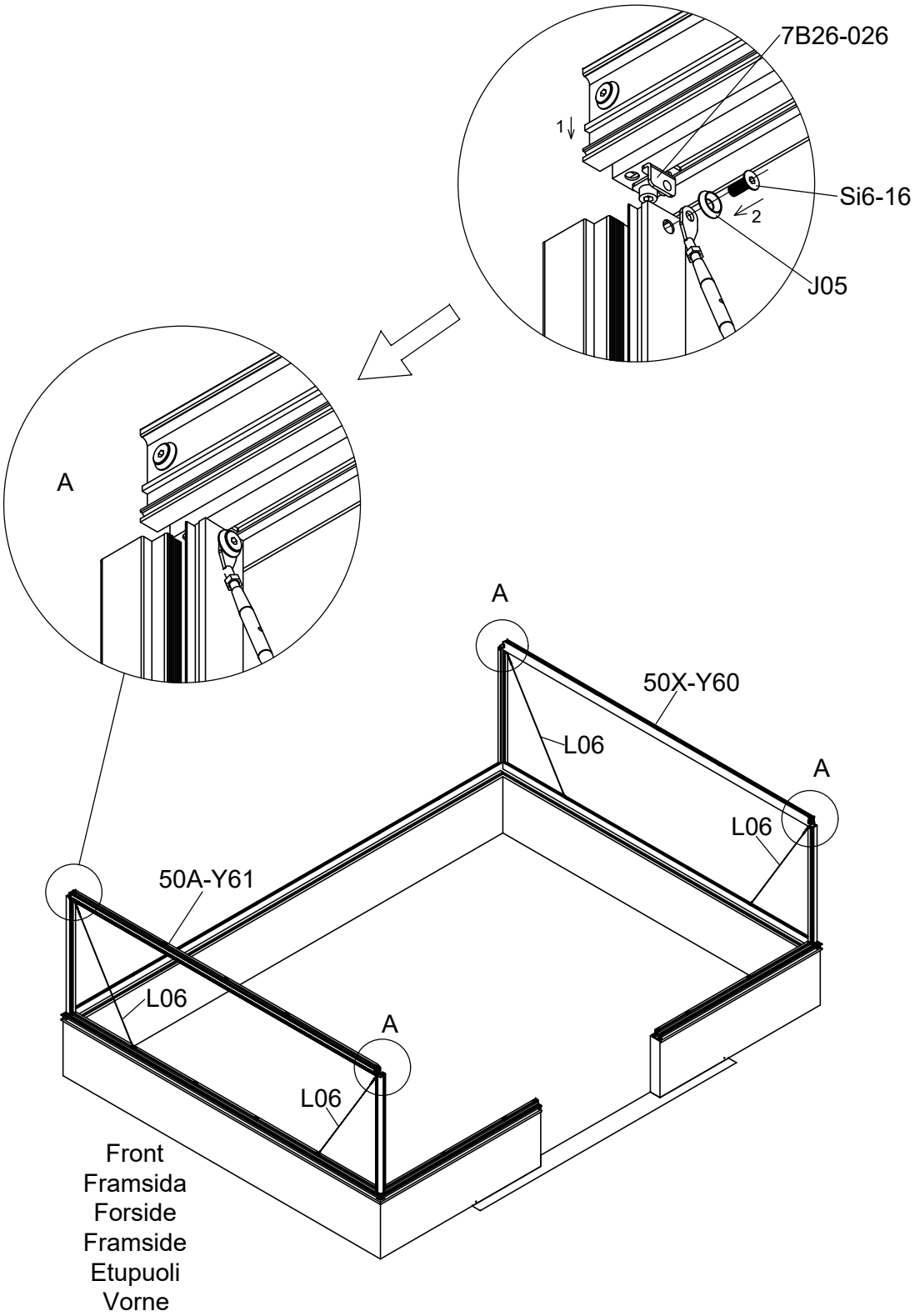

| Part | Product | NO. | Length (MM) | QTY. | Code |
|---|---|---|---|---|---|
| | 3054 | 40X-Y62-5NR | 3924 | 1 | A003 |
| | 3055 | 40X-Y62-6NR | 4675 | | |
| | 3056 | 40X-Y62-7NR | 5426 | | |
| | 3057 | 40X-Y62-8NR | 6177 | | |

| Part | NO. | QTY. | | | | | | | | Length (MM) |
|---|---|---|---|---|---|---|---|---|---|---|
| | | 3054 | | 3055 | | 3056 | | 3057 | | |
| | | 3149P -S | 3149P -S-2 | 3149P -S | 3149P -S-2 | 3149P -S | 3149P -S-2 | 3149P -S | 3149P -S-2 | |
| | 7B26-011 | 10 | 0 | 10 | 2 | 10 | 4 | 10 | 6 | PCS |
| | Ma6-12 | 10 | 0 | 10 | 2 | 10 | 4 | 10 | 6 | PCS |
| | M6 | 10 | 0 | 10 | 2 | 10 | 4 | 10 | 6 | PCS |

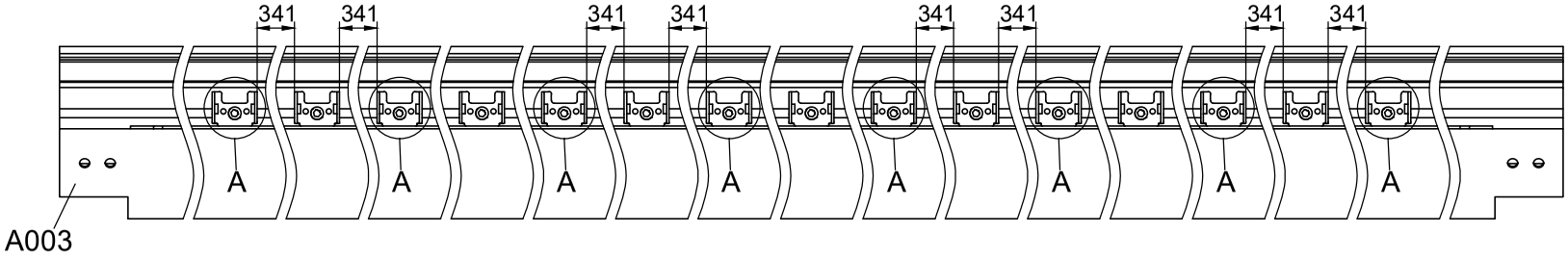


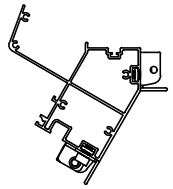

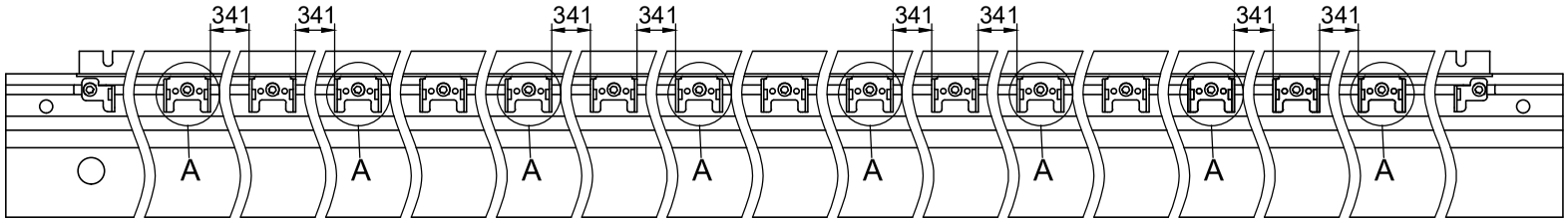


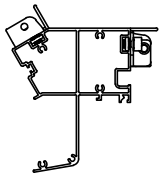

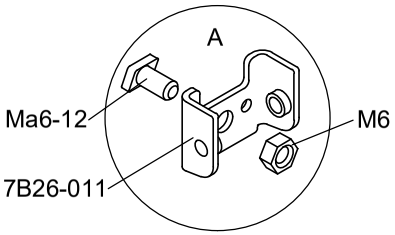

| Part | Product | NO. | Length (MM) | QTY. | Code |
|---|---|---|---|---|---|
| | 3054 | 40A-Y62-5NL | 3883 | 1 | A004 |
| | 3056 | 40A-Y62-7NL | 5385 | | |

| Part | NO. | QTY. | Length(MM) | CTN NO. |
|---|---|---|---|---|
| | 7B26-036 | 1 | PCS | 3040P-D |
| | Ma6-12 | 2 | PCS | 3040P-D |
| | M6 | 2 | PCS | 3040P-D |

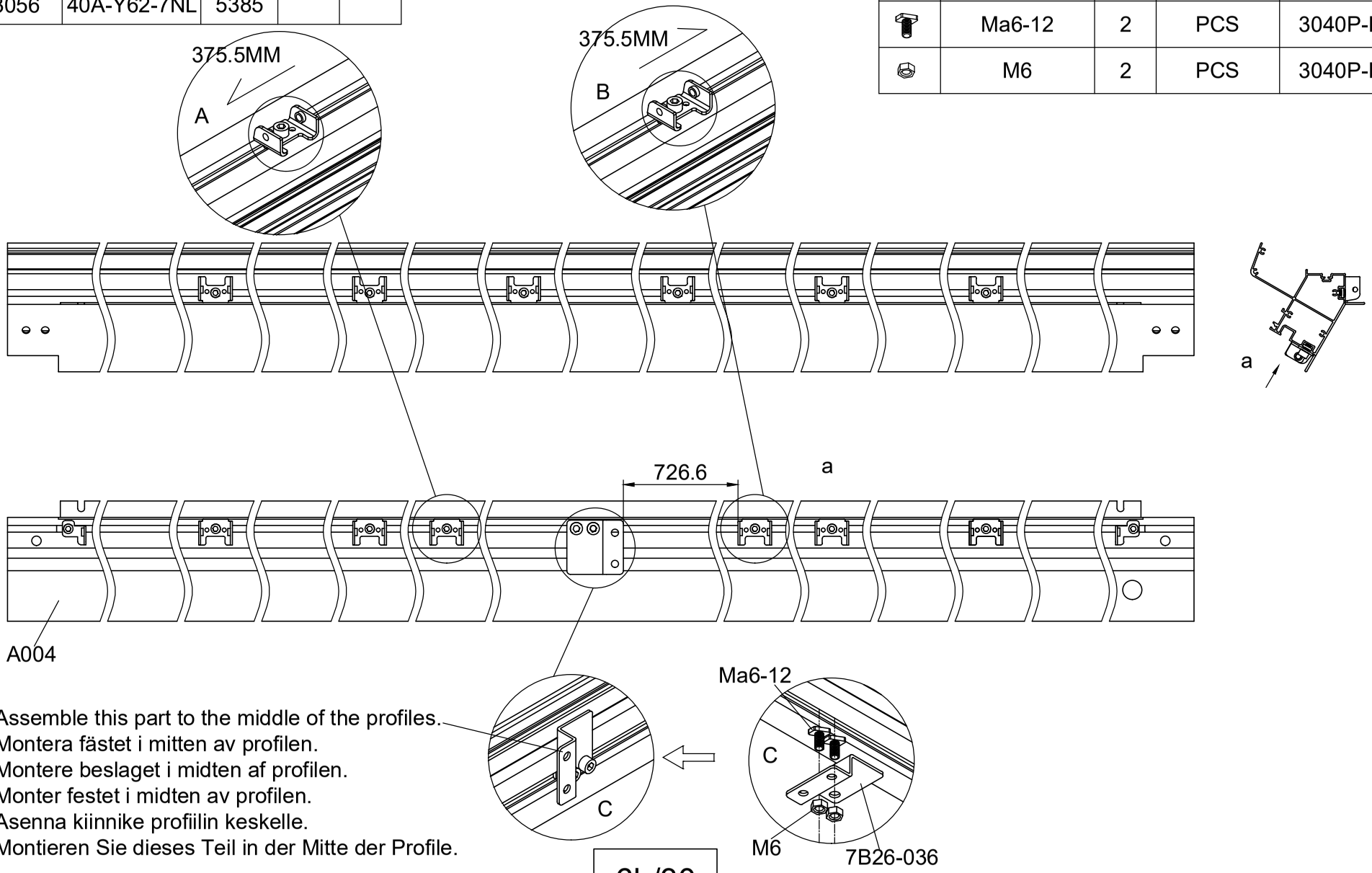


Assemble this part to the middle of the profiles.
Montera fästet i mitten av profilen.
Montere beslaget i midten af profilen.
Monter festet i midten av profilen.
Asenna kiinnike profiilin keskelle.
Montieren Sie dieses Teil in der Mitte der Profile.

| Part | Product | NO. | Length (MM) | QTY. | Code |
|---|---|---|---|---|---|
| | 3055 | 40A-Y62-6NL | 4634 | 1 | A004 |
| | 3057 | 40A-Y62-8NL | 6136 | | |

| Part | NO. | QTY. | Length(MM) | CTN NO. |
|---|---|---|---|---|
| | 7B26-036 | 1 | PCS | 3040P-D |
| | Ma6-12 | 2 | PCS | 3040P-D |
| | M6 | 2 | PCS | 3040P-D |

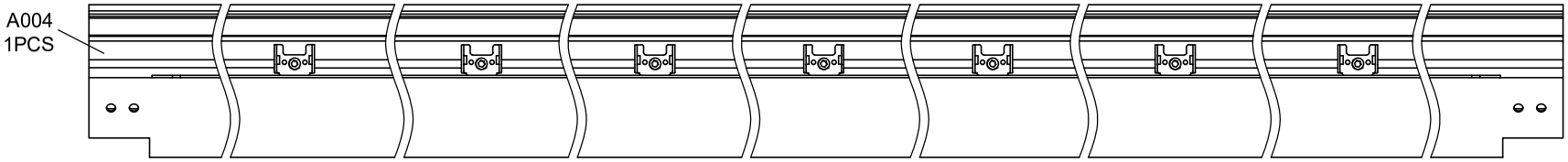


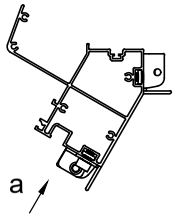


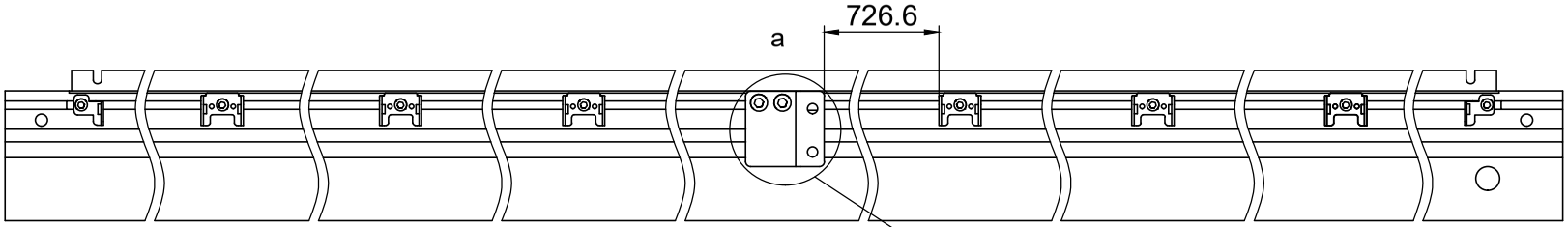


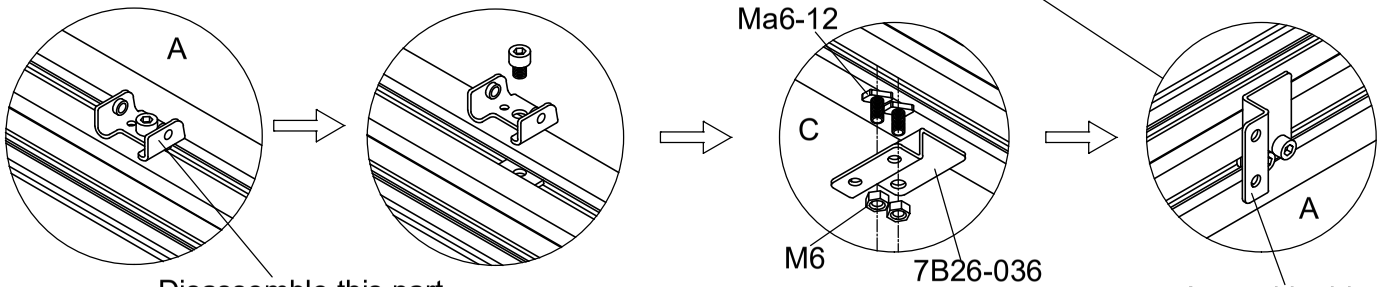


Disassemble this part.
Avmontera fästet från profilen på långsidan.
Afmonter beslaget fra profilen på langsiden.
Demonter festet fra profilen på langsiden.
Irrota profiilin pitkällä sivulla oleva kiinnike.
Demontieren Sie dieses Teil.

Assemble this part to the middle of the profiles.
Montera fästet i mitten av profilen.
Montere beslaget i midten af profilen.
Monter festet i midten av profilen.
Asenna kiinnike profiilin keskelle.
Montieren Sie dieses Teil in der Mitte der Profile.

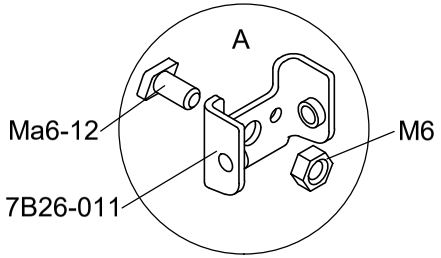


| Part | NO. | QTY. | | | | | | | | Length (MM) |
|---|---|---|---|---|---|---|---|---|---|---|
| | | 3054 | | 3055 | | 3056 | | 3057 | | |
| | | 3149P-S | 3149P -S-2 | 3149P-S | 3149P -S-2 | 3149P-S | 3149P -S-2 | 3149P-S | 3149P -S-2 | |
| | 7B26-011 | 7 | 0 | 10 | 0 | 10 | 1 | 10 | 4 | PCS |
| | Ma6-12 | 7 | 0 | 10 | 0 | 10 | 1 | 10 | 4 | PCS |
| | M6 | 7 | 0 | 10 | 0 | 10 | 1 | 10 | 4 | PCS |

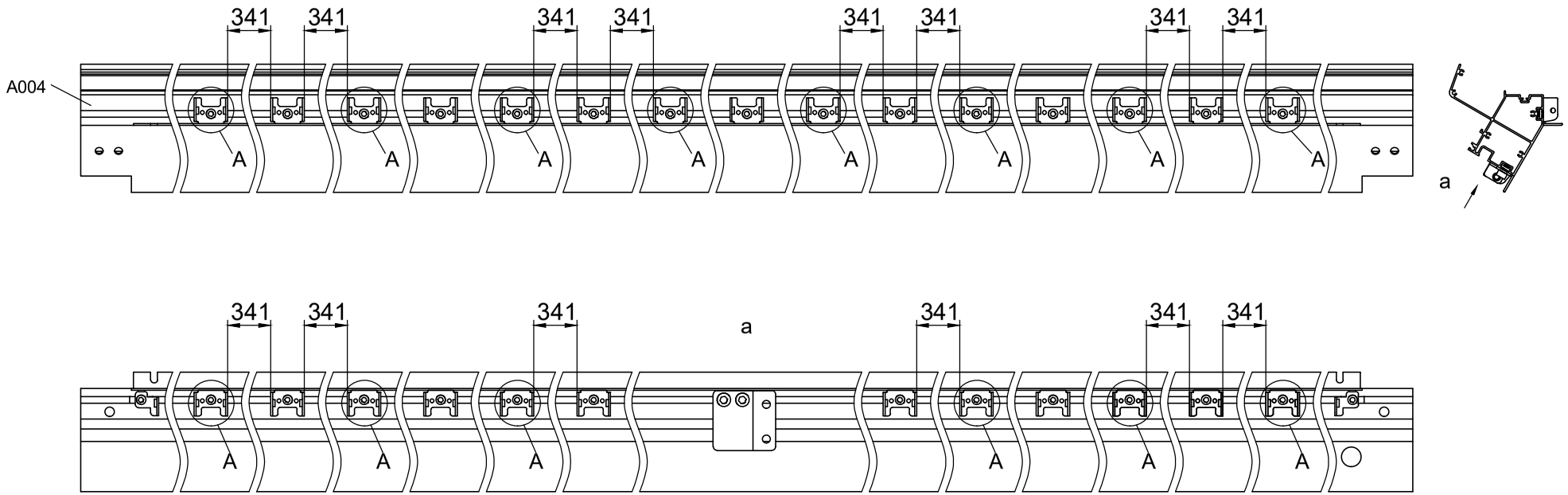

| Part | NO. | QTY. | Length(MM) |
|---|---|---|---|
| | Si6-16 | 4 | PCS |
| | J05 | 4 | PCS |
| | L06 | 4 | 1400 |

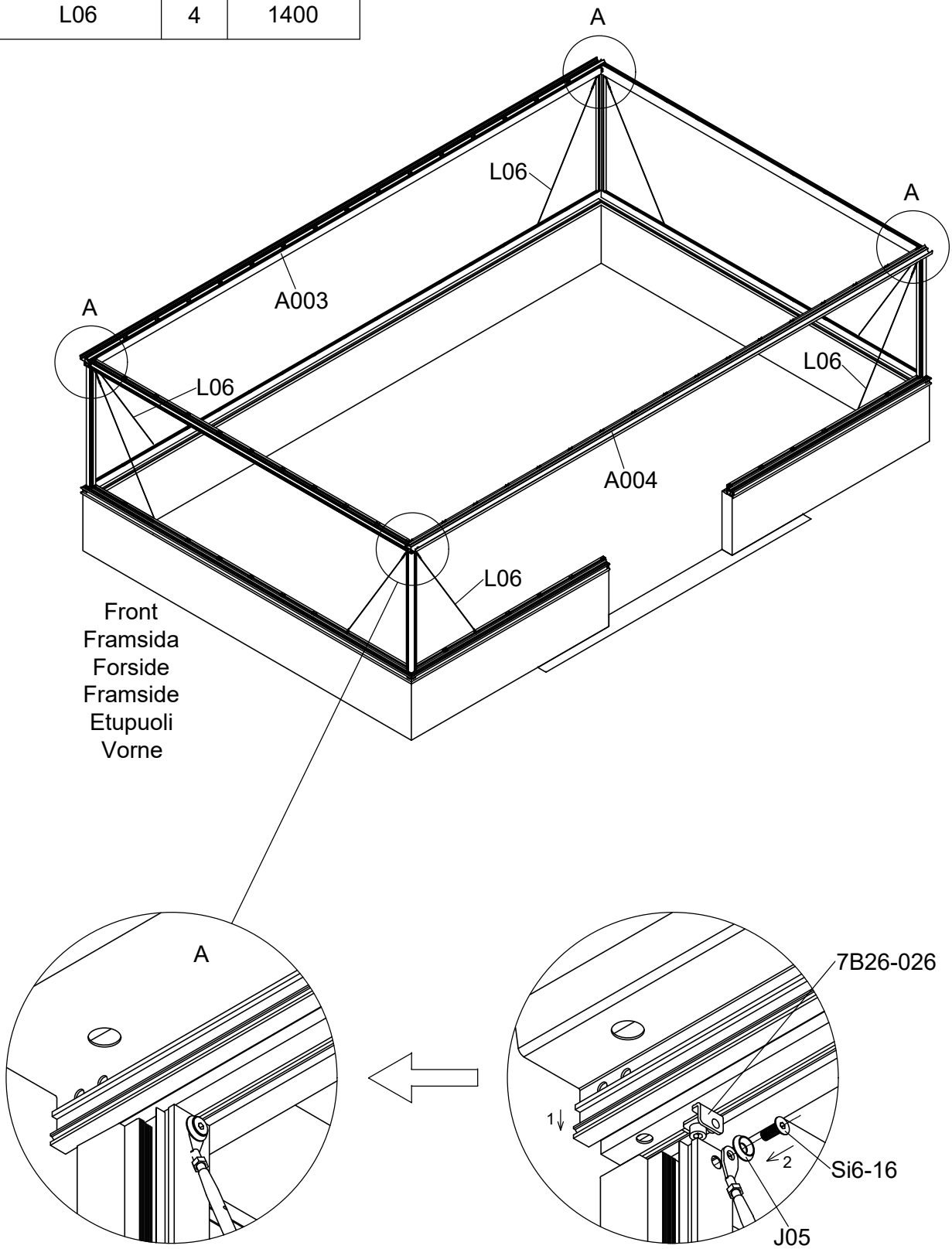

| Part | NO. | QTY. | Length(MM) |
|---|---|---|---|
| | 7B26-029 | 4 | PCS |
| | M6-20 | 8 | PCS |

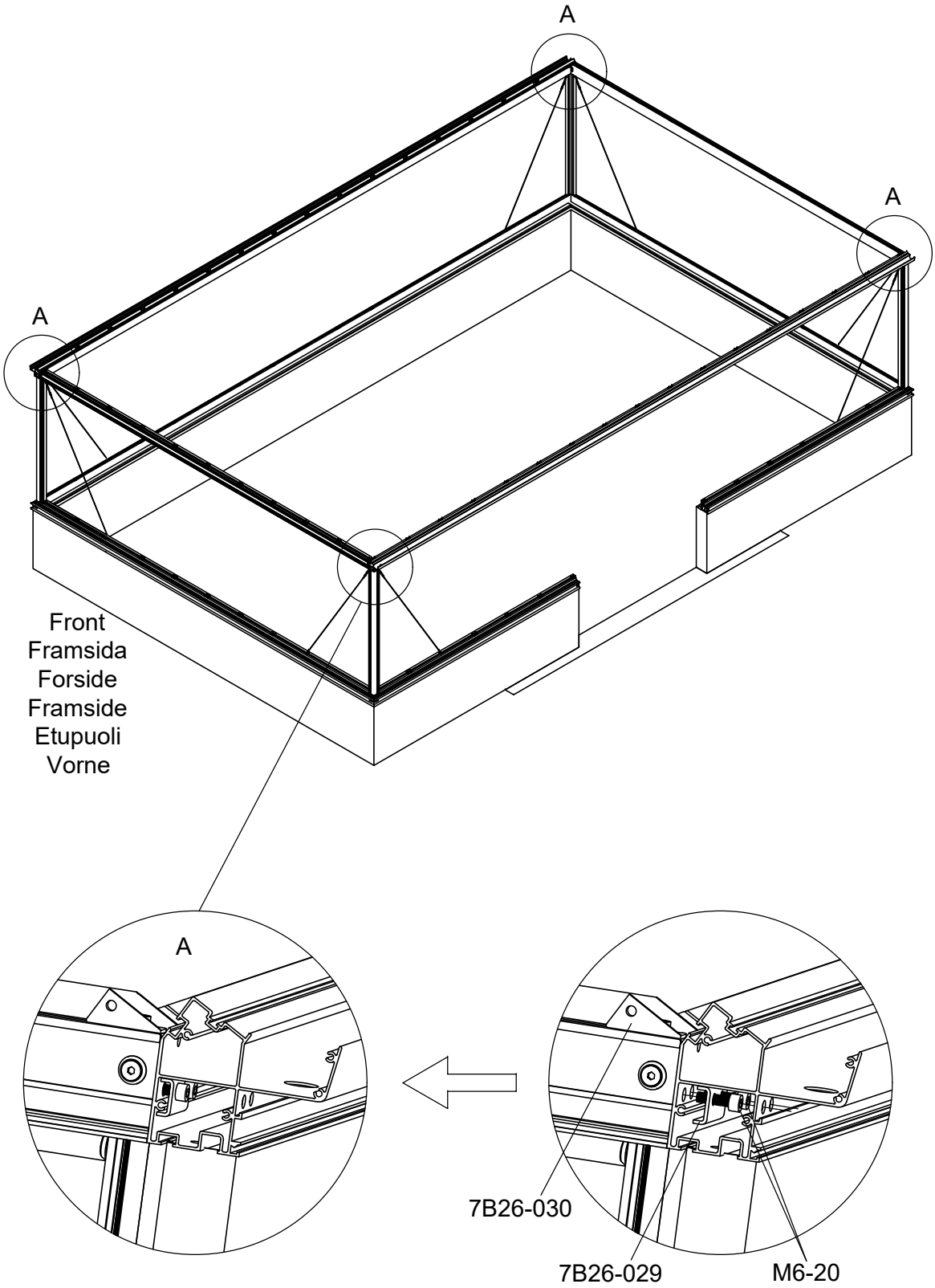

If you have chosen Side Windows, please assemble them from this step.
Please refer to the Side Window Instructions Page "7W1G-V3S 6/16 - 16/16".

Om du har valt sidofönster ska du montera dem från och med det här steget.
Se sidan med instruktioner för sidofönster "7W1G-V3S 6/16 - 16/16".

Hvis du har valgt sidevinduer, skal du montere dem fra dette trin og fremefter.
Se side 7W1G-V3S 6/16 - 16/16 i vejledningen til sidevinduer.

Hvis du har valgt Sidevinduer, vennligst sett dem sammen fra dette trinnet.
Vennligst se sidevindusinstruksjonene "7W1G-V3S 6/16 - 16/16".

Jos olet valinnut sivuikkunat, kokoa ne tästä vaiheesta alkaen.
Katso sivuikkunoiden ohjeet sivulta "7W1G-V3S 6/16 - 16/16".

Wenn Sie sich für Seitenfenster entschieden haben, montieren Sie diese bitte ab diesem Schritt.
Bitte beachten Sie die Anleitung für die Seitenfenster auf der Seite "7W1G-V3S 6/16 - 16/16".

Green Room®
BY WILLAB GARDEN

## SH7W1G-V3S

If the Side Window is assembled on a new greenroom, please start with Page 6/16.
If the Side Window is added to an existing greenroom, please start with Page 1/16.

Vid montage på ett nytt Green Room, börja på sidan 6/16.
Vid eftermontage på ett befintligt Green Room börjar du på sidan 1/16.

Hvis sidevinduet monteres på et nyt Green Room, skal du starte på side 6/16.
Ved eftermontering på et eksisterende Green Room, skal du starte på side 1/16.

Hvis sidevinduet er montert på et nytt Green Room, start på side 6/16.
Ved ettermontering til et eksisterende Green Room, start på side 1/16.

Jos sivuikkuna asennetaan uuteen Green Room, aloita sivulta 6/16.
Jos sivuikkuna lisätään olemassa olevaan Green Room, aloita sivulta 1/16.

Wenn das Seitenfenster in einem neuen Green Room, montiert wird, beginnen Sie bitte mit Seite 6/16.
Wenn das Seitenfenster in einen bestehenden Green Room, eingebaut wird, beginnen Sie bitte mit Seite 1/16.

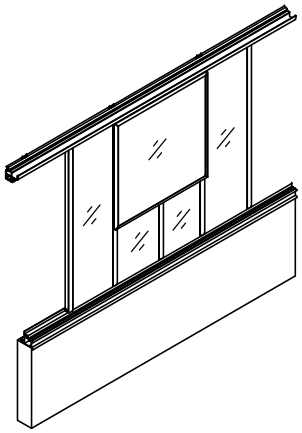

| Part | NO. | QTY. | Length(MM) |
|---|---|---|---|
| | 40A-Y30 | 8 | 1235 |
| | Si6-16 | 16 | PCS |
| | J05 | 16 | PCS |

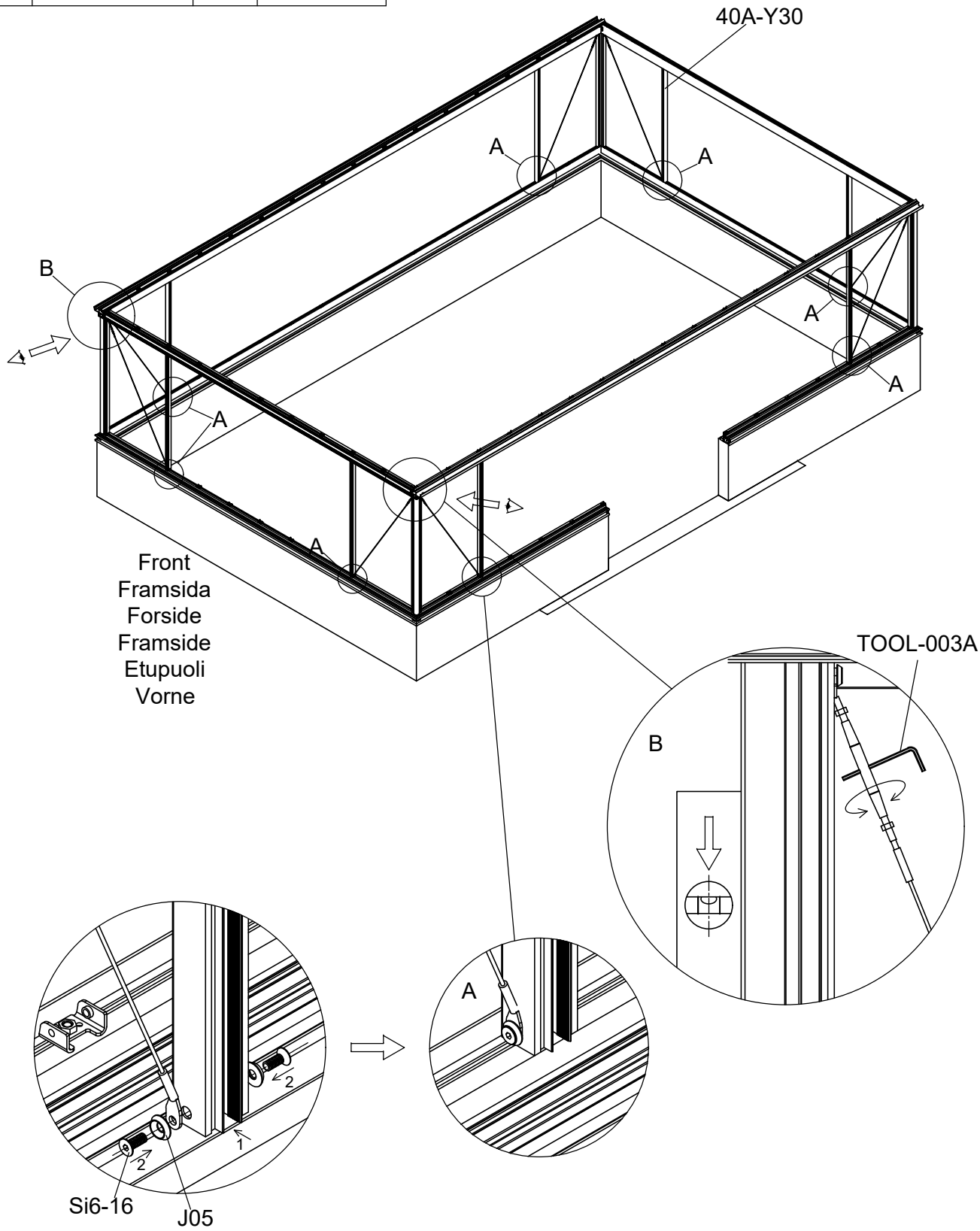

| Part | NO. | QTY. | | | | | | | | | | | | Length (MM) |
|---|---|---|---|---|---|---|---|---|---|---|---|---|---|---|
| | | 3054 | | | 3055 | | | 3056 | | | 3057 | | | |
| | | 3054 | 3149P -S | 3149P -S-2 | 3055 | 3149P -S | 3149P -S-2 | 3056 | 3149P -S | 3149P -S-2 | 3057 | 3149P -S | 3149P -S-2 | |
| | 40A-Y30 | 8 | 15 | 2 | 10 | 17 | 2 | 12 | 17 | 4 | 14 | 17 | 6 | 1235 |
| | Si6-16 | 40 | 60 | 8 | 48 | 68 | 8 | 56 | 68 | 16 | 64 | 68 | 24 | PCS |
| | J05 | 40 | 60 | 8 | 48 | 68 | 8 | 56 | 68 | 16 | 64 | 68 | 24 | PCS |

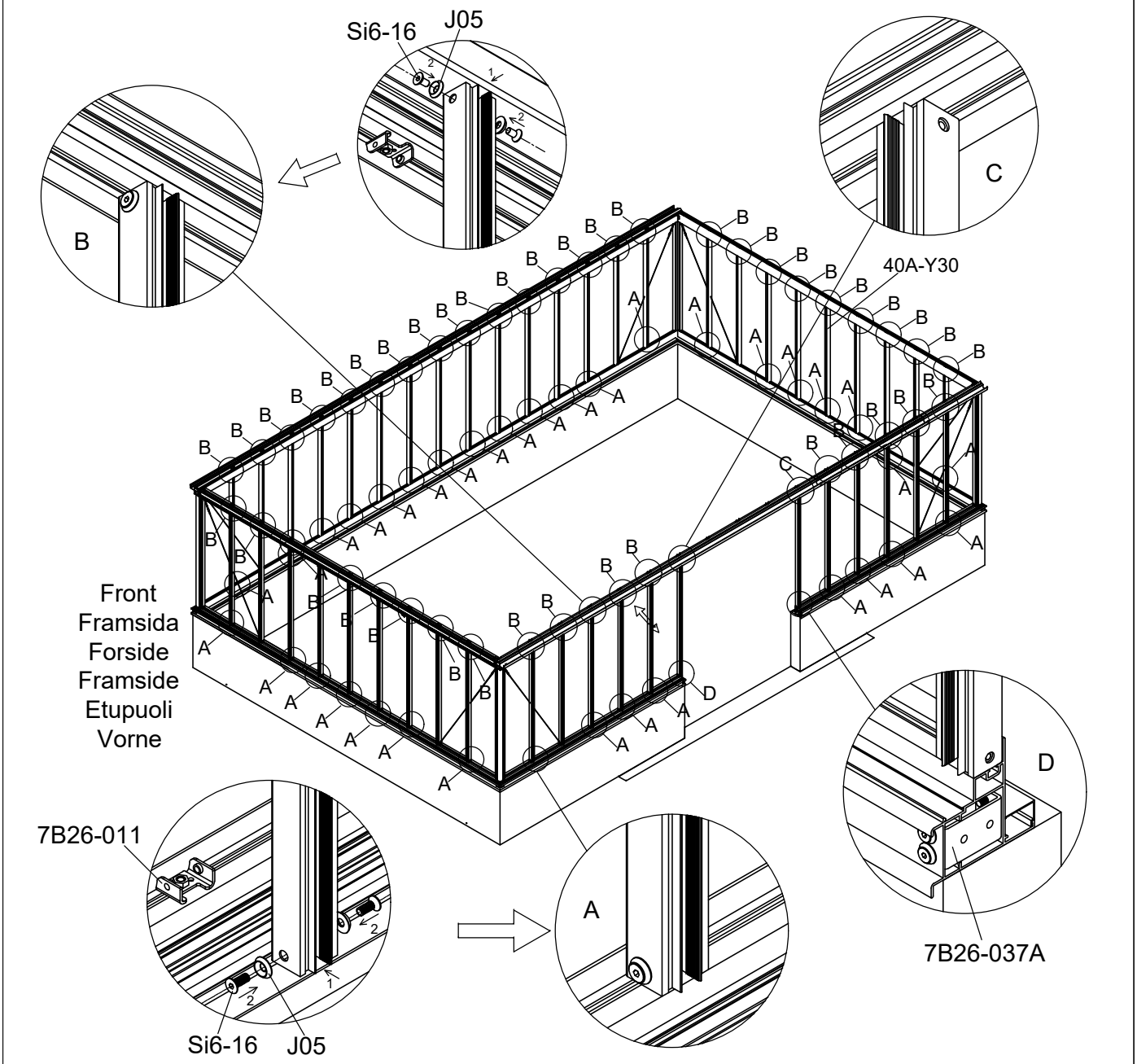


| 3054 | 3055 | 3056 | 3057 |
|---|---|---|---|
| 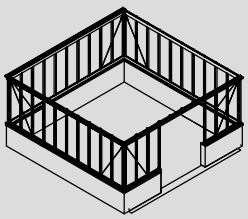 | 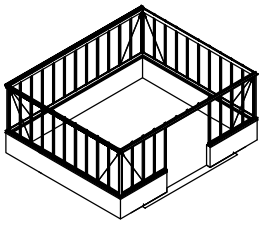 | 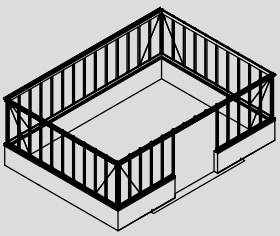 | 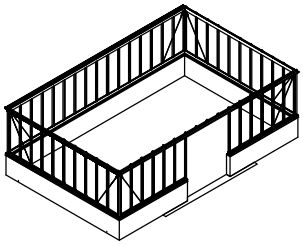 |

| Part | NO. | QTY. | Length(MM) |
|---|---|---|---|
| | 50X-Y31R | 2 | 633 |
| | 50X-Y31L | 2 | 633 |
| | 50X-Y32 | 2 | 1075 |
| | Si6-16 | 12 | PCS |
| | J05 | 12 | PCS |

| Part | NO. | QTY. | Length(MM) | CTN NO. |
|---|---|---|---|---|
| | 50X-Y31A-R | 2 | 851 | 3149P-S |
| | 50X-Y31A-L | 2 | 851 | 3149P-S |
| | 40X-Y31R | 2 | 418 | 3149P-S |
| | 40X-Y31L | 2 | 418 | 3149P-S |
| | 40X-Y31A-R | 2 | 201 | 3149P-S |
| | 40X-Y31A-L | 2 | 201 | 3149P-S |
| | Si6-16 | 24 | PCS | 3149P-S |
| | J05 | 24 | PCS | 3149P-S |

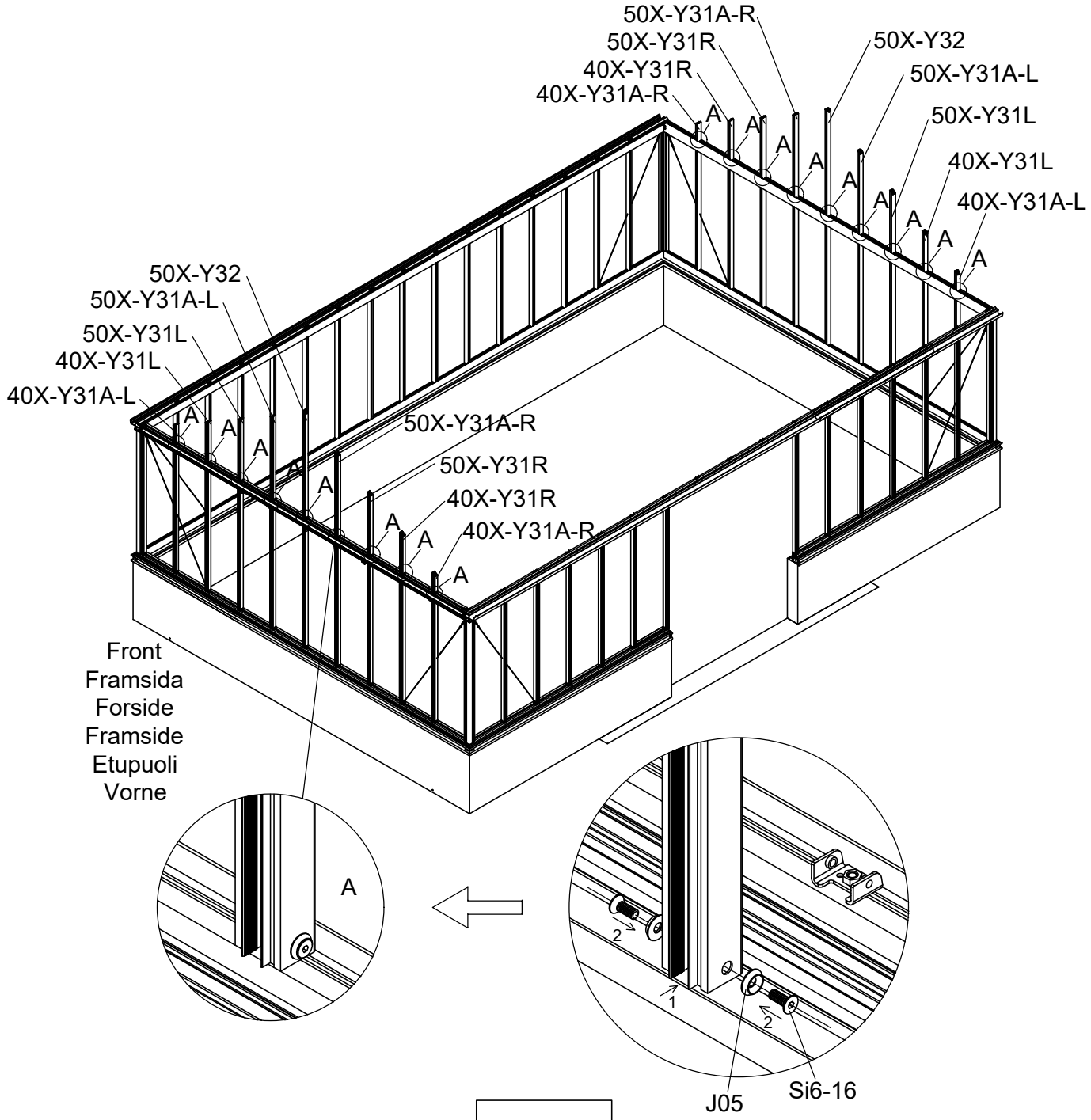

| Part | Product | NO. | Length (MM) | QTY. | Code |
|---|---|---|---|---|---|
| | 3054 | 40X-Y63-5 | 3869 | 1 | A005 |
| | 3055 | 40X-Y63-6 | 4620 | | |
| | 3056 | 40X-Y63-7 | 5371 | | |
| | 3057 | 40X-Y63-8 | 6122 | | |

| Part | NO. | QTY. | | | | | | | | Length (MM) |
|---|---|---|---|---|---|---|---|---|---|---|
| | | 3054 | | 3055 | | 3056 | | 3057 | | |
| | | 3149P -S | 3149P -S-2 | 3149P -S | 3149P -S-2 | 3149P -S | 3149P -S-2 | 3149P -S | 3149P -S-2 | |
| | 7B26-011 | 6 | 0 | 6 | 2 | 6 | 2 | 6 | 4 | PCS |
| | Ma6-12 | 6 | 0 | 6 | 2 | 6 | 2 | 6 | 4 | PCS |
| | M6 | 6 | 0 | 6 | 2 | 6 | 2 | 6 | 4 | PCS |

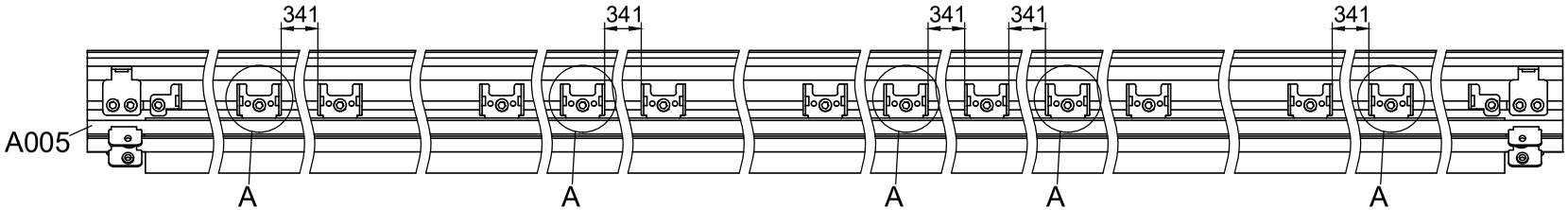


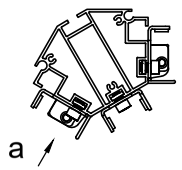


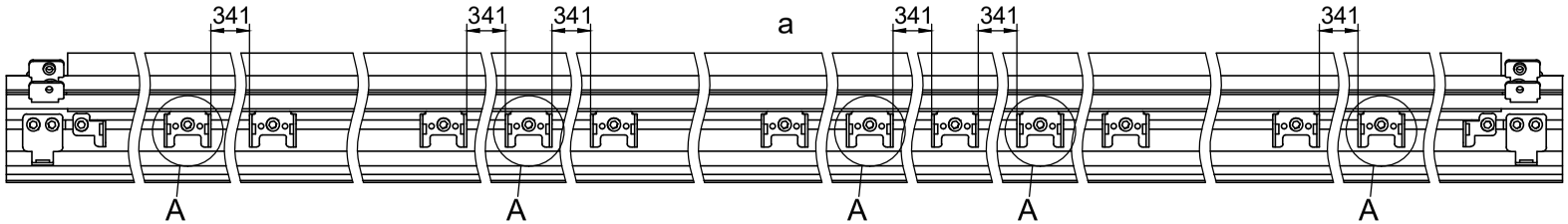


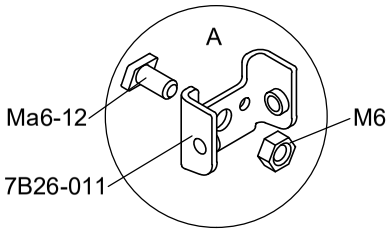

| Part | NO. | QTY. | Length(MM) |
|---|---|---|---|
| | M6-8 | 4 | PCS |

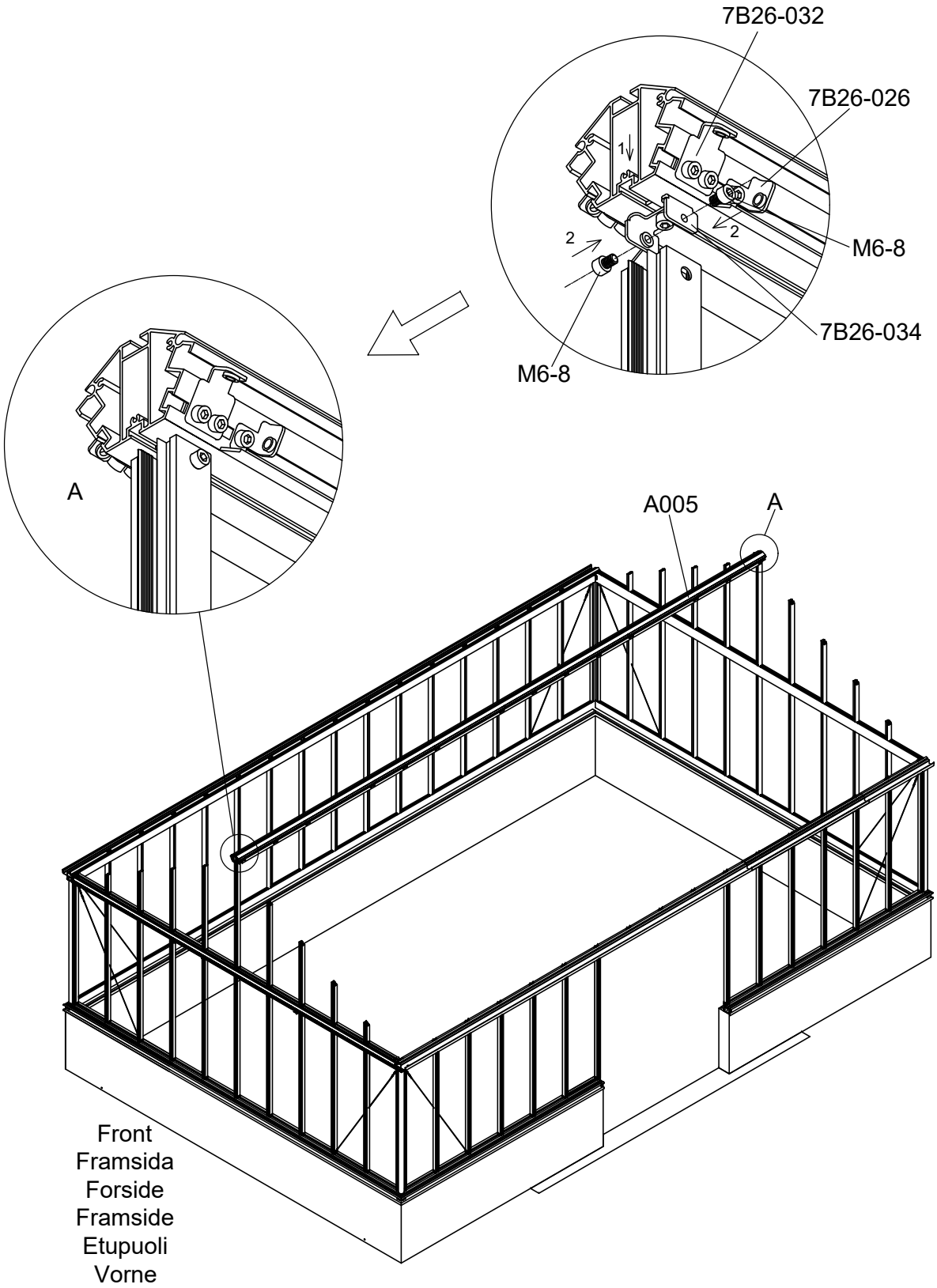

| Part | NO. | QTY. | | | | Length (MM) | Code |
|---|---|---|---|---|---|---|---|
| | | 3054 | 3055 | 3056 | 3057 | | |
| | L04 | 4 | 4 | 0 | 0 | 2580 | A019 |
| | L25 | 0 | 0 | 4 | 4 | 3073 | |

| Part | NO. | QTY. | Length(MM) | CTN NO. |
|---|---|---|---|---|
| | 50X-Y21 | 2 | 2189 | |
| | 50X-Y22 | 2 | 2189 | |
| | Si6-16 | 8 | PCS | |
| | J05 | 8 | PCS | |
| | L04 | 4 | 2580 | |
| | S6-10 | 16 | PCS | |
| | 7B26-033 | 4 | PCS | |
| | S6-10 | 32 | PCS | 3149P-S |

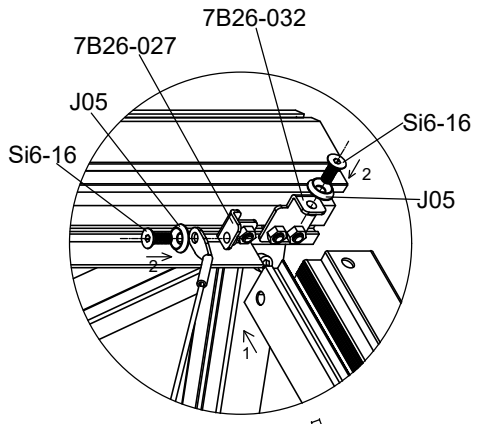


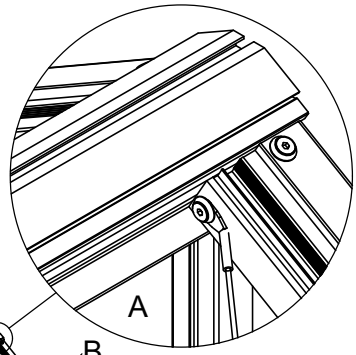





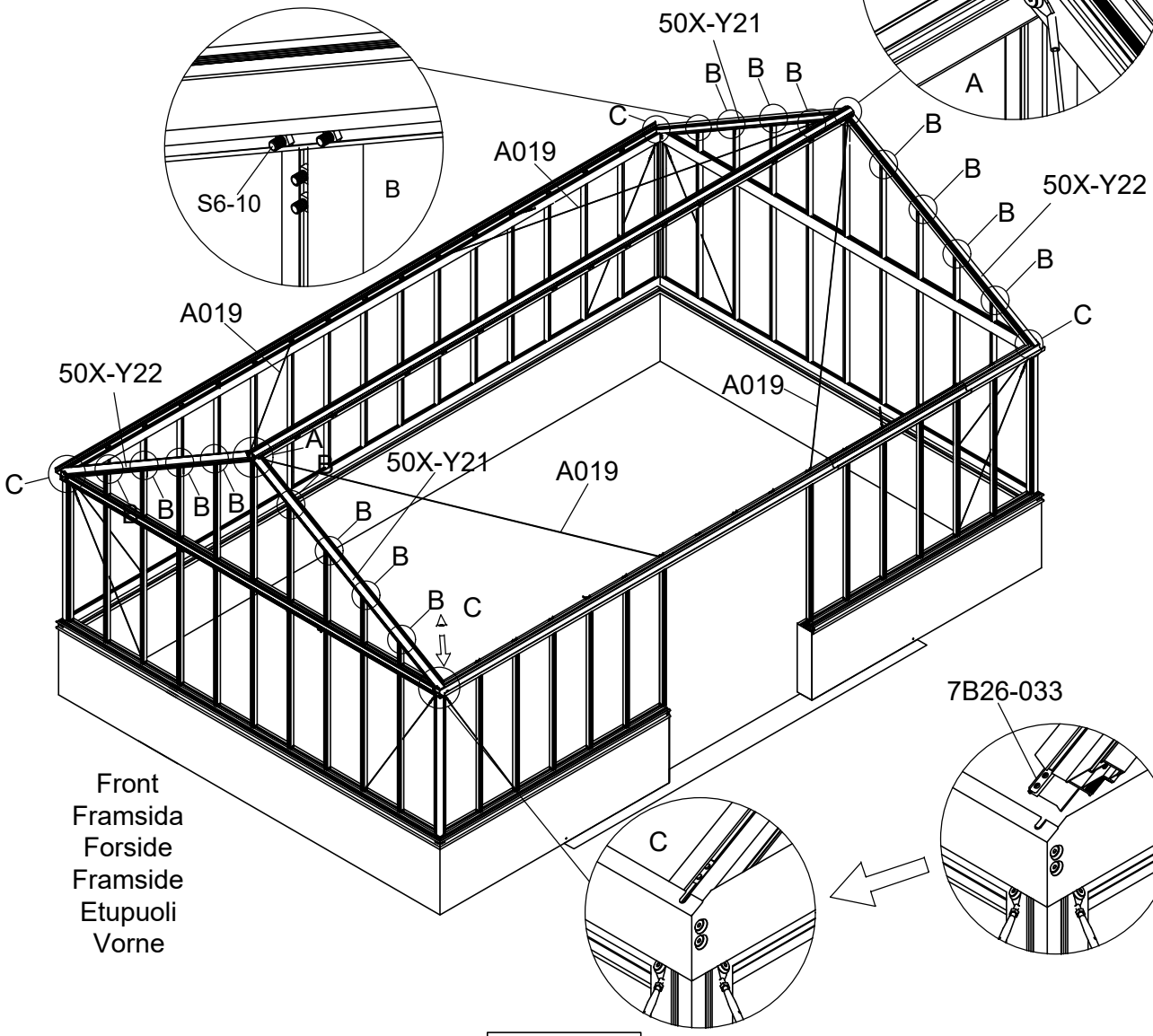

| Part | NO. | QTY. | Length(MM) |
|---|---|---|---|
| | 7B26-005 | 4 | PCS |
| | Mi6 | 16 | PCS |
| | J05 | 4 | PCS |
| | Si6-12 | 4 | PCS |
| | M6-8 | 4 | PCS |

| Part | NO. | QTY. | Length(MM) | CTN NO. |
|---|---|---|---|---|
| | 7B26-005 | 12 | PCS | 3149P-S |
| | Mi6 | 48 | PCS | 3149P-S |

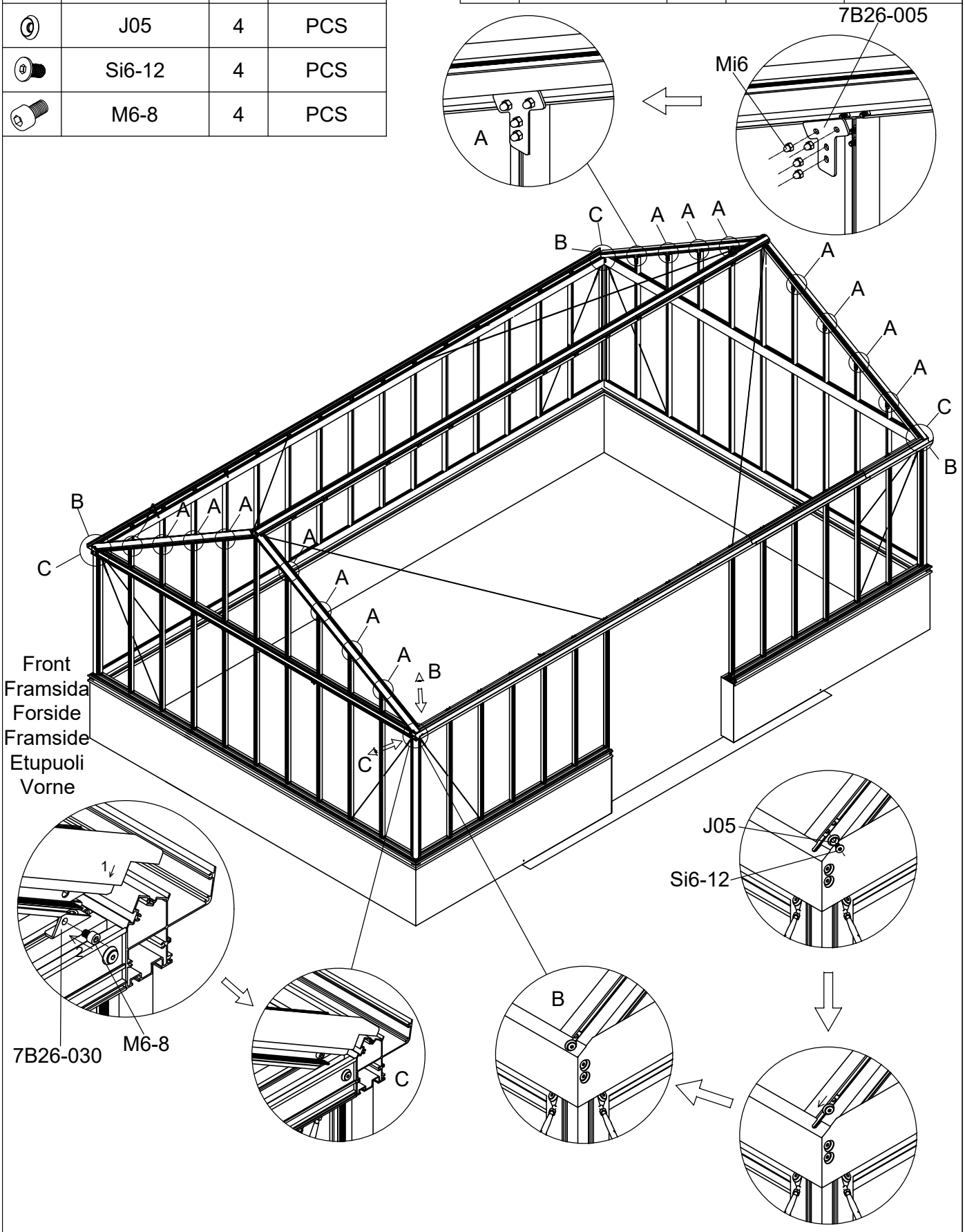

| Part | NO. | QTY. | | | | | | Length (MM) | Code |
|---|---|---|---|---|---|---|---|---|---|
| | | 3054 | | | 3055 | | | | |
| | | 3054 | 3149P-S | 3149P-S-2 | 3055 | 3149P-S | 3149P-S-2 | | |
| | 50X-Y33R | 4 | 0 | 0 | 4 | 0 | 0 | 2150 | A015 |
| | 50X-Y33L | 4 | 0 | 0 | 4 | 0 | 0 | 2150 | A016 |
| | Si5-16 | 16 | 8 | 0 | 16 | 8 | 0 | PCS | |
| | J01 | 16 | 8 | 0 | 16 | 8 | 0 | PCS | |
| | 40X-Y34C | 0 | 4 | 0 | 0 | 4 | 0 | 713 | |
| | 50X-Y33-C | 0 | 4 | 0 | 0 | 4 | 0 | 1273 | |

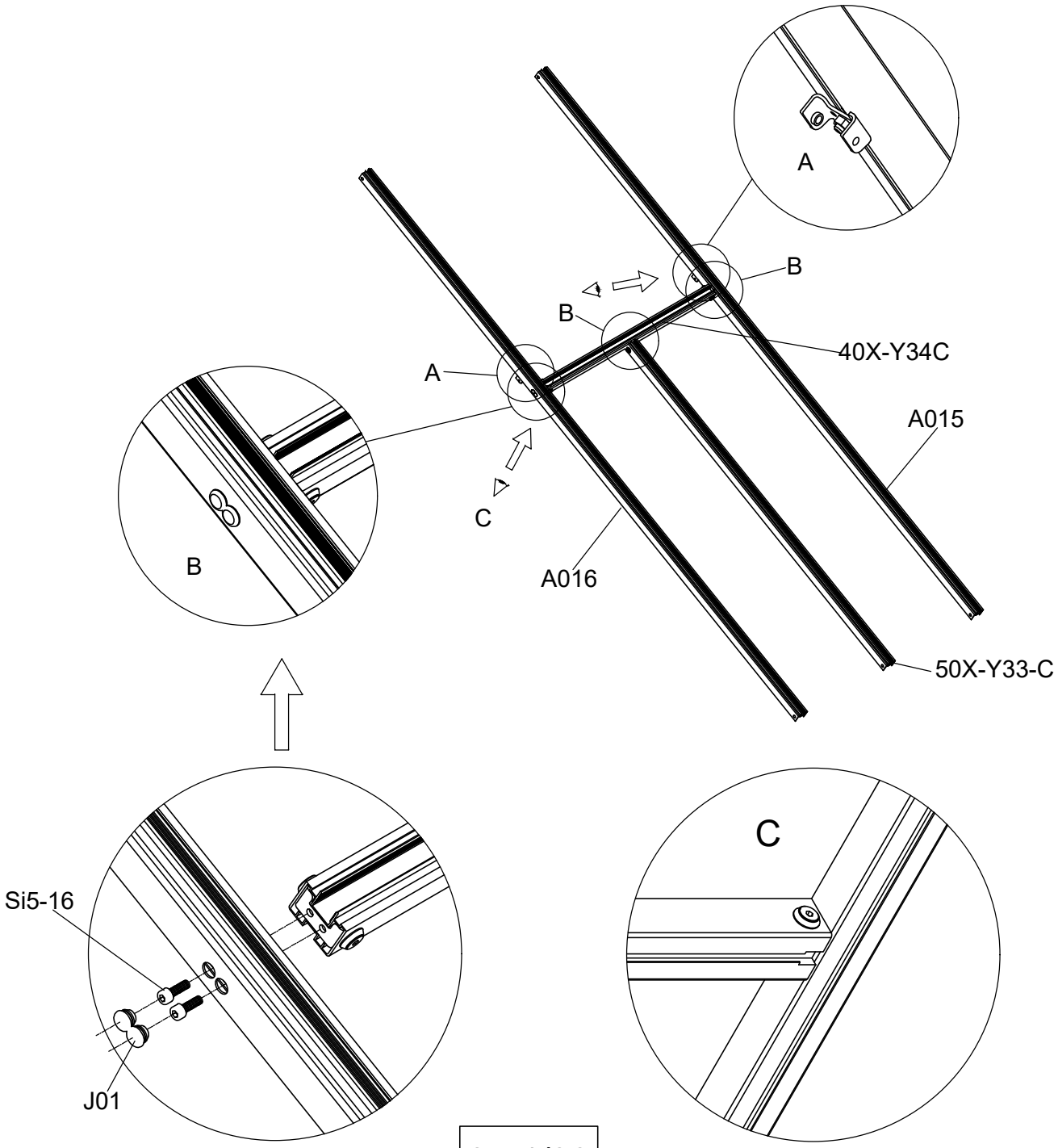

| Part | NO. | QTY. | | | | | | Length (MM) | Code |
|---|---|---|---|---|---|---|---|---|---|
| | | 3056 | | | 3057 | | | | |
| | | 3056 | 3149P-S | 3149P-S-2 | 3057 | 3149P-S | 3149P-S-2 | | |
| | 50X-Y33HR | 6 | 0 | 0 | 6 | 0 | 0 | 2150 | A015 |
| | 50X-Y33HL | 6 | 0 | 0 | 6 | 0 | 0 | 2150 | A016 |
| | Si5-16 | 24 | 8 | 4 | 24 | 8 | 4 | PCS | |
| | J01 | 24 | 8 | 4 | 24 | 8 | 4 | PCS | |
| | 40X-Y34C | 0 | 4 | 2 | 0 | 4 | 2 | 713 | |
| | 50X-Y33-C | 0 | 4 | 2 | 0 | 4 | 2 | 1273 | |

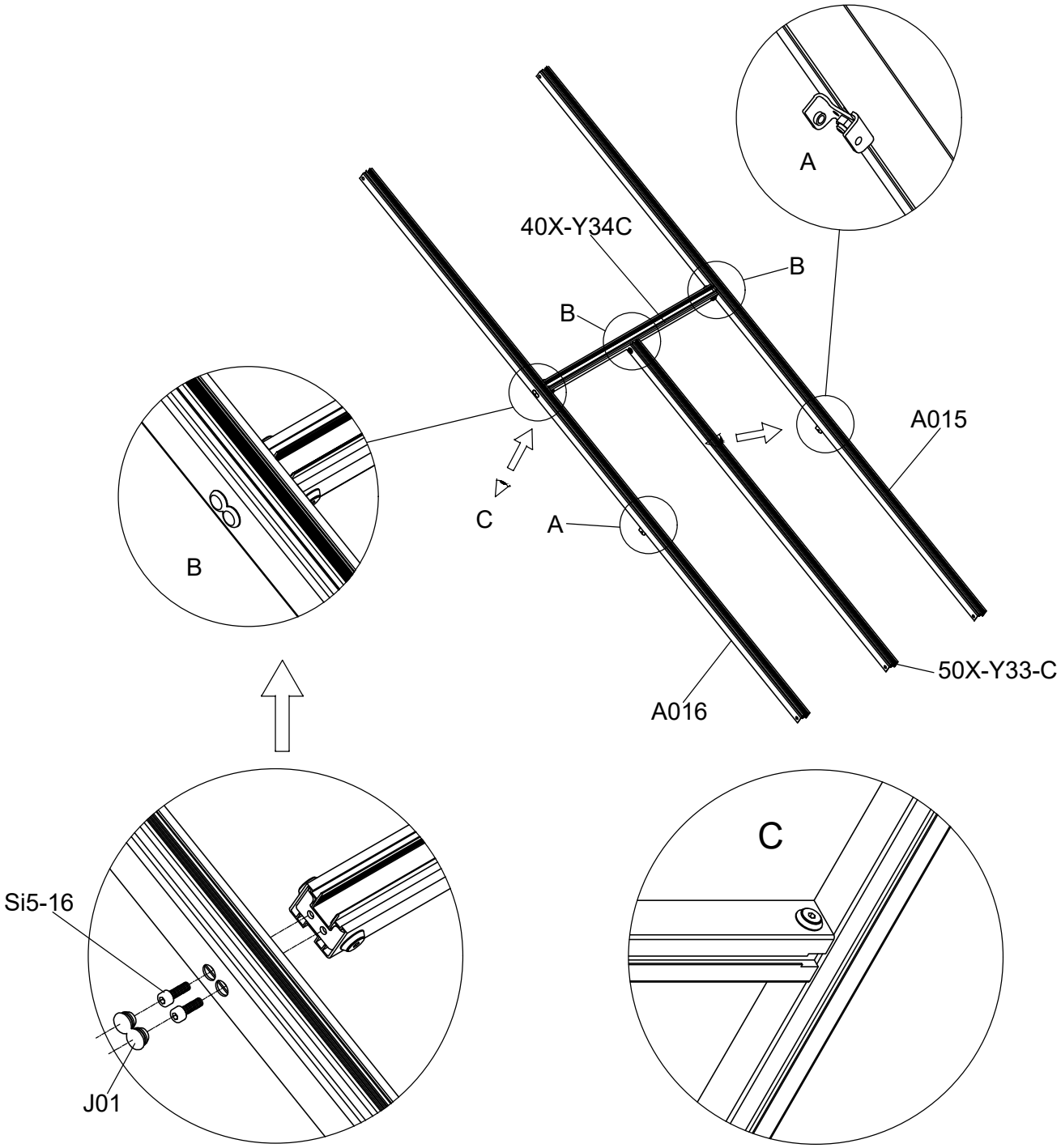

| Part | NO. | QTY. | | | | | | | | | | | | Length (MM) | Code |
|---|---|---|---|---|---|---|---|---|---|---|---|---|---|---|---|
| | | 3054 | | | 3055 | | | 3056 | | | 3057 | | | | |
| | | 3054 | 3149P -S | 3149P -S-2 | 3055 | 3149P -S | 3149P -S-2 | 3056 | 3149P -S | 3149P -S-2 | 3057 | 3149P -S | 3149P -S-2 | | |
| | 50X-Y33-A | 0 | 0 | 0 | 2 | 0 | 0 | 0 | 0 | 0 | 0 | 0 | 0 | 2190 | A017 |
| | 50X-Y33H-A | 0 | 0 | 0 | 0 | 0 | 0 | 0 | 0 | 0 | 2 | 0 | 0 | 2190 | |
| | 50X-Y33-B | 0 | 6 | 0 | 0 | 6 | 2 | 0 | 6 | 2 | 0 | 6 | 4 | 2150 | |

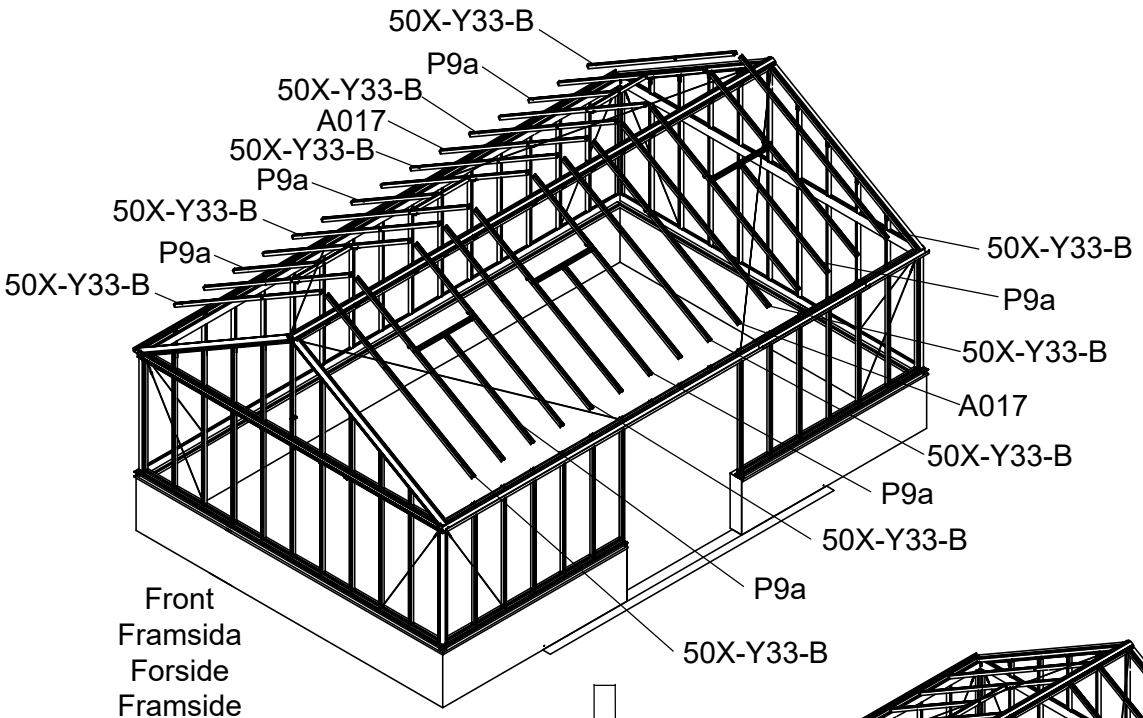


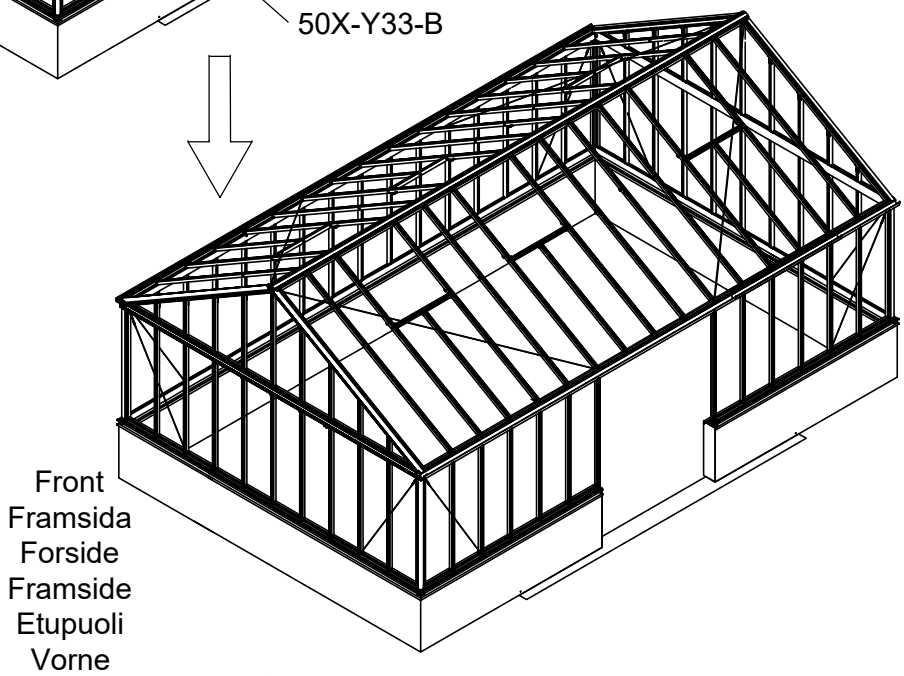


| 3054 | 3055 | 3056 | 3057 |
|---|---|---|---|
| 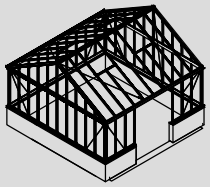 | 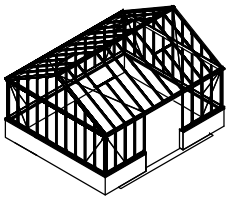 | 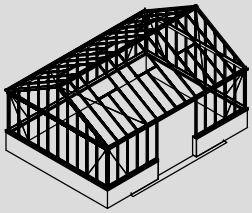 | 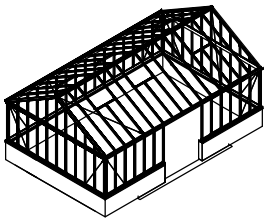 |

| Part | NO. | QTY. | | | | | | | | | | | | Length (MM) |
|---|---|---|---|---|---|---|---|---|---|---|---|---|---|---|
| | | 3054 | | | 3055 | | | 3056 | | | 3057 | | | |
| | | 3054 | 3149P -S | 3149P -S-2 | 3055 | 3149P -S | 3149P -S-2 | 3056 | 3149P -S | 3149P -S-2 | 3057 | 3149P -S | 3149P -S-2 | |
| | Si6-16 | 32 | 32 | 0 | 40 | 32 | 8 | 48 | 32 | 12 | 56 | 32 | 20 | PCS |
| | J05 | 32 | 32 | 0 | 40 | 32 | 8 | 48 | 32 | 12 | 56 | 32 | 20 | PCS |

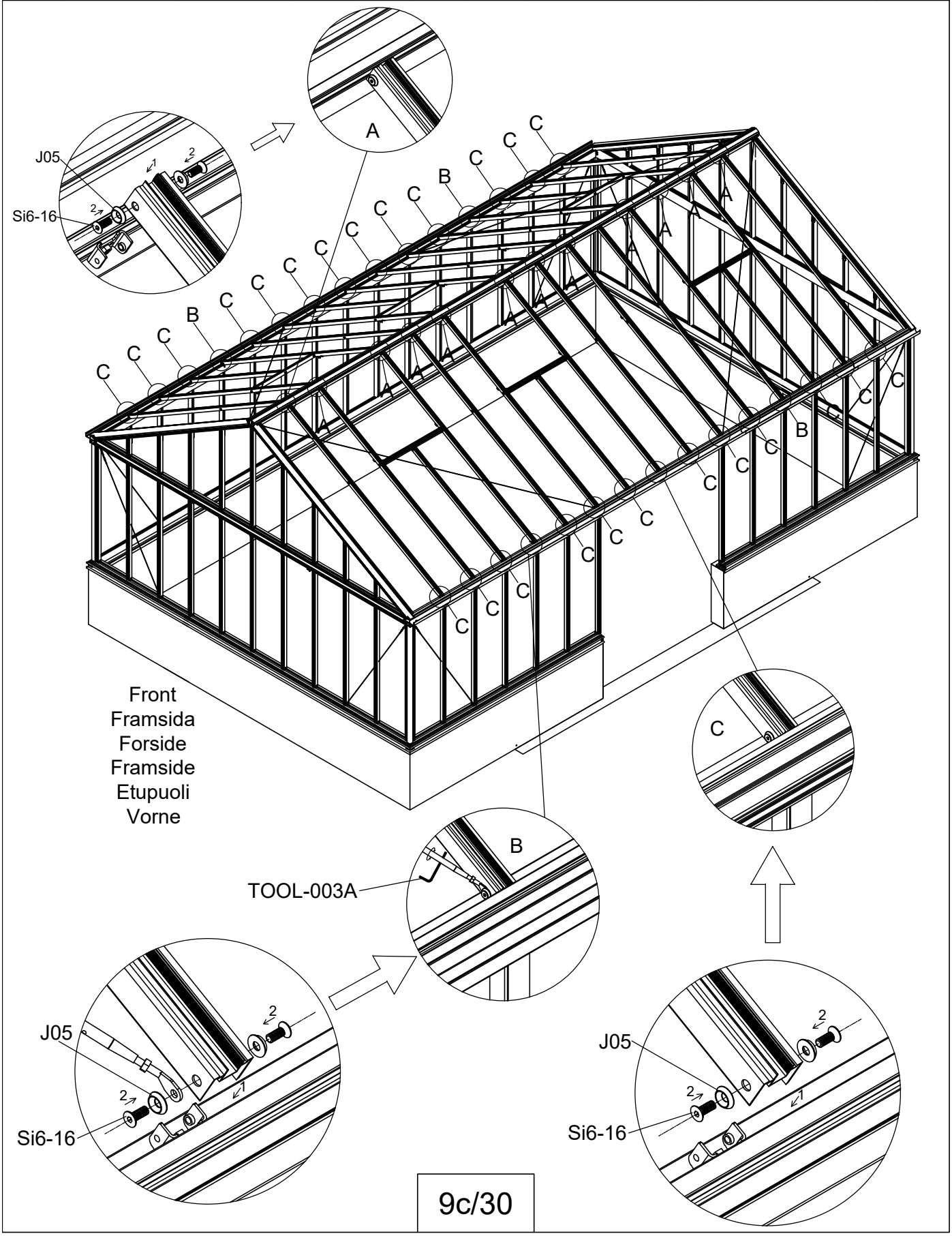

| Part | NO. | QTY. | | Length(MM) |
|---|---|---|---|---|
| | | 3054 | 3055 | |
| | 50X-Y35 | 4 | 5 | 1500 |
| | Si6-16 | 16 | 20 | PCS |
| | J05 | 16 | 20 | PCS |

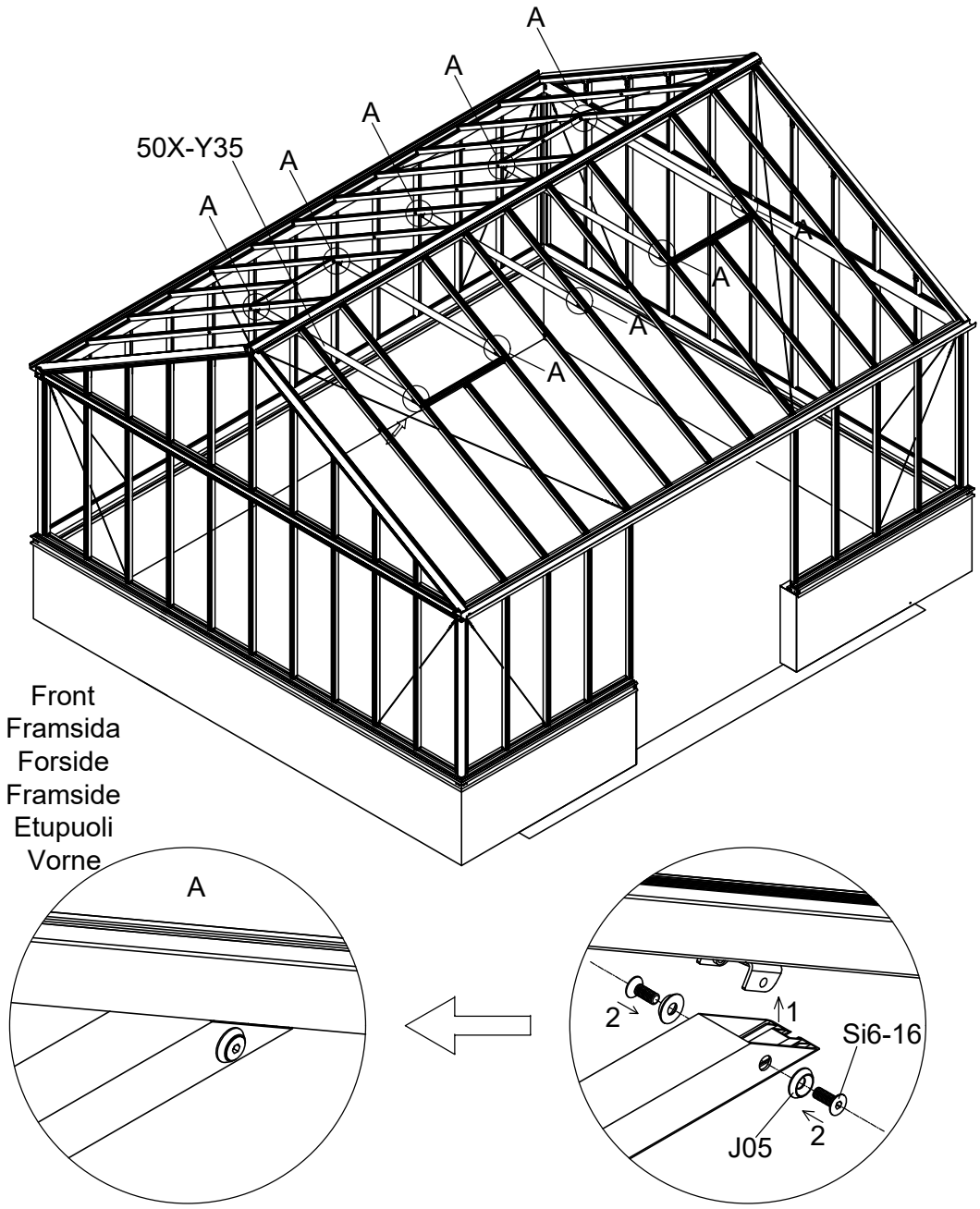


| 3054 | 3055 |
|---|---|
| 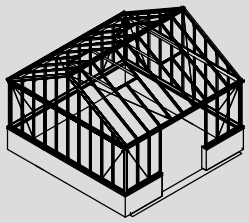 | 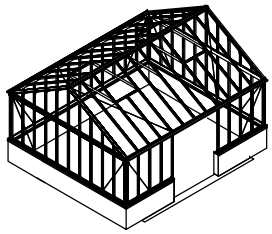 |

| Part | NO. | QTY. | | Length(MM) |
|---|---|---|---|---|
| | | 3056 | 3057 | |
| | 50X-Y35-2460 | 6 | 7 | 2460 |
| | Si6-16 | 24 | 28 | PCS |
| | J05 | 24 | 28 | PCS |

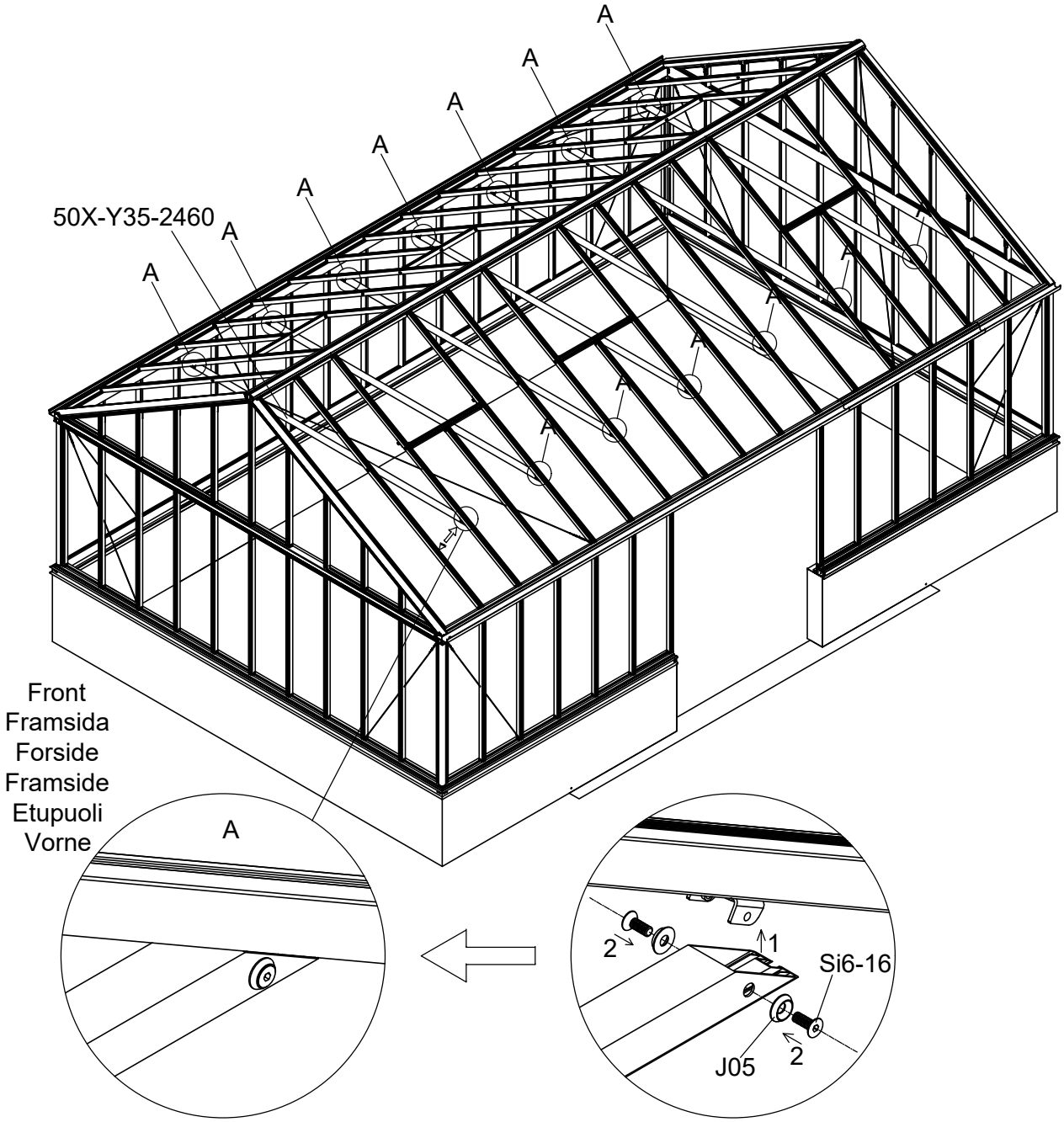


| 3056 | 3057 |
|---|---|
| 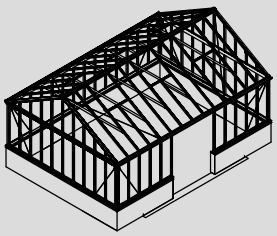 | 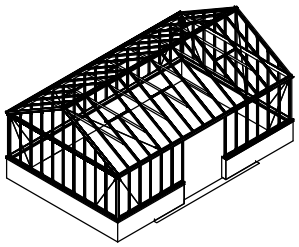 |

| Part | NO. | QTY. | | | | Length(MM) |
|---|---|---|---|---|---|---|
| | | 3054 | 3055 | 3056 | 3057 | |
| | 354×1262 | 16 | 18 | 20 | 22 | 1262 |

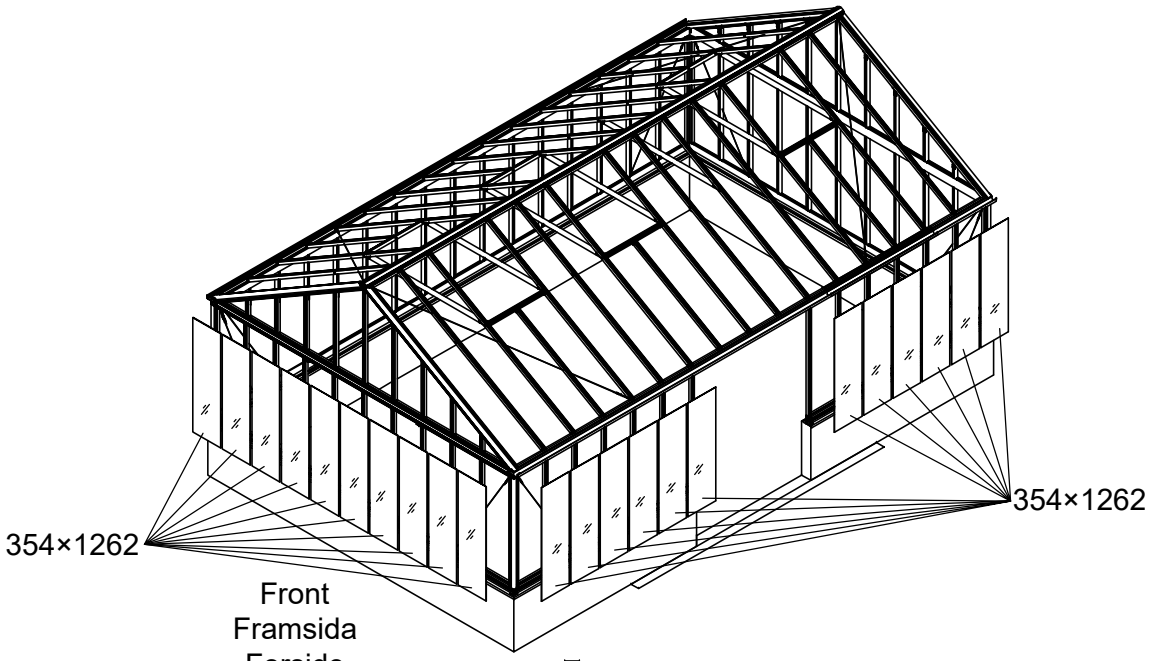


Front
Framsida
Forside
Framside
Etupuoli
Vorne

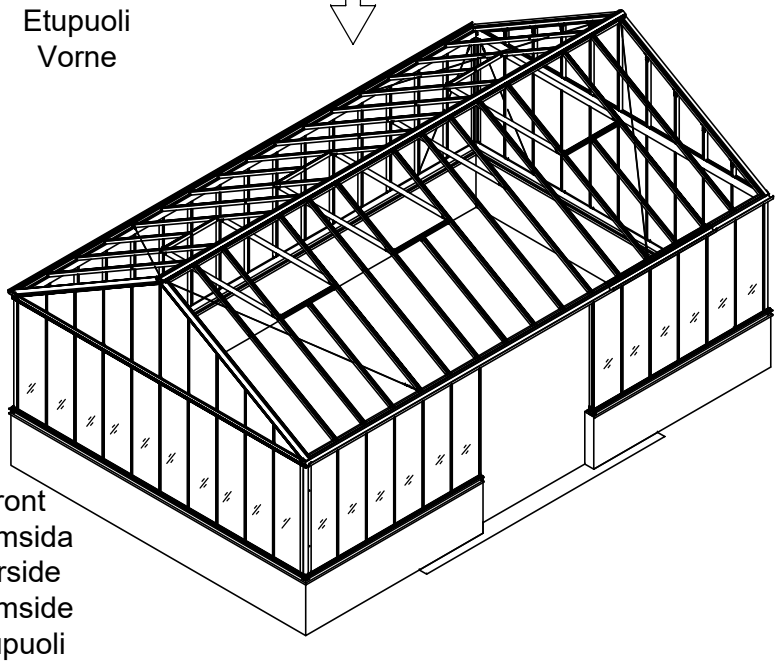

Front
Framsida
Forside
Framside
Etupuoli
Vorne

| 3054 | 3055 | 3056 | 3057 |
|---|---|---|---|
| 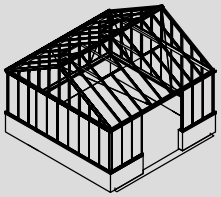 | 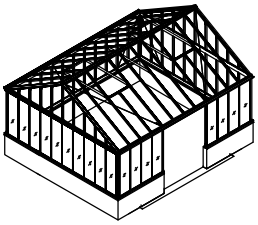 | 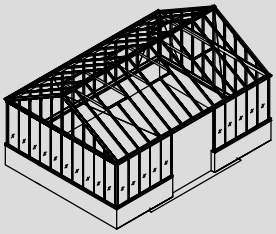 | 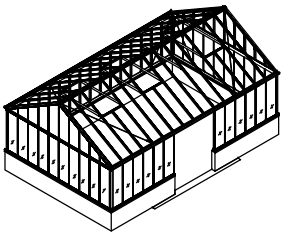 |

| Part | NO. | QTY. | | | | Length(MM) |
|---|---|---|---|---|---|---|
| | | 3054 | 3055 | 3056 | 3057 | |
| | 354×1262 | 20 | 22 | 24 | 26 | 1262 |

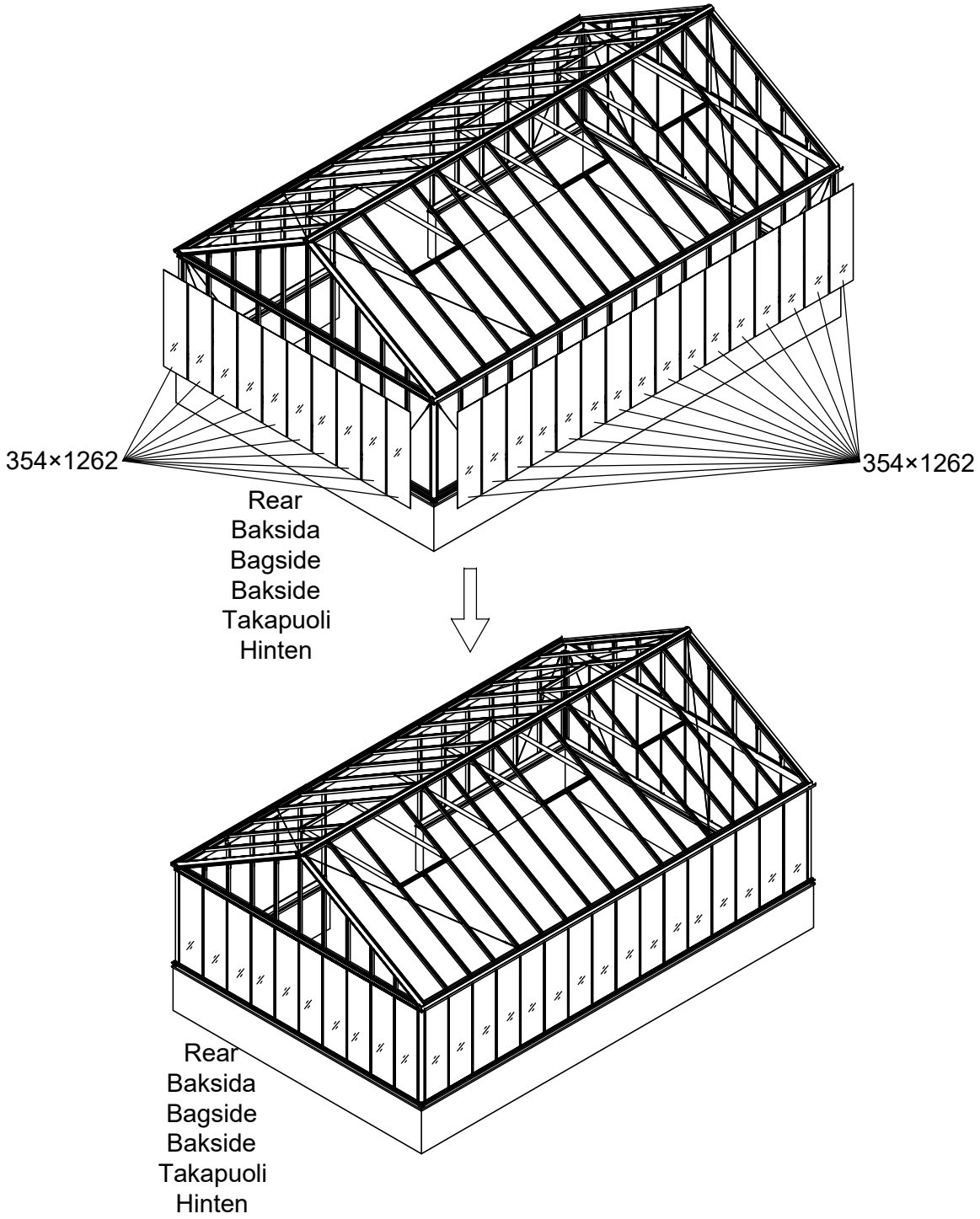


| 3054 | 3055 | 3056 | 3057 |
|---|---|---|---|
| 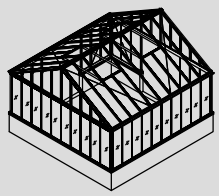 | 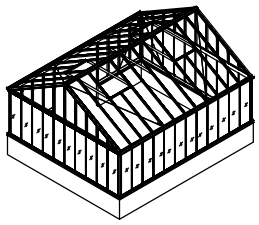 | 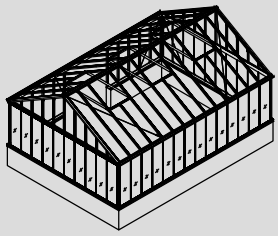 | 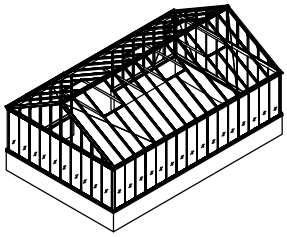 |

| Part | Product | NO. | Length (MM) | QTY. | CTN NO. | Code |
|---|---|---|---|---|---|---|
| | 3054 | 40X-Y15-5 | 3900 | 1 | 3043P-S-BASE5 | A006 |
| | 3055 | 40X-Y15-6 | 4651 | 1 | 3043P-S-BASE6 | |
| | 3056 | 40X-Y15-7 | 5402 | 1 | 3043P-S-BASE7 | |
| | 3057 | 40X-Y15-8 | 6153 | 1 | 3043P-S-BASE8 | |
| | 3054 | 50A-Y15-R | 1218 | 1 | 3043PA-S-5 | A012 |
| | 3055 | 40A-S15-6R | 1593 | 1 | 3043PA-S-6 | |
| | 3056 | 40A-S15-7R | 1969 | 1 | 3043PA-S-7 | |
| | 3057 | 40A-S15-8R | 2344 | 1 | 3043PA-S-8 | |
| | 3054 | 50A-Y15-L | 1218 | 1 | 3043PA-S-5 | A013 |
| | 3055 | 40A-S15-6L | 1593 | 1 | 3043PA-S-6 | |
| | 3056 | 40A-S15-7L | 1969 | 1 | 3043PA-S-7 | |
| | 3057 | 40A-S15-8L | 2344 | 1 | 3043PA-S-8 | |

| Part | NO. | QTY. | Length(MM) | CTN NO. |
|---|---|---|---|---|
| | 40X-Y15-5 | 2 | 3900 | 3043PA-S-5G |

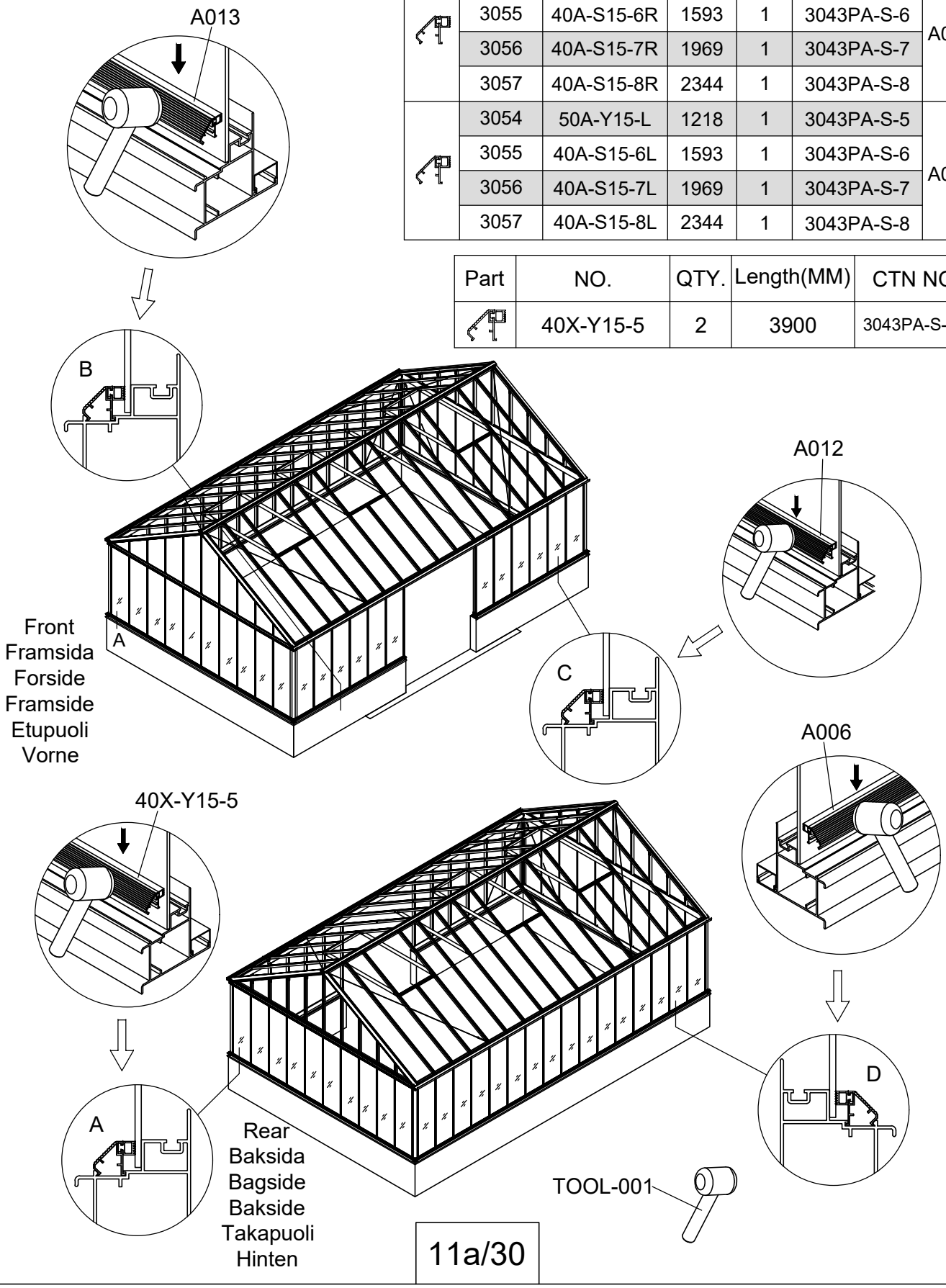

| Part | NO. | QTY. | | | | | | | | | | | | Length (MM) |
|---|---|---|---|---|---|---|---|---|---|---|---|---|---|---|
| | | 3054 | | | 3055 | | | 3056 | | | 3057 | | | |
| | | 3054 | 3149P -S | 3149P -S-2 | 3055 | 3149P -S | 3149P -S-2 | 3056 | 3149P -S | 3149P -S-2 | 3057 | 3149P -S | 3149P -S-2 | |
| | 40A-Y01 | 11 | 7 | 0 | 12 | 7 | 1 | 13 | 7 | 2 | 14 | 7 | 3 | 1235 |
| | 40A-Y02 | 1 | 0 | 0 | 1 | 0 | 0 | 1 | 0 | 0 | 1 | 0 | 0 | 1235 |

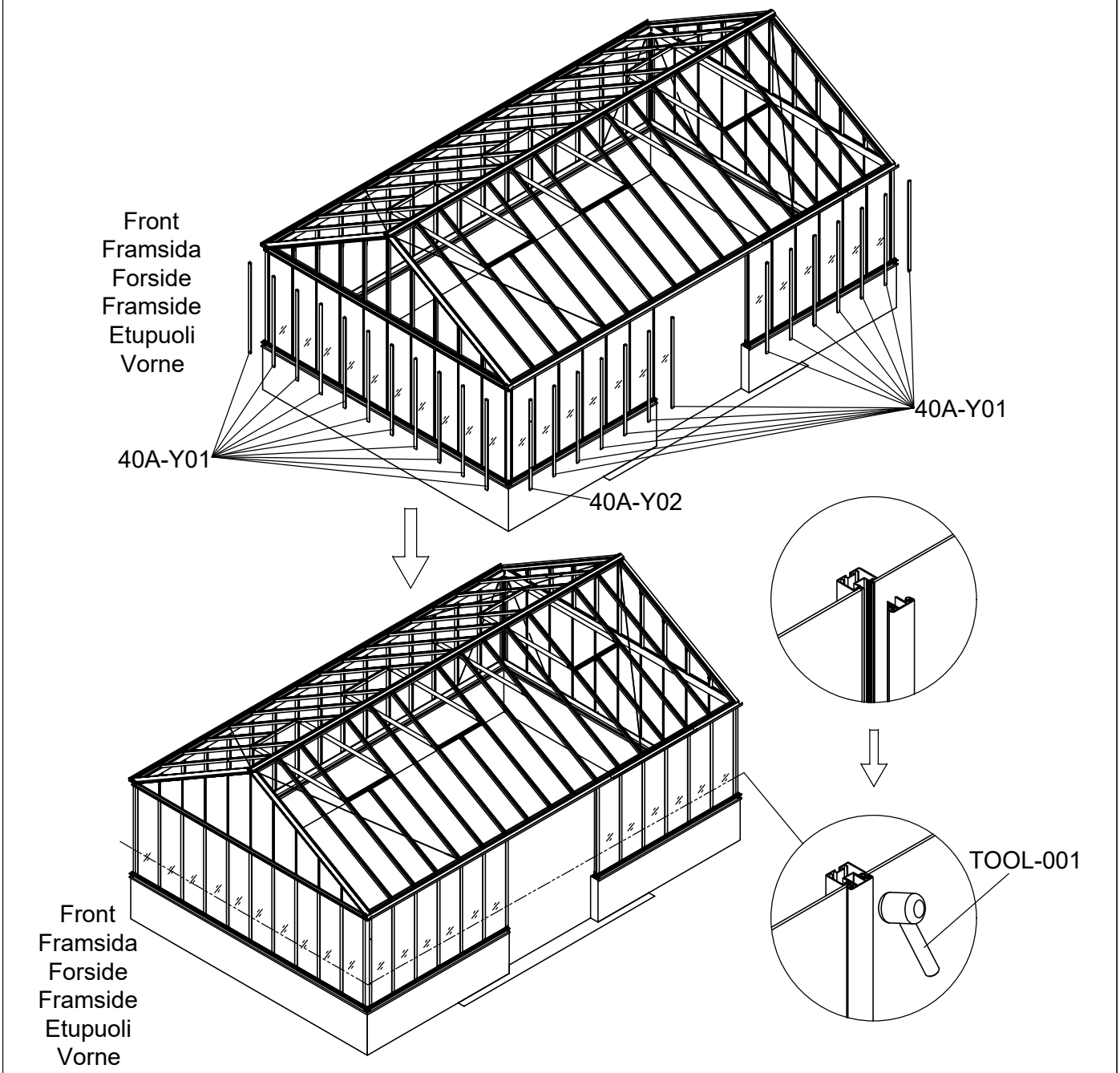


| 3054 | 3055 | 3056 | 3057 |
|---|---|---|---|
| 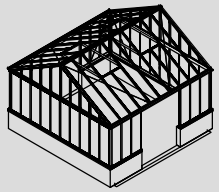 | 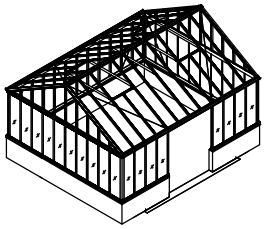 | 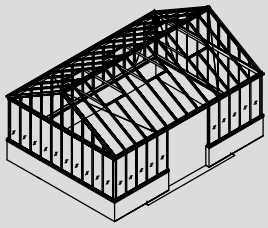 | 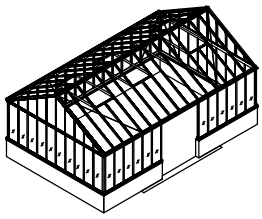 |

| Part | NO. | QTY. | | | | | | | | | | | | Length (MM) |
|---|---|---|---|---|---|---|---|---|---|---|---|---|---|---|
| | | 3054 | | | 3055 | | | 3056 | | | 3057 | | | |
| | | 3054 | 3149P -S | 3149P -S-2 | 3055 | 3149P -S | 3149P -S-2 | 3056 | 3149P -S | 3149P -S-2 | 3057 | 3149P -S | 3149P -S-2 | |
| | 40A-Y01 | 11 | 10 | 0 | 12 | 10 | 1 | 13 | 10 | 2 | 14 | 10 | 3 | 1235 |
| | 40A-Y02 | 1 | 0 | 0 | 1 | 0 | 0 | 1 | 0 | 0 | 1 | 0 | 0 | 1235 |

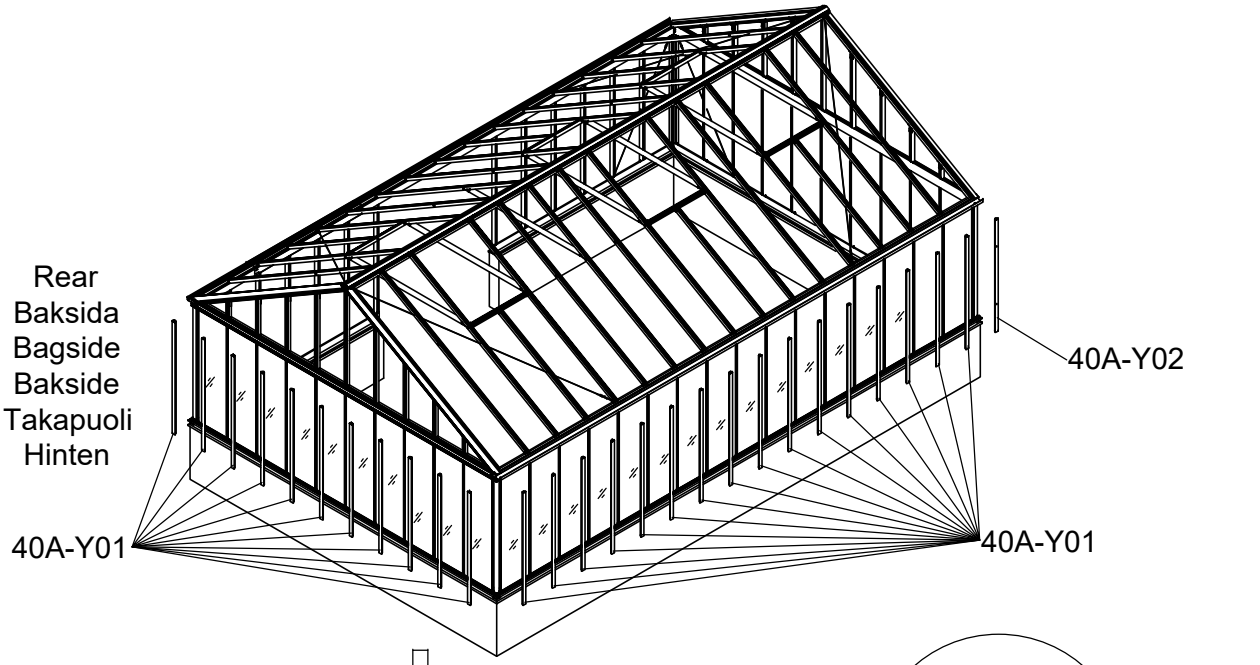


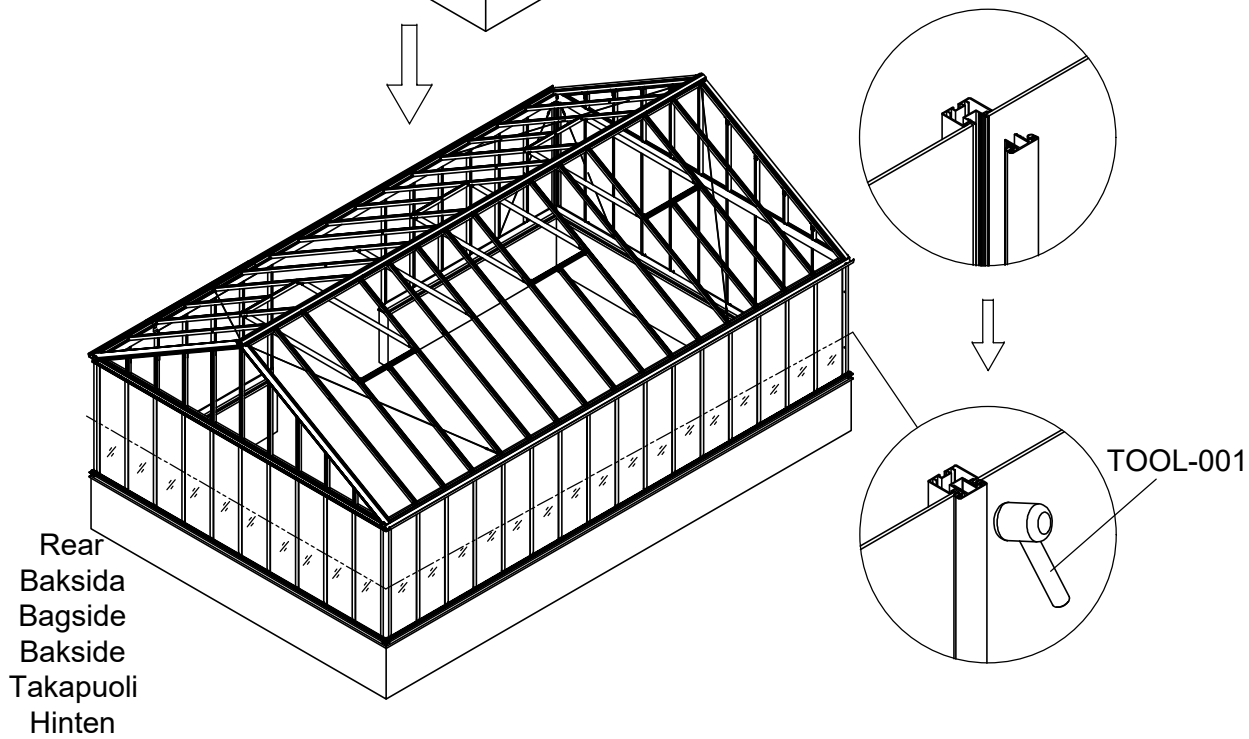


| 3054 | 3055 | 3056 | 3057 |
|---|---|---|---|
| 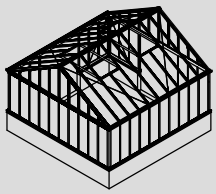 | 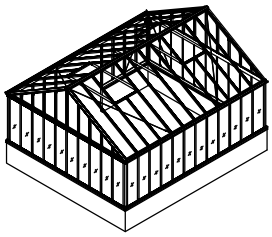 | 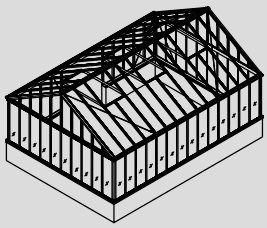 | 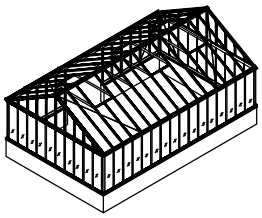 |

| Part | NO. | QTY. | | | | Length(MM) |
|---|---|---|---|---|---|---|
| | | 3054 | 3055 | 3056 | 3057 | |
| | 7C26-007N | 14.5M | 16M | 17.5M | 19M | |

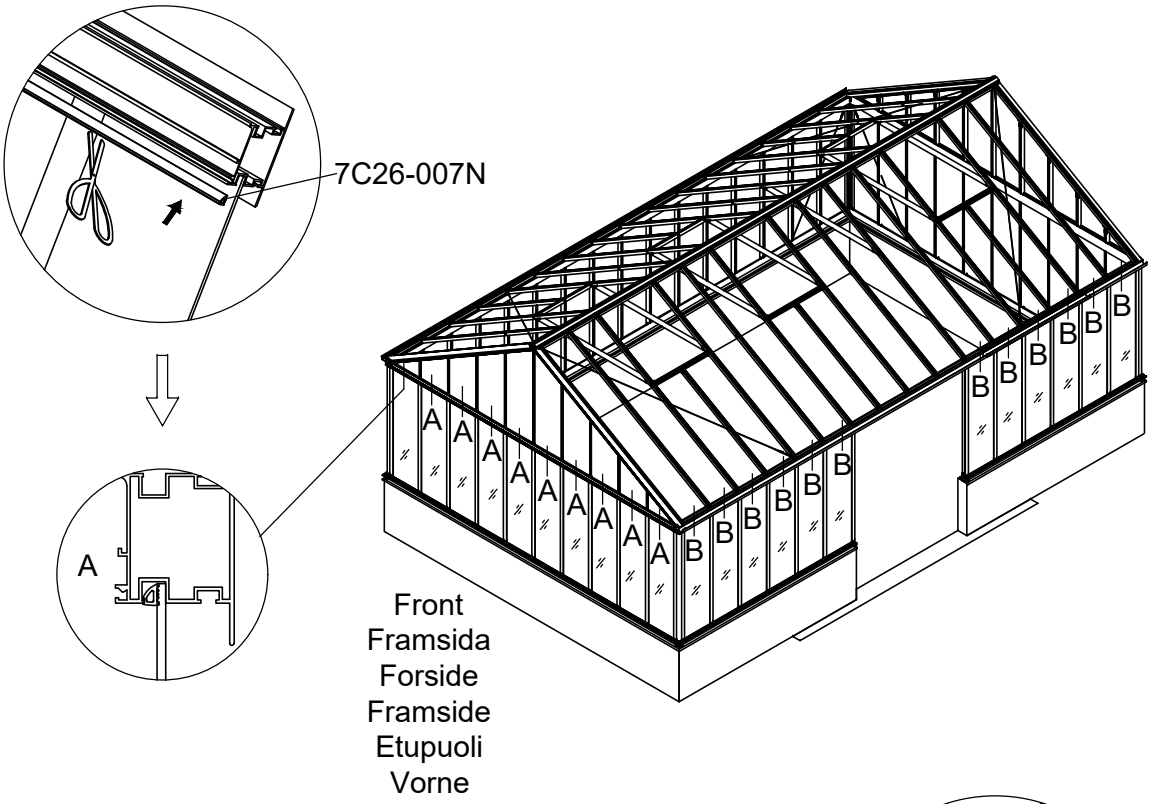


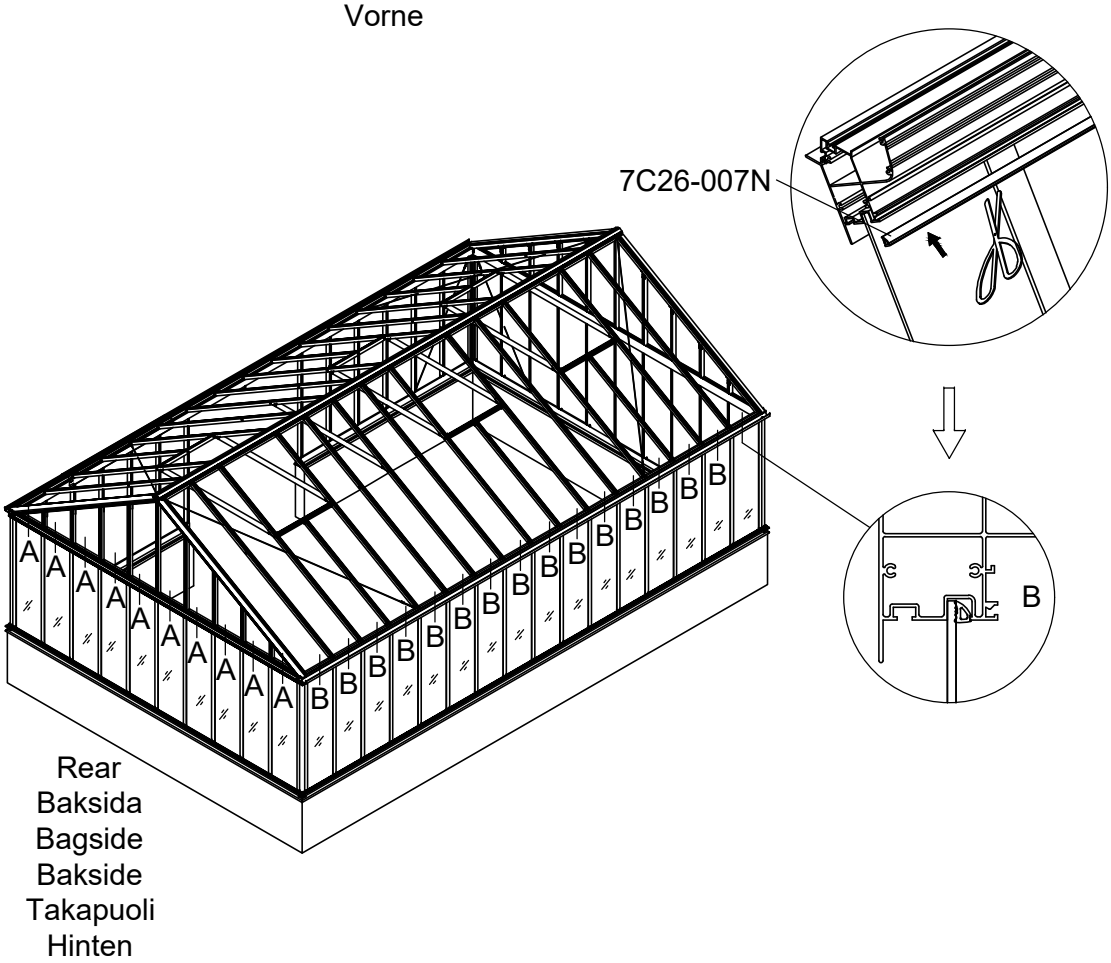

| Part | NO. | QTY. | Length(MM) |
|---|---|---|---|
| | 324×203 | 2 | 324 |
| | 354×420 | 2 | 420 |
| | 354×635 | 2 | 635 |
| | 354×852 | 2 | 852 |
| | 354×1068 | 2 | 1068 |

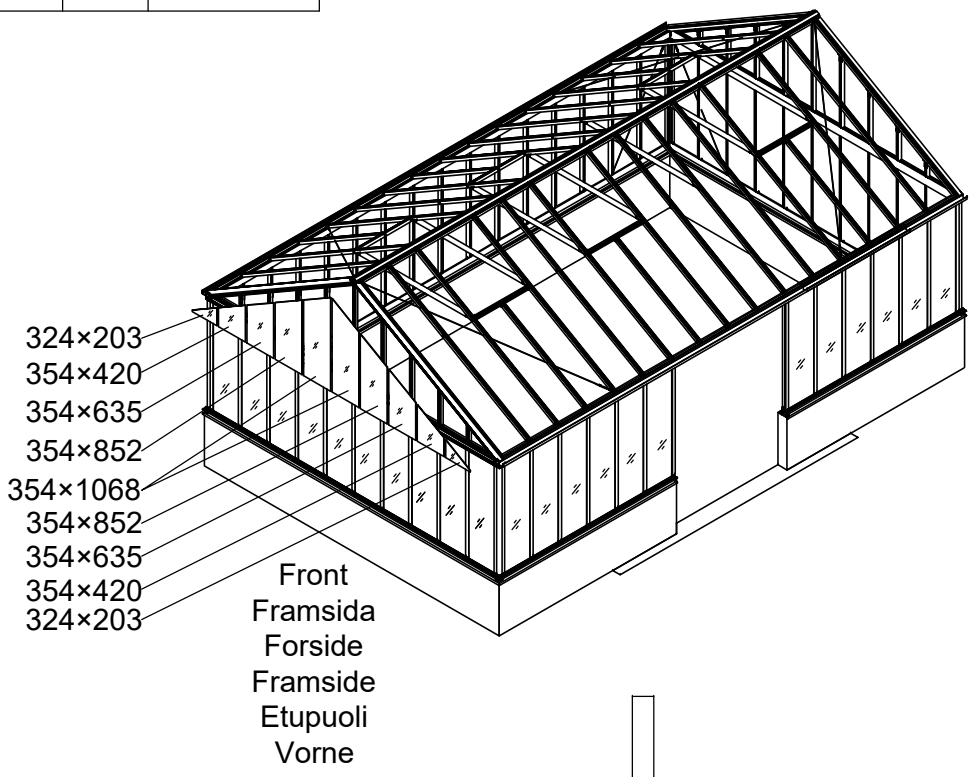


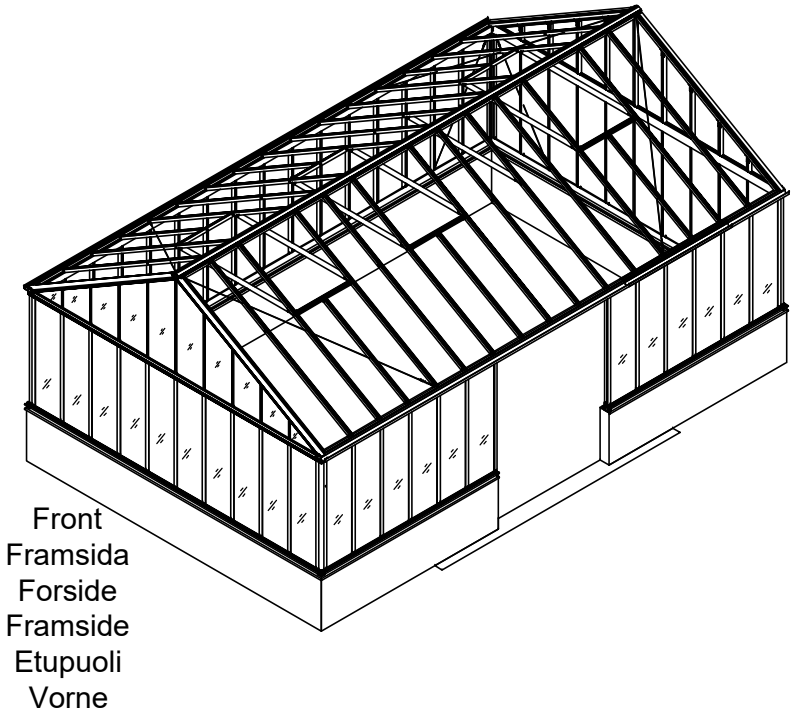

| Part | NO. | QTY. | Length(MM) |
|---|---|---|---|
| | 50X-Y03 | 1 | 1075 |
| | 50X-Y04R | 1 | 633 |
| | 50X-Y04L | 1 | 633 |
| | 50X-Y05R | 1 | 2149 |
| | 50X-Y05L | 1 | 2149 |

| Part | NO. | QTY. | Length(MM) | CTN NO. |
|---|---|---|---|---|
| | 50X-Y04A-R | 1 | 851 | 3149P-S |
| | 50X-Y04A-L | 1 | 851 | 3149P-S |
| | 40X-Y04R | 1 | 418 | 3149P-S |
| | 40X-Y04L | 1 | 418 | 3149P-S |
| | 40X-Y04A-R | 1 | 201 | 3149P-S |
| | 40X-Y04A-L | 1 | 201 | 3149P-S |

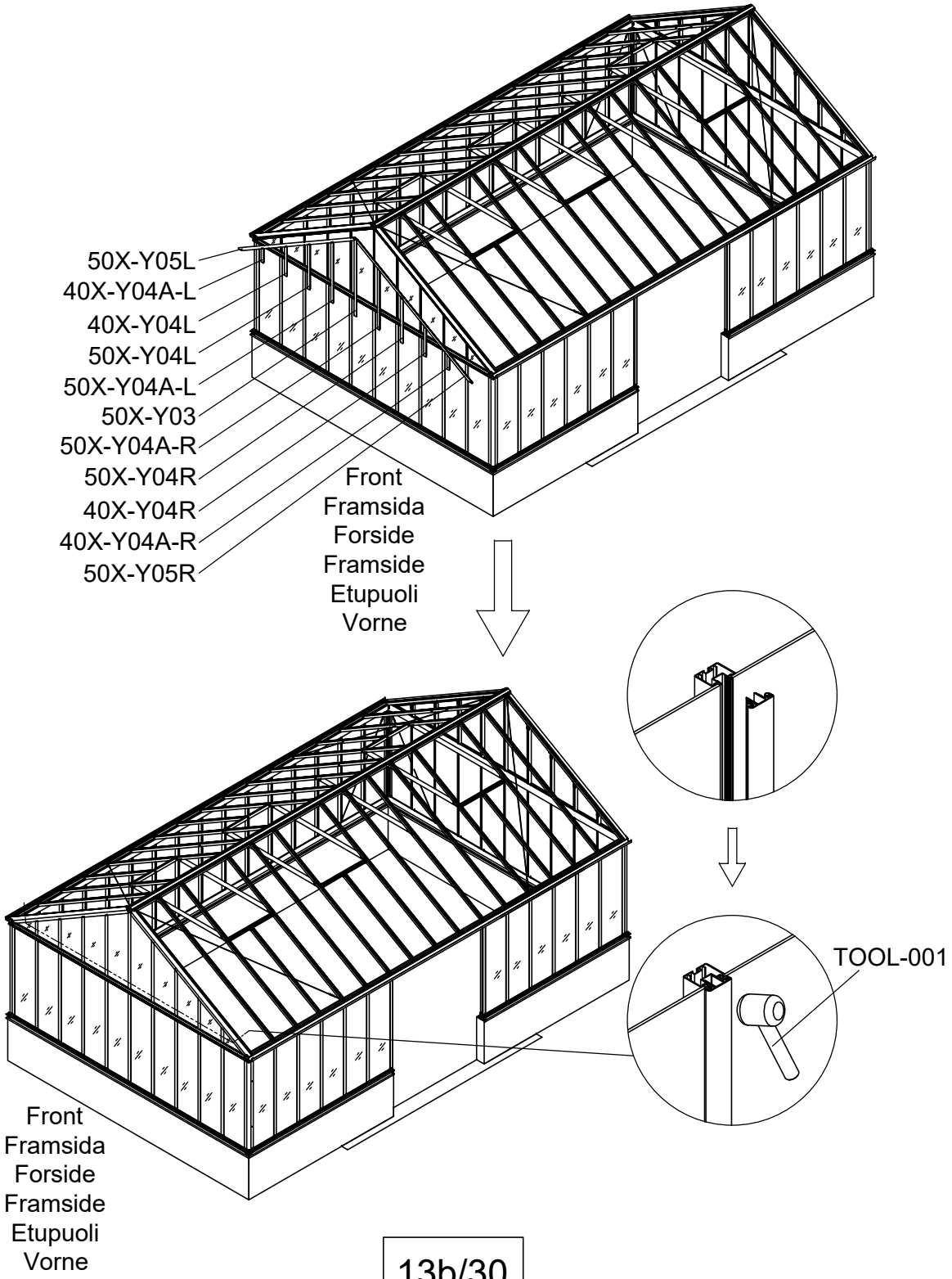

| Part | NO. | QTY. | Length(MM) |
|---|---|---|---|
| | 324×203 | 2 | 324 |
| | 354×420 | 2 | 420 |
| | 354×635 | 2 | 635 |
| | 354×852 | 2 | 852 |
| | 354×1068 | 2 | 1068 |

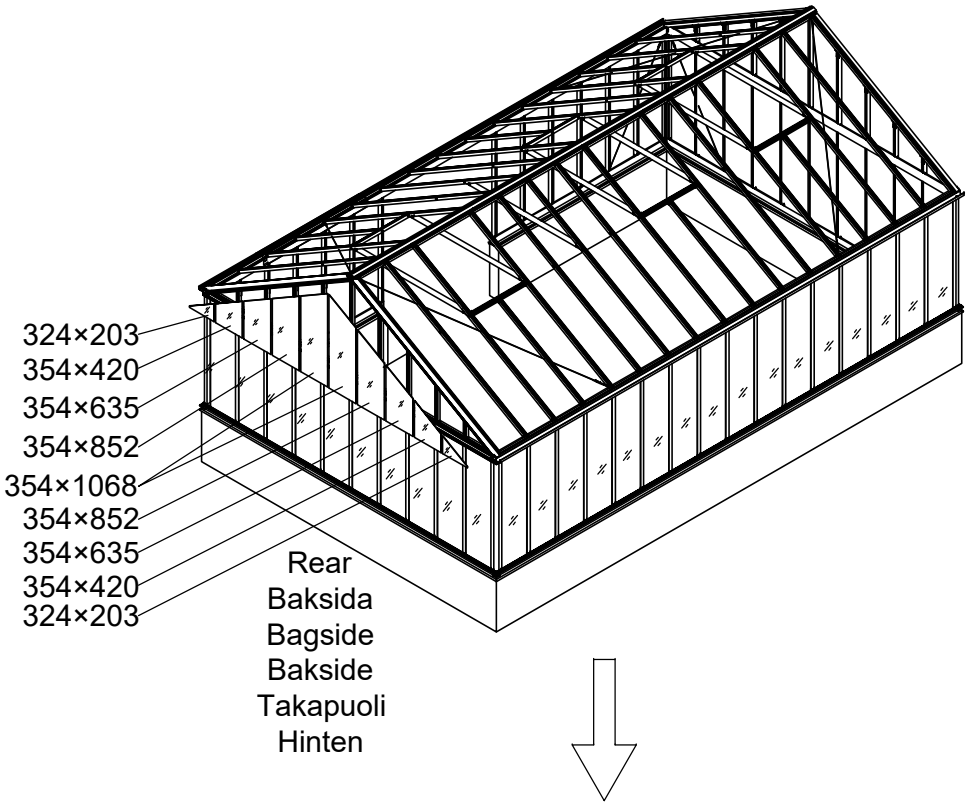


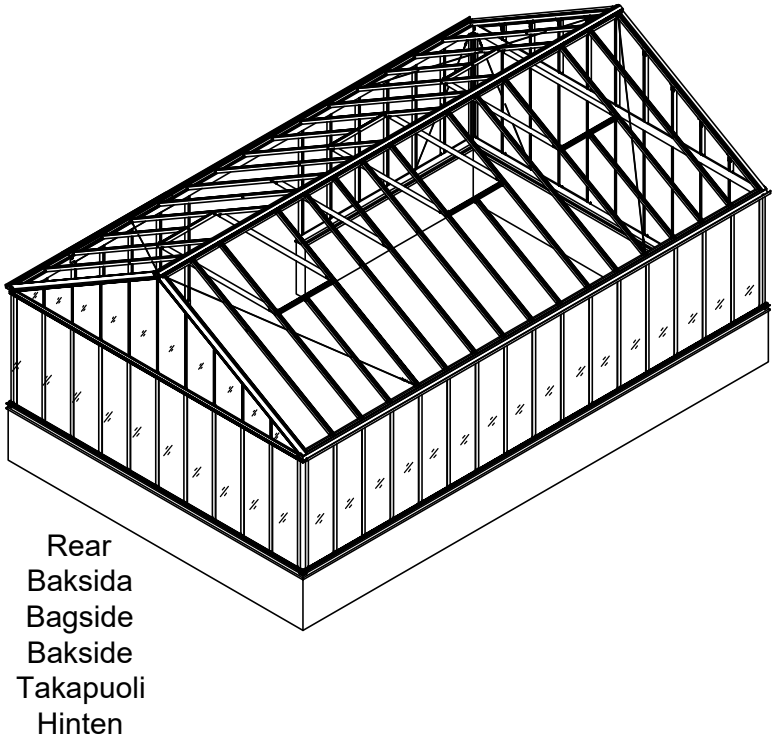

| Part | NO. | QTY. | Length(MM) |
|---|---|---|---|
| | 50X-Y03 | 1 | 1075 |
| | 50X-Y04R | 1 | 633 |
| | 50X-Y04L | 1 | 633 |
| | 50X-Y05R | 1 | 2149 |
| | 50X-Y05L | 1 | 2149 |

| Part | NO. | QTY. | Length(MM) | CTN NO. |
|---|---|---|---|---|
| | 50X-Y04A-R | 1 | 851 | 3149P-S |
| | 50X-Y04A-L | 1 | 851 | 3149P-S |
| | 40X-Y04R | 1 | 418 | 3149P-S |
| | 40X-Y04L | 1 | 418 | 3149P-S |
| | 40X-Y04A-R | 1 | 201 | 3149P-S |
| | 40X-Y04A-L | 1 | 201 | 3149P-S |

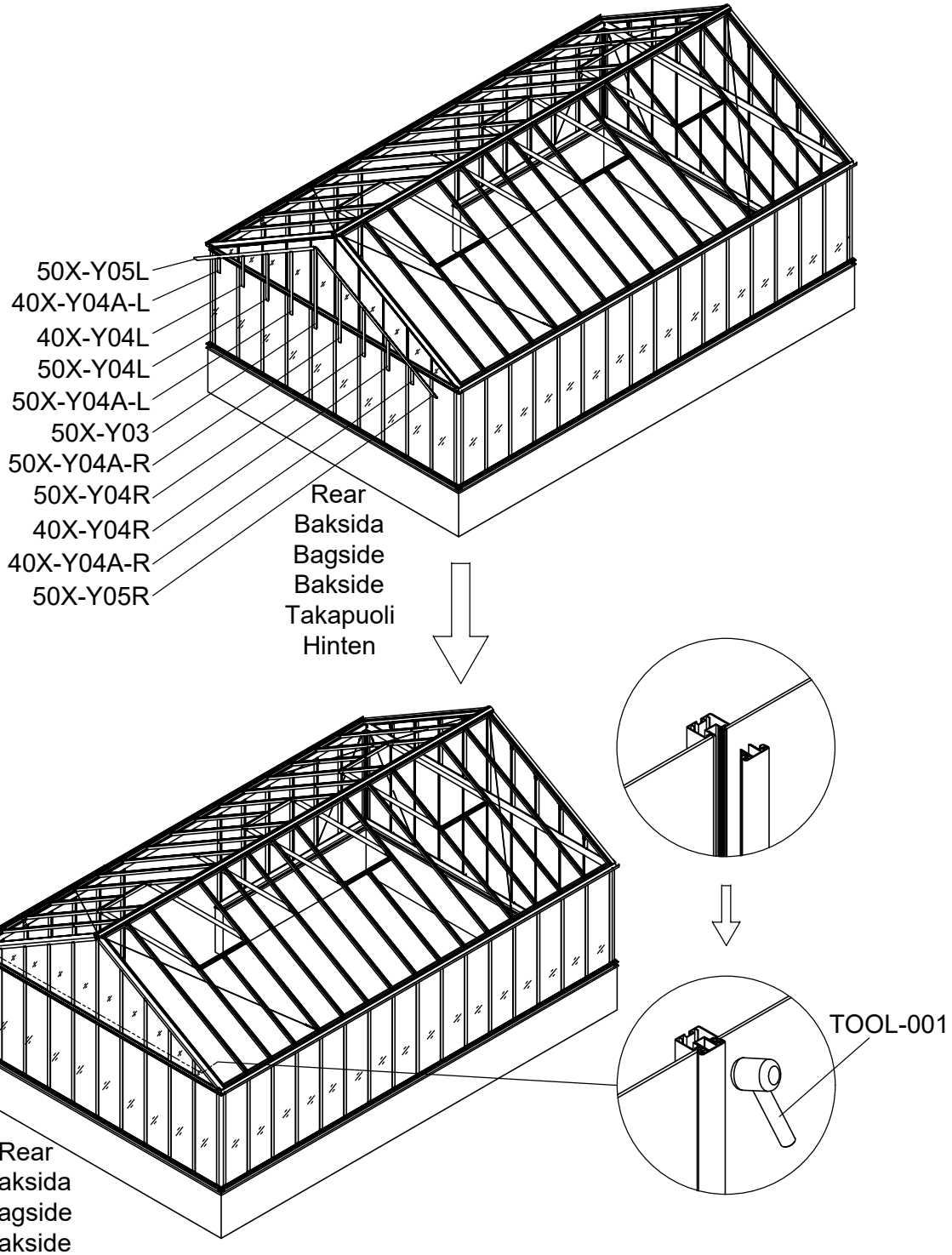

| Part | NO. | QTY. | | | | Length(MM) |
|---|---|---|---|---|---|---|
| | | 3054 | 3055 | 3056 | 3057 | |
| | 354×2198 | 12 | 16 | 16 | 20 | 2198 |
| | 354×1320 | 8 | 8 | 12 | 12 | 1320 |

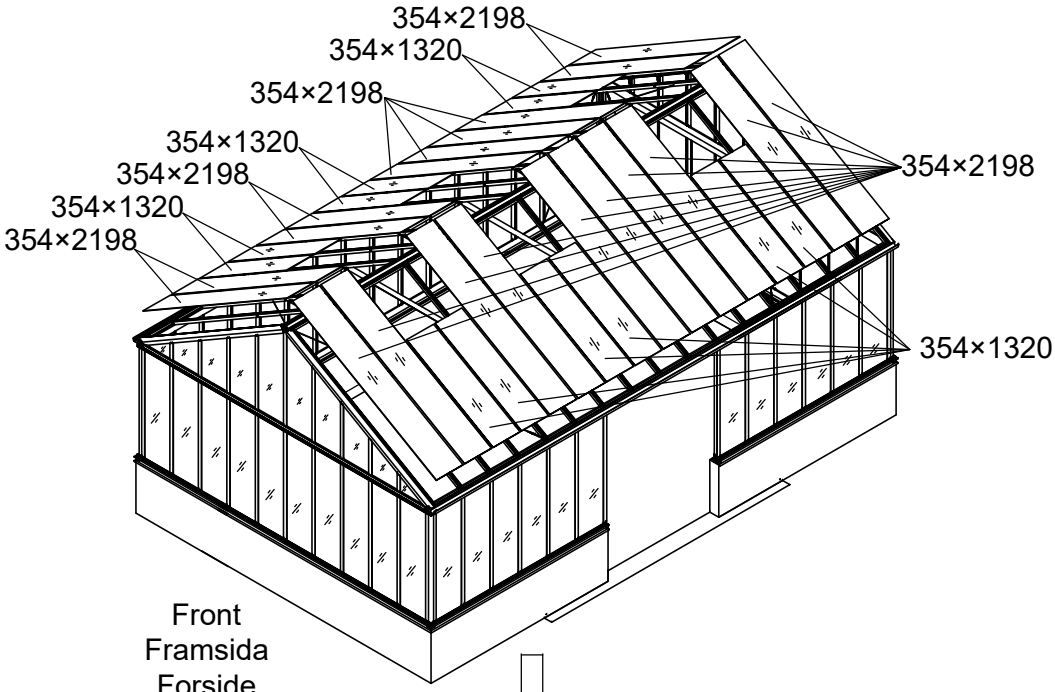


Front
Framsida
Forside
Framside
Etupuoli
Vorne

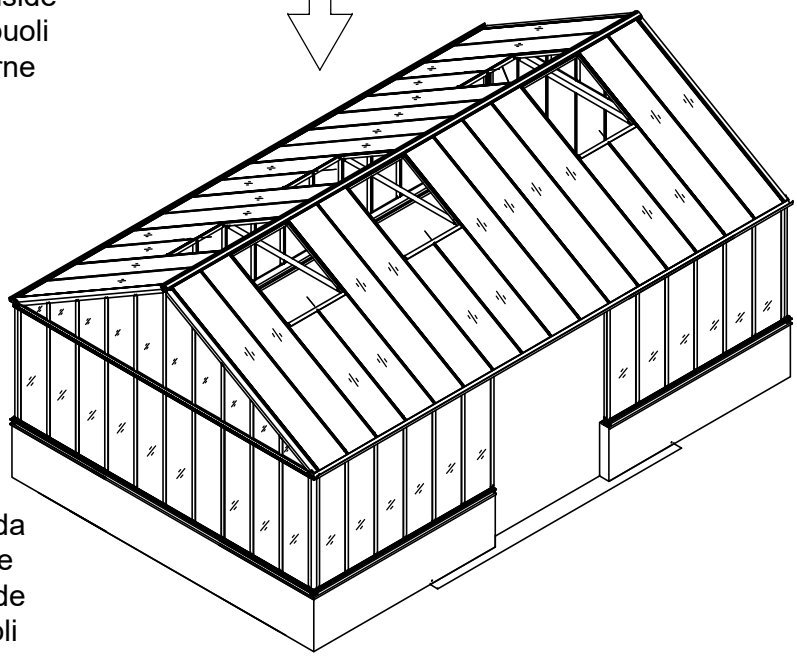

Front
Framsida
Forside
Framside
Etupuoli
Vorne

| 3054 | 3055 | 3056 | 3057 |
|---|---|---|---|
| 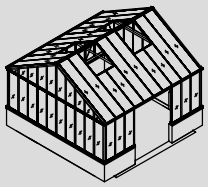 | 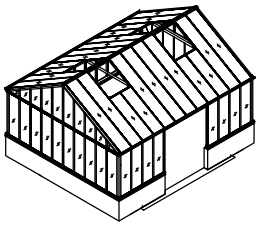 | 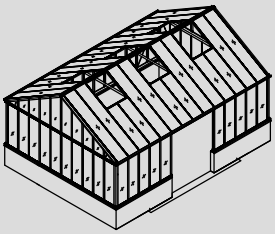 | 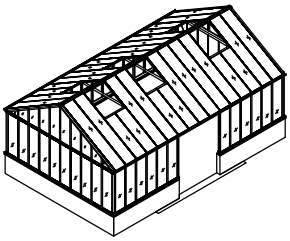 |

| Part | NO. | QTY. | | | | | | | | | | | | Length (MM) |
|---|---|---|---|---|---|---|---|---|---|---|---|---|---|---|
| | | 3054 | | | 3055 | | | 3056 | | | 3057 | | | |
| | | 3054 | 3149P -S | 3149P -S-2 | 3055 | 3149P -S | 3149P -S-2 | 3056 | 3149P -S | 3149P -S-2 | 3057 | 3149P -S | 3149P -S-2 | |
| | 50X-Y06 | 12 | 6 | 0 | 14 | 6 | 2 | 16 | 6 | 2 | 18 | 6 | 4 | 2190 |
| | 40X-Y07 | 4 | 0 | 0 | 4 | 0 | 0 | 6 | 0 | 0 | 6 | 0 | 0 | 712 |
| | 50X-Y06A | 0 | 4 | 0 | 0 | 4 | 0 | 0 | 4 | 2 | 0 | 4 | 2 | 1312 |

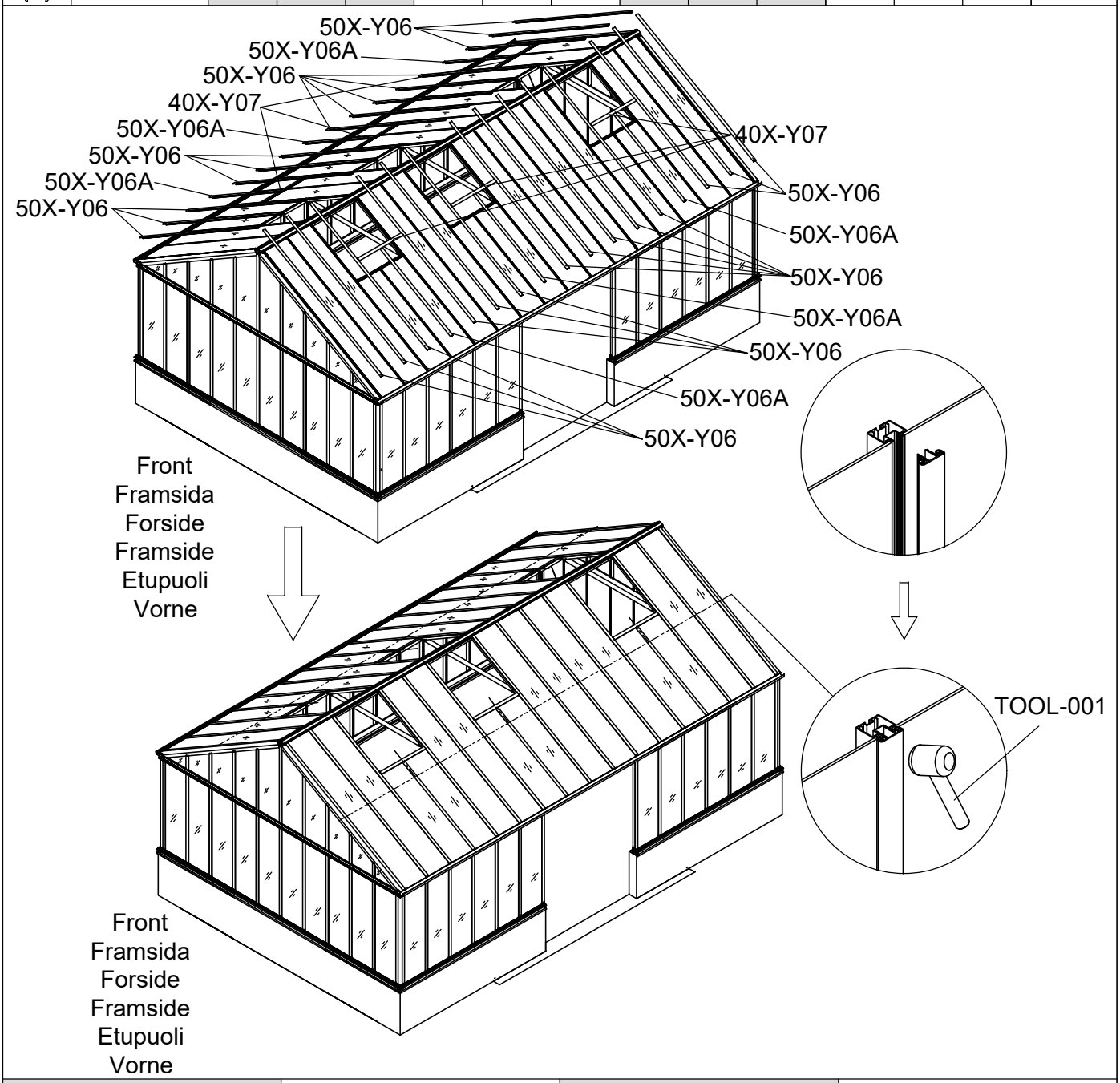


| 3054 | 3055 | 3056 | 3057 |
|---|---|---|---|
| 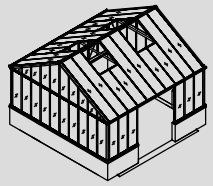 | 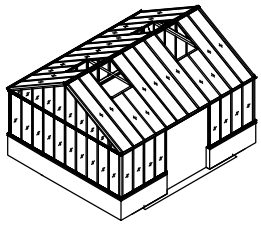 | 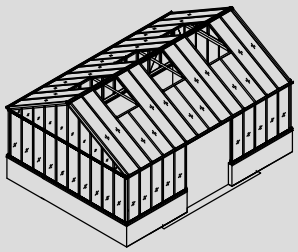 | 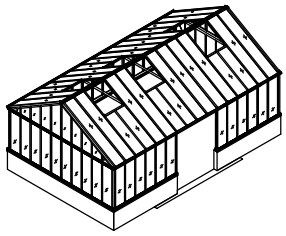 |

| Part | NO. | QTY. | | | | Length(MM) |
|---|---|---|---|---|---|---|
| | | 3054 | 3055 | 3056 | 3057 | |
| | 7C26-009A | 5M | 6.5M | 6.5M | 8M | |
| | 7C26-007N | 7.5M | | | | |

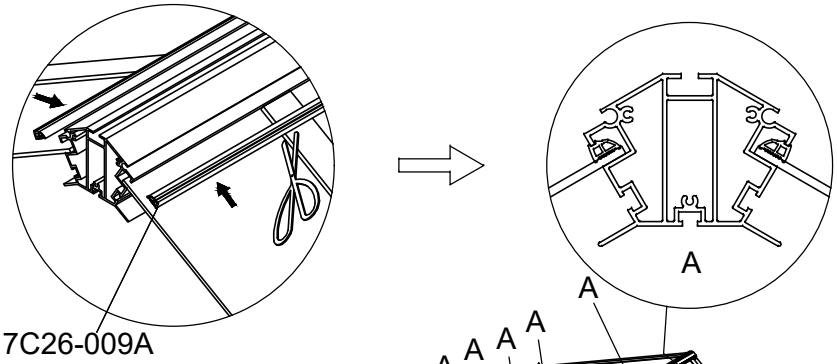


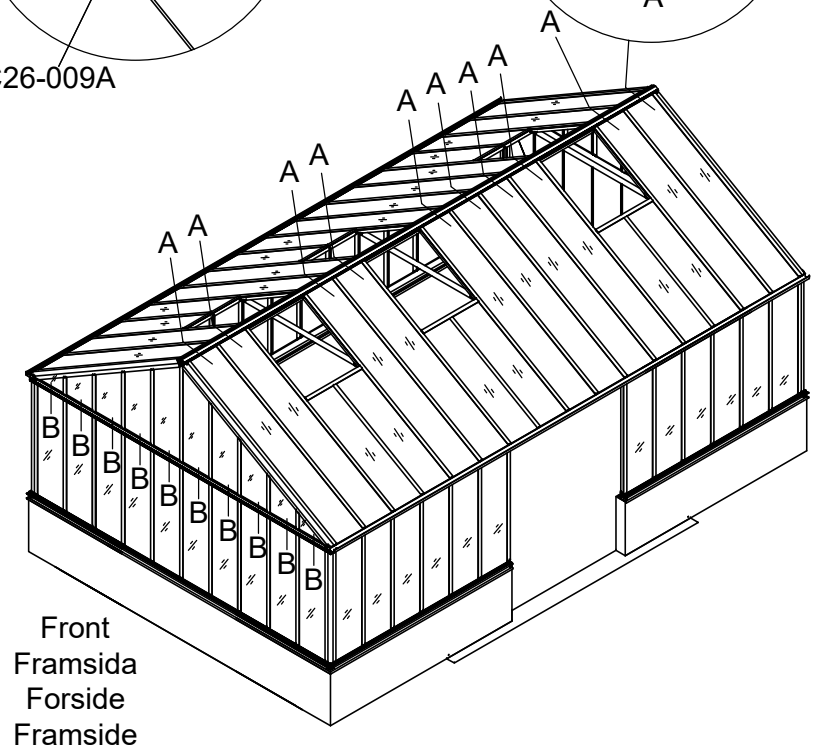


Front
Framsida
Forside
Framside
Etupuoli
Vorne

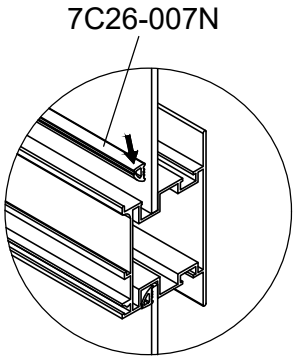


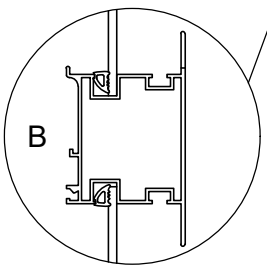


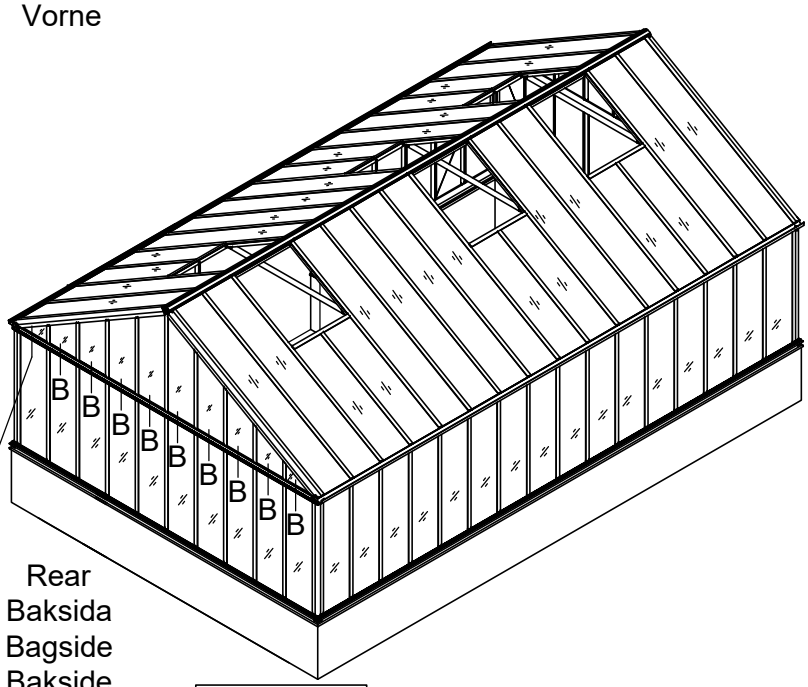


Rear
Baksida
Bagside
Bakside
Takapuoli
Hinten

| Part | Product | NO. | Length (MM) | QTY. | CTN NO. | Code |
|---|---|---|---|---|---|---|
| | 3054 | 40X-Y62-5A | 3883 | 1 | 3043P-S-BASE5 | A007 |
| | 3055 | 40X-Y62-6A | 4634 | 1 | 3043P-S-BASE6 | |
| | 3056 | 40X-Y62-7A | 5385 | 1 | 3043P-S-BASE7 | |
| | 3057 | 40X-Y62-8A | 6136 | 1 | 3043P-S-BASE8 | |
| | 3054 | 40X-Y62-5B | 430 | 2 | 3043PA-S-5 | A014 |
| | 3055 | 40X-Y62-6B | 806 | 2 | 3043PA-S-6 | |
| | 3056 | 40X-Y62-7B | 1181 | 2 | 3043PA-S-7 | |
| | 3057 | 40X-Y62-8B | 1557 | 2 | 3043PA-S-8 | |

| Part | NO. | QTY. | Length(MM) | CTN NO. |
|---|---|---|---|---|
| | 50X-Y60-AN | 1 | 3774 | 3043PA-S-5G |

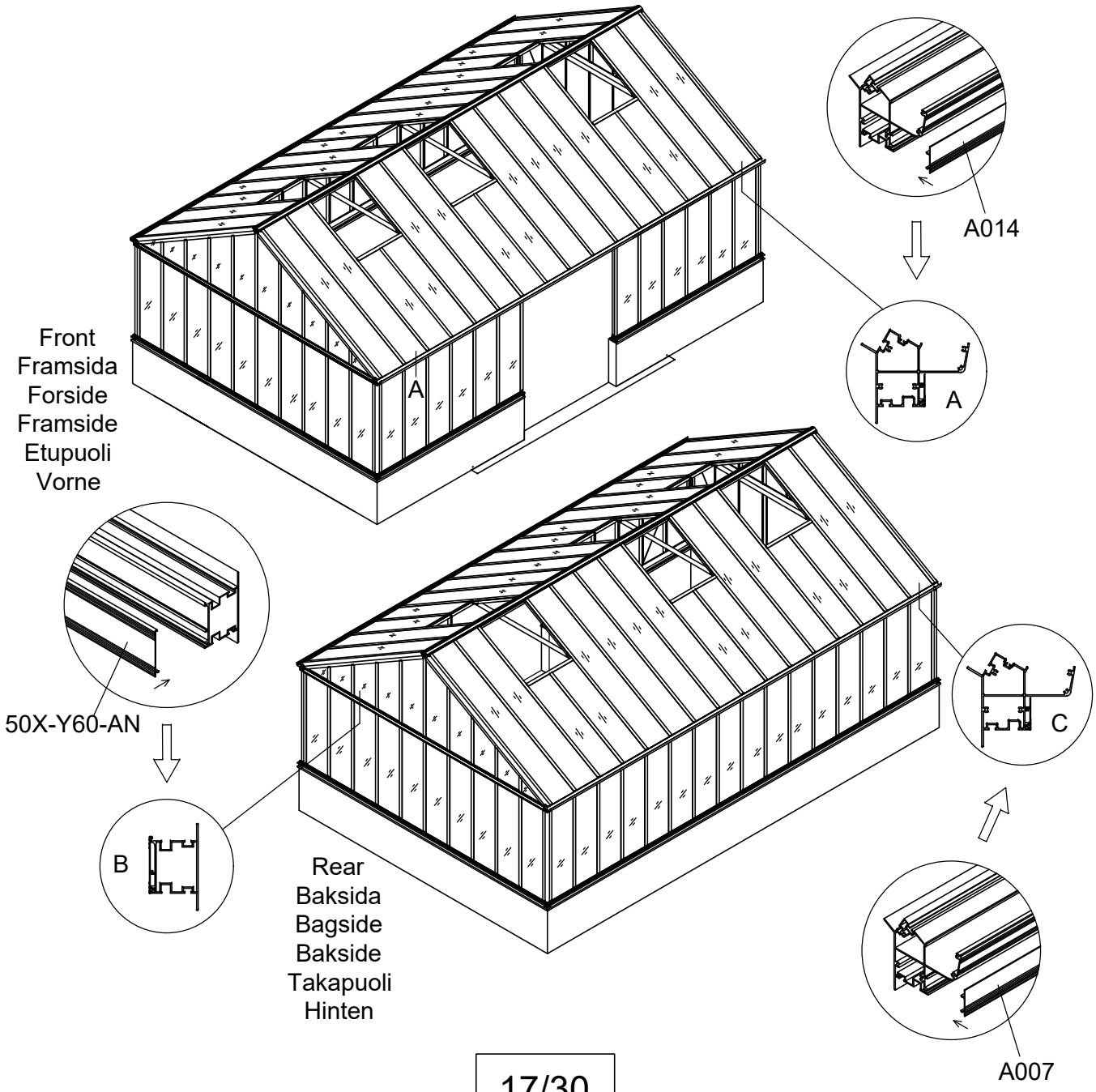

| Part | NO. | QTY. | Length(MM) |
|---|---|---|---|
| | 40A-Y90 | 2 | 1866 |
| | 40A-Y91R | 1 | 1866 |
| | 40A-Y91L | 1 | 1866 |
| | 40A-Y92R | 1 | 769 |
| | 40A-Y92L | 1 | 769 |
| | 40A-Y93 | 2 | 769 |
| | W03 | 8 | 30 |
| | W04 | 16 | PCS |

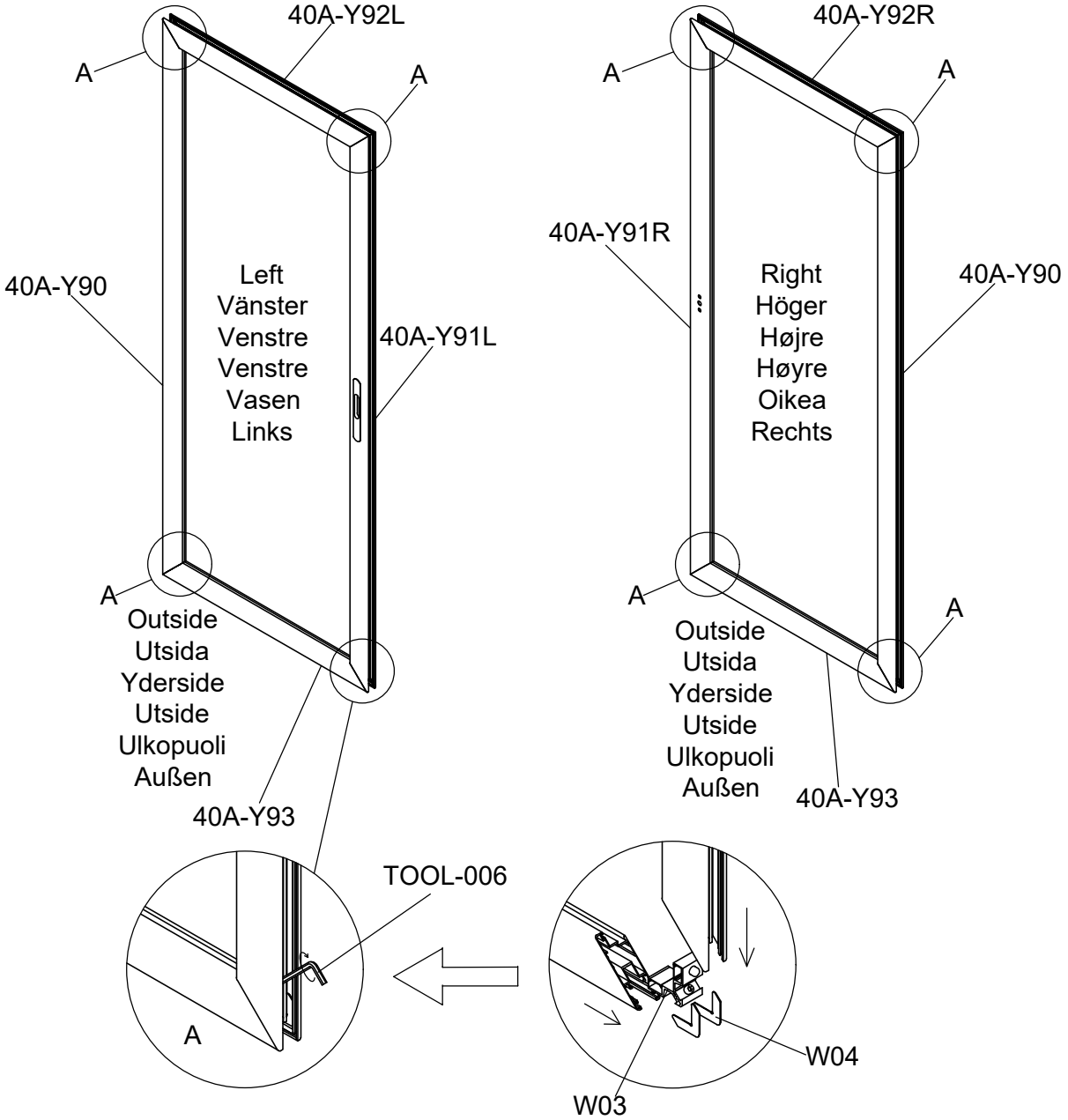

| Part | NO. | QTY. | Length(MM) |
|---|---|---|---|
| | 659×1756 | 1 | 1756 |
| | 40A-Y95 | 2 | 1765 |
| | 40A-Y96 | 2 | 668 |

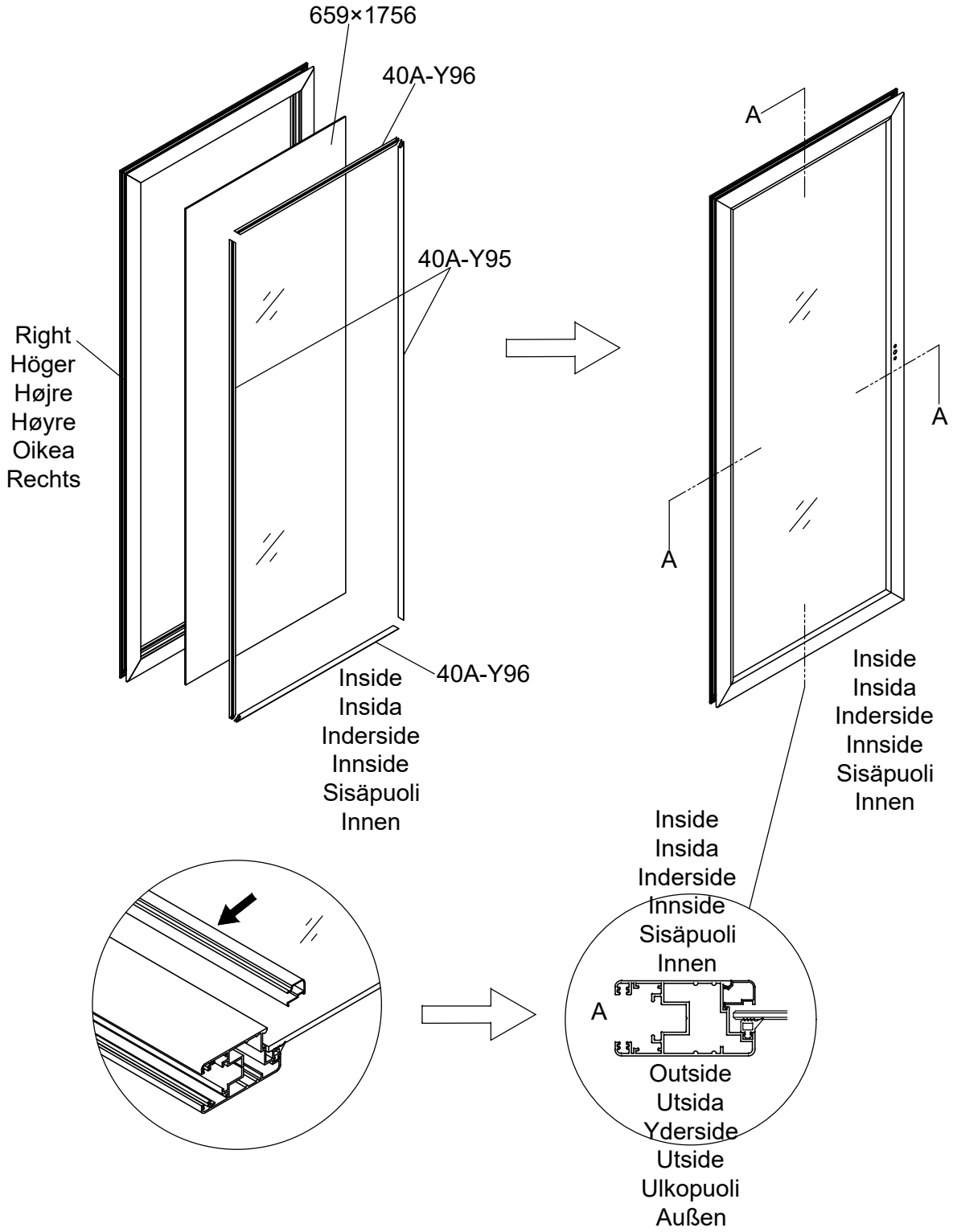

| Part | NO. | QTY. | Length(MM) |
|---|---|---|---|
| | 659×1756 | 1 | 1756 |
| | 40A-Y95 | 2 | 1765 |
| | 40A-Y96 | 2 | 668 |

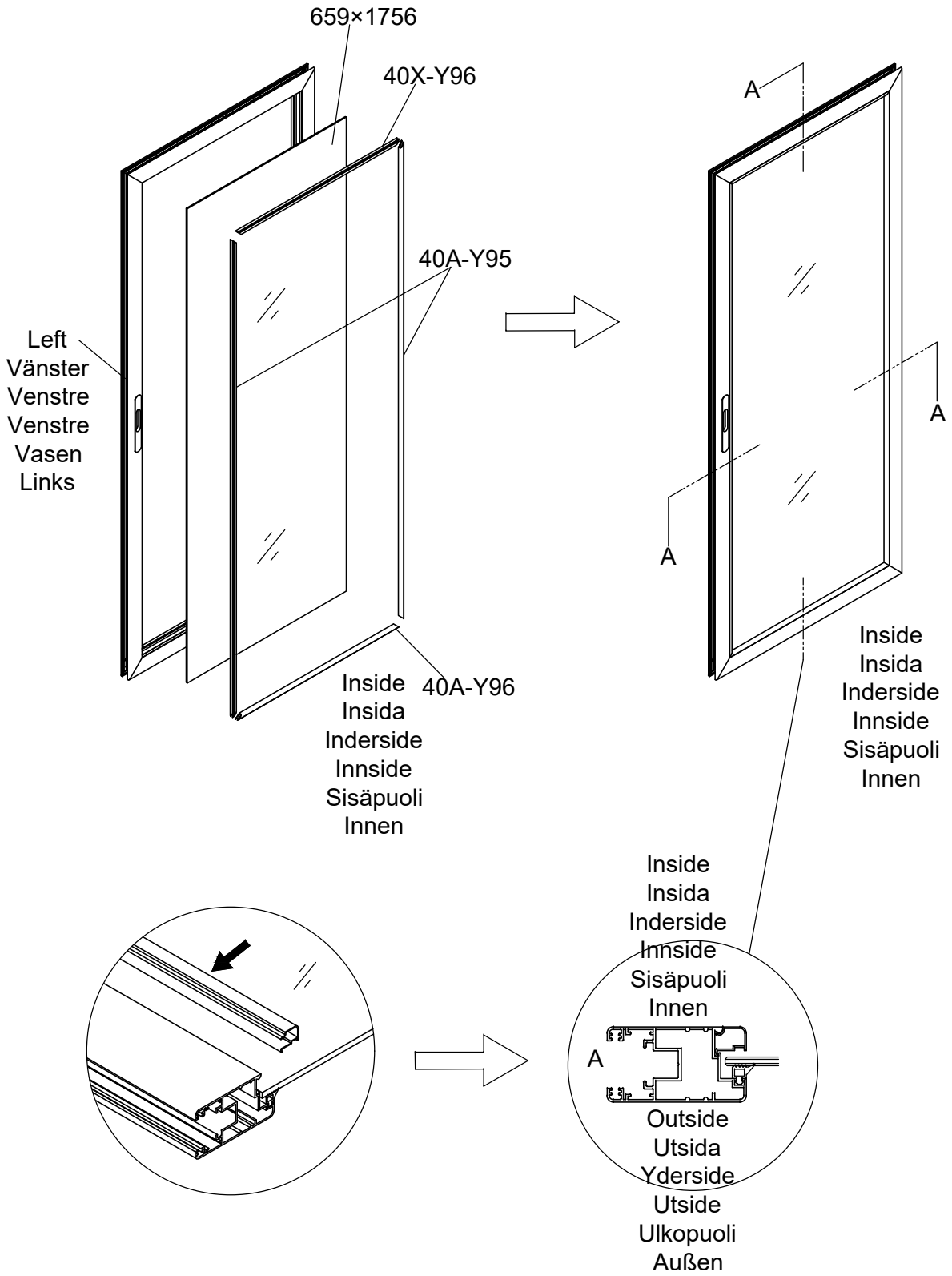

| Part | NO. | QTY. | Length(MM) |
|---|---|---|---|
| | MCJT002 | 11M | |

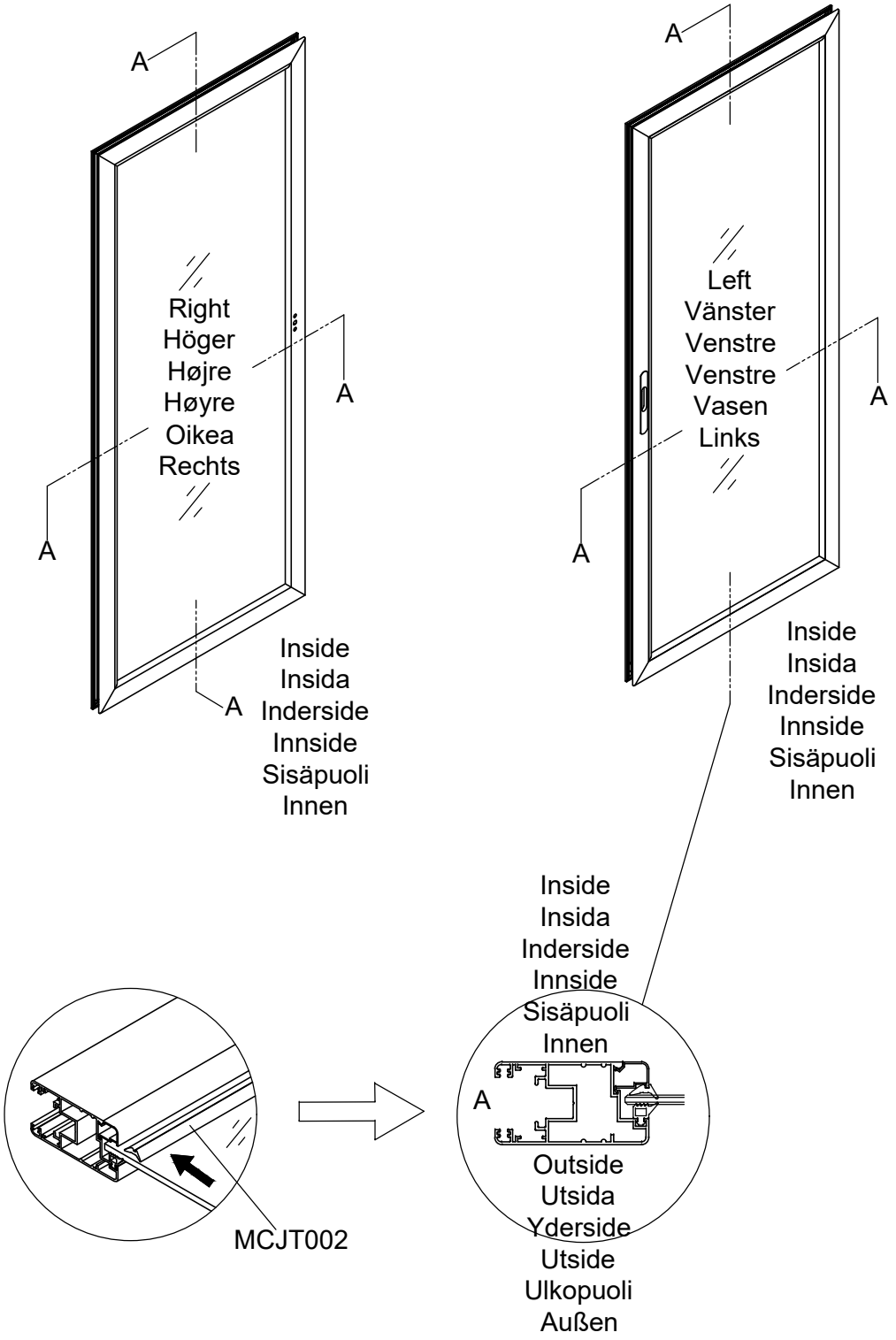

| Part | NO. | QTY. | Length(MM) |
|---|---|---|---|
| | 40A-Y97R | 1 | 1860 |
| | 40A-Y97-A | 1 | 1851 |
| | Z4.2-13 | 4 | PCS |

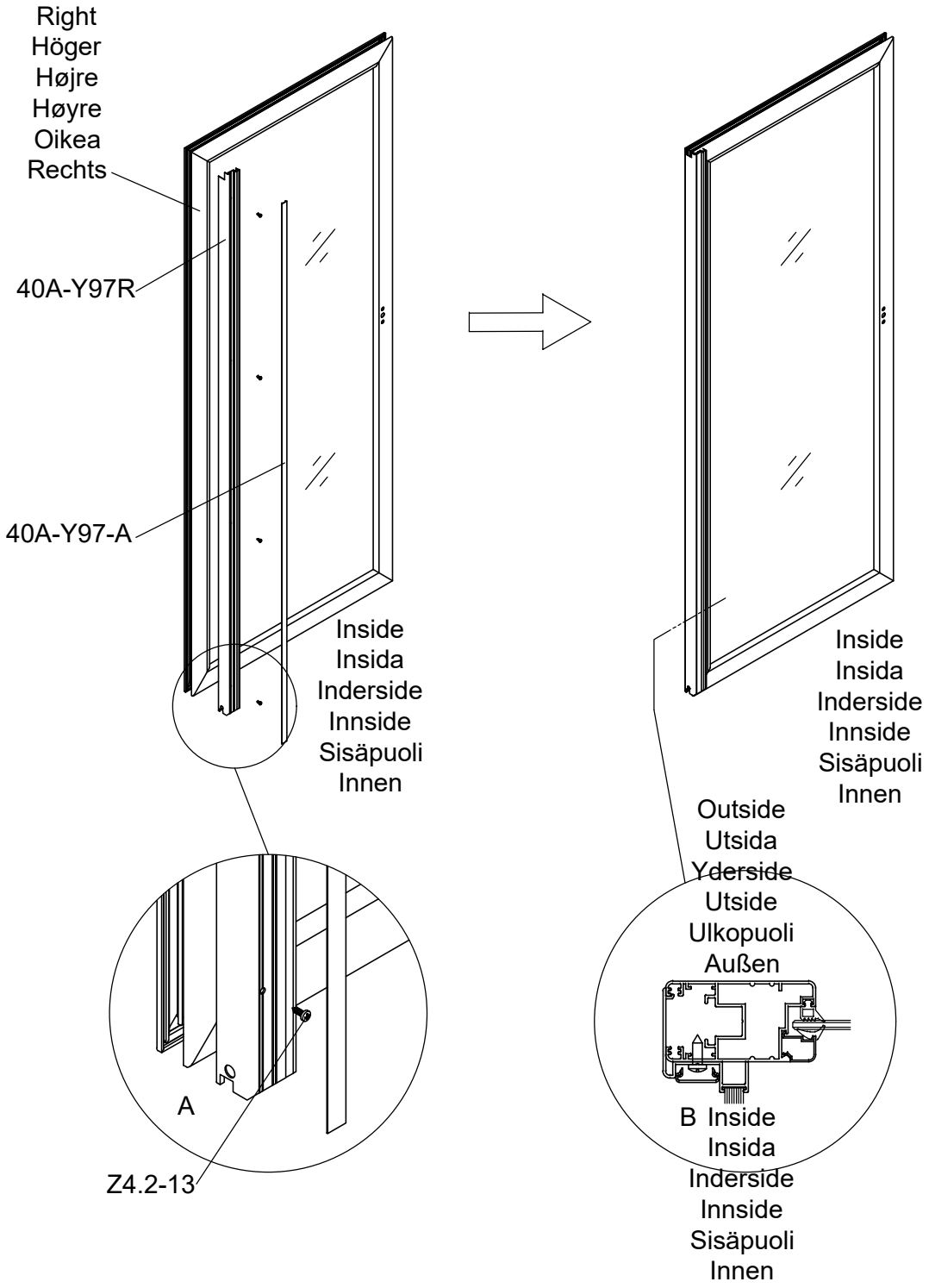

| Part | NO. | QTY. | Length(MM) |
|---|---|---|---|
| | 40A-Y97L | 1 | 1860 |
| | 40A-Y97-A | 1 | 1851 |
| | Z4.2-13 | 4 | PCS |

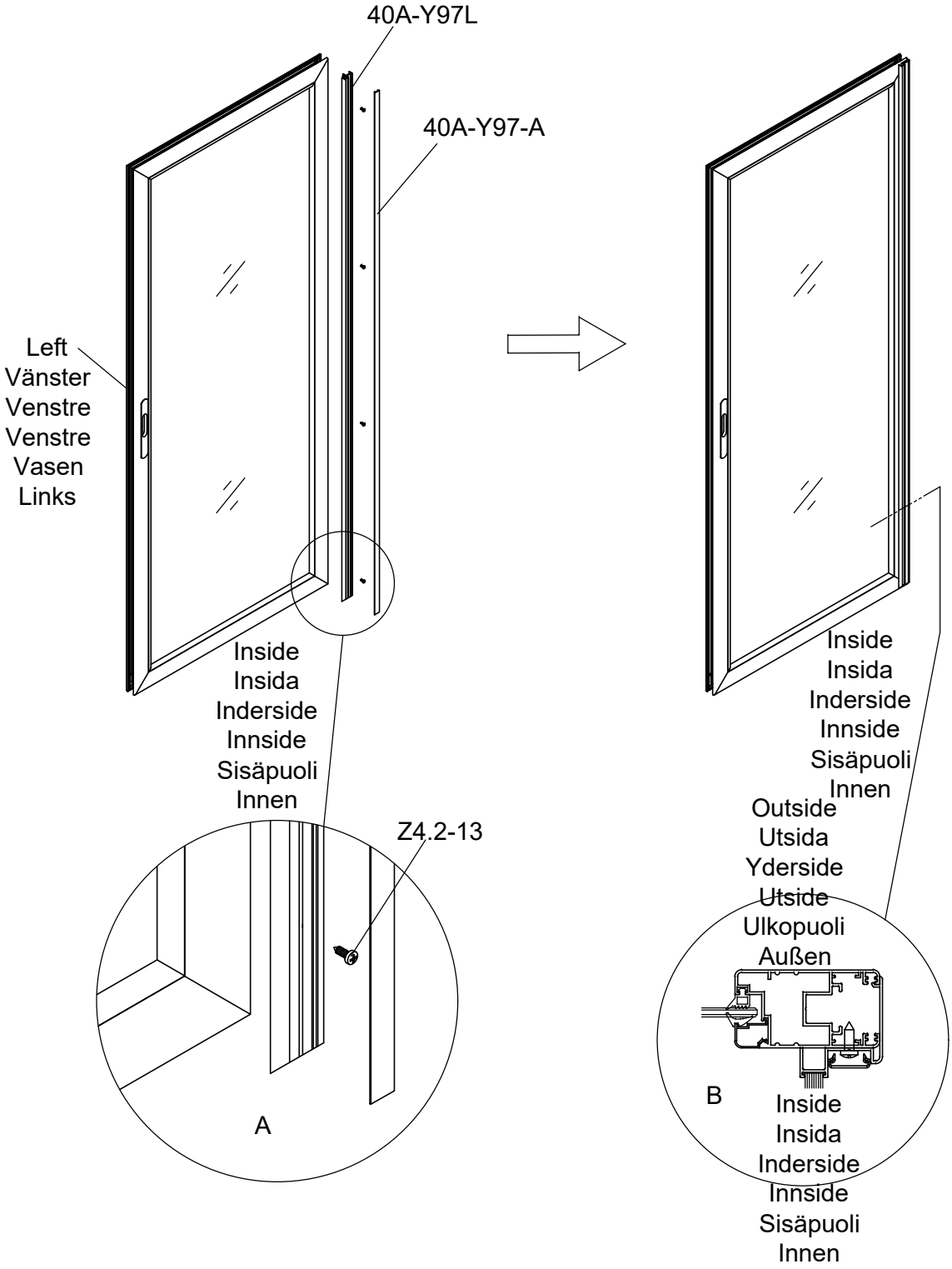

| Part | NO. | QTY. | Length(MM) |
|---|---|---|---|
| | 40A-Y94 | 1 | 1835 |
| | NSST120 | 1.9M | |
| | T04 | 2 | PCS |
| | Z4.2-38 | 3 | PCS |
| | Z3.5-25 | 4 | PCS |

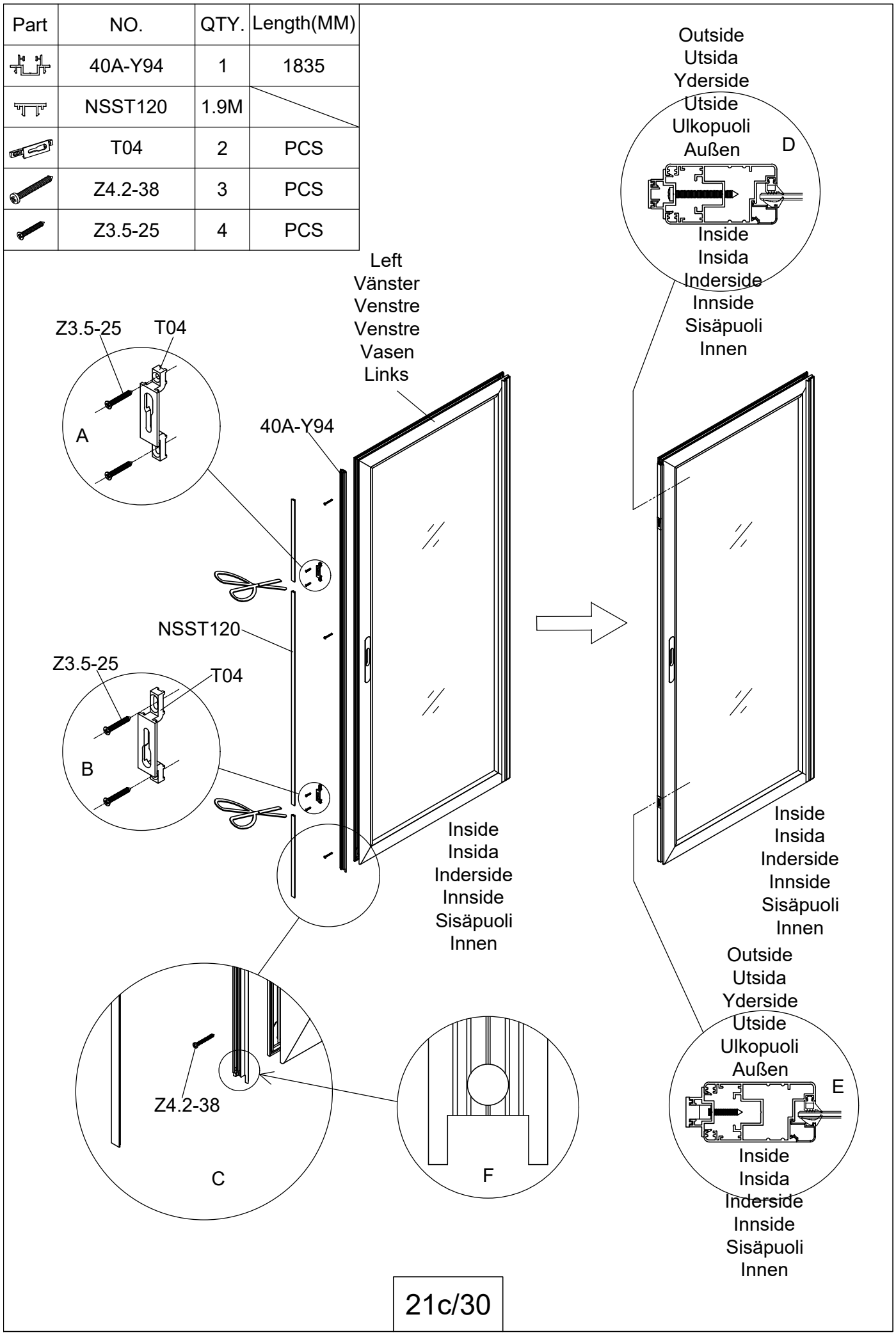

| Part | NO. | QTY. | Length(MM) |
|---|---|---|---|
| | 40A-Y98-R | 1 | 1910 |
| | 40A-Y98-L | 1 | 1910 |
| | M6-35 | 2 | PCS |
| | Si6-35 | 6 | PCS |
| | J05 | 6 | PCS |

| Code | Length(MM) | | |
|---|---|---|---|
| | 3055 | 3056 | 3057 |
| L3 | 815.5 | 1191 | 1566.5 |

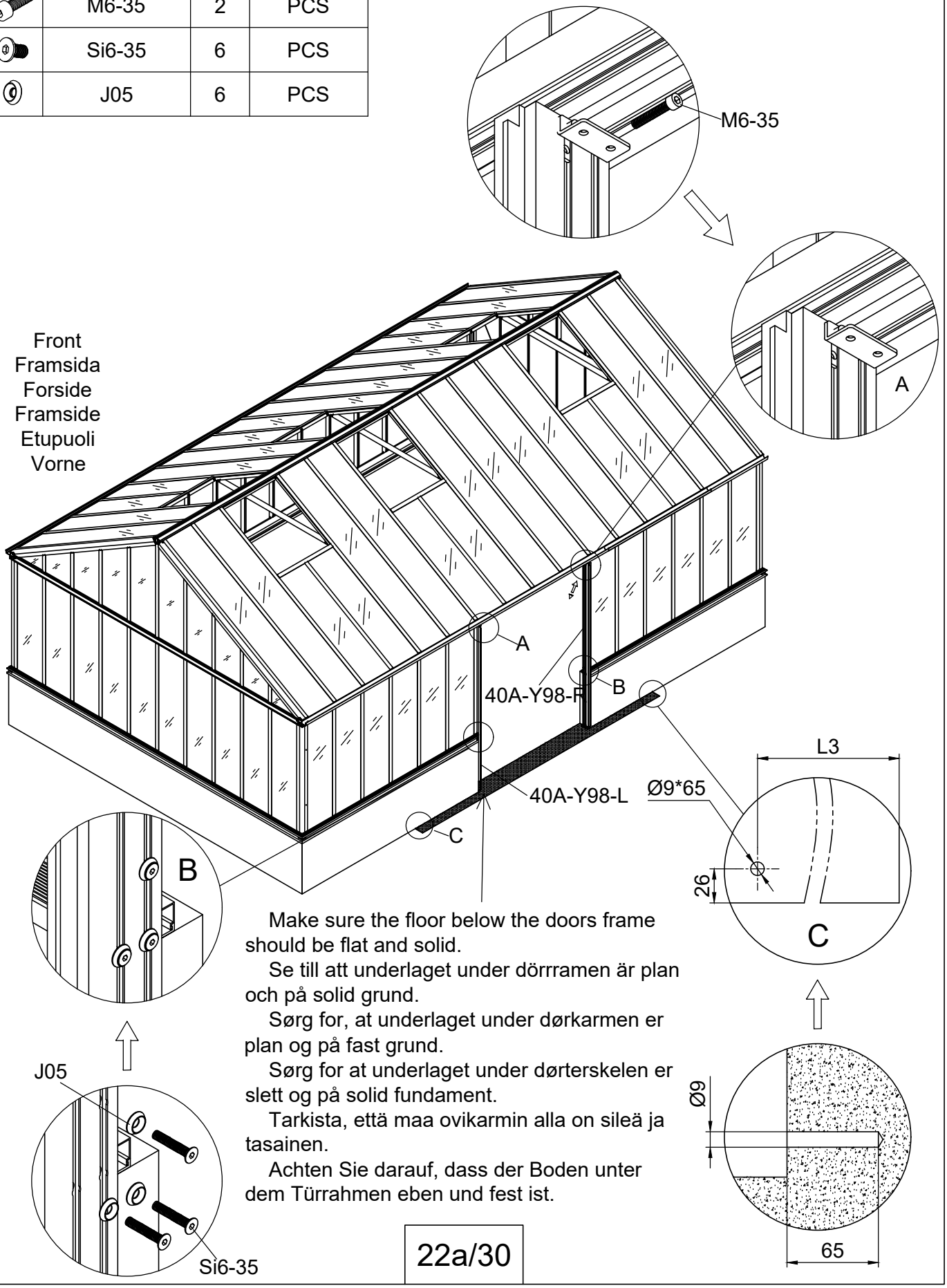


Make sure the floor below the doors frame should be flat and solid.

Se till att underlaget under dörrramen är plan och på solid grund.

Sørg for, at underlaget under dørkarmen er plan og på fast grund.

Sørg for at underlaget under dørterskelen er slett og på solid fundament.

Tarkista, että maa ovikarmin alla on sileä ja tasainen.

Achten Sie darauf, dass der Boden unter dem Türrahmen eben und fest ist.

| Part | NO. | QTY. | Length(MM) |
|---|---|---|---|
| | 40A-Y99 | 1 | 1424 |
| | 40A-Y100 | 1 | 1424 |
| | Si6-16 | 10 | PCS |
| | J05 | 10 | PCS |
| | PS6-60 | 2 | PCS |

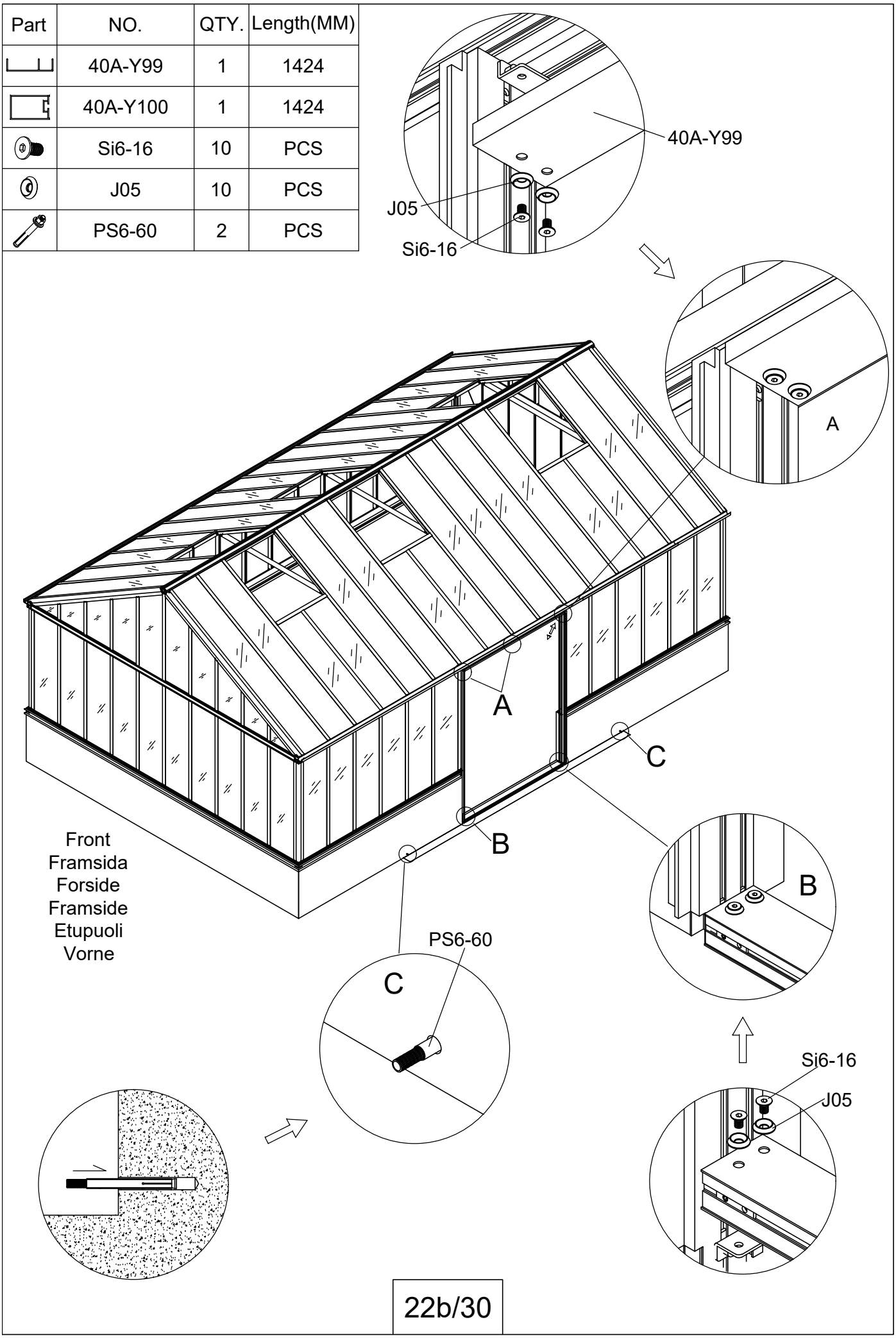

| Part | NO. | QTY. | Length(MM) |
|---|---|---|---|
| | 50A-Y64 | 1 | 3768 |
| | 40A-Y17N | 1 | 3110 |
| | 7C28-004 | 5 | PCS |
| | Z4.2-50 | 5 | PCS |
| | Si6-25 | 3 | PCS |
| | J05 | 3 | PCS |
| | 7C26-031 | 2 | PCS |

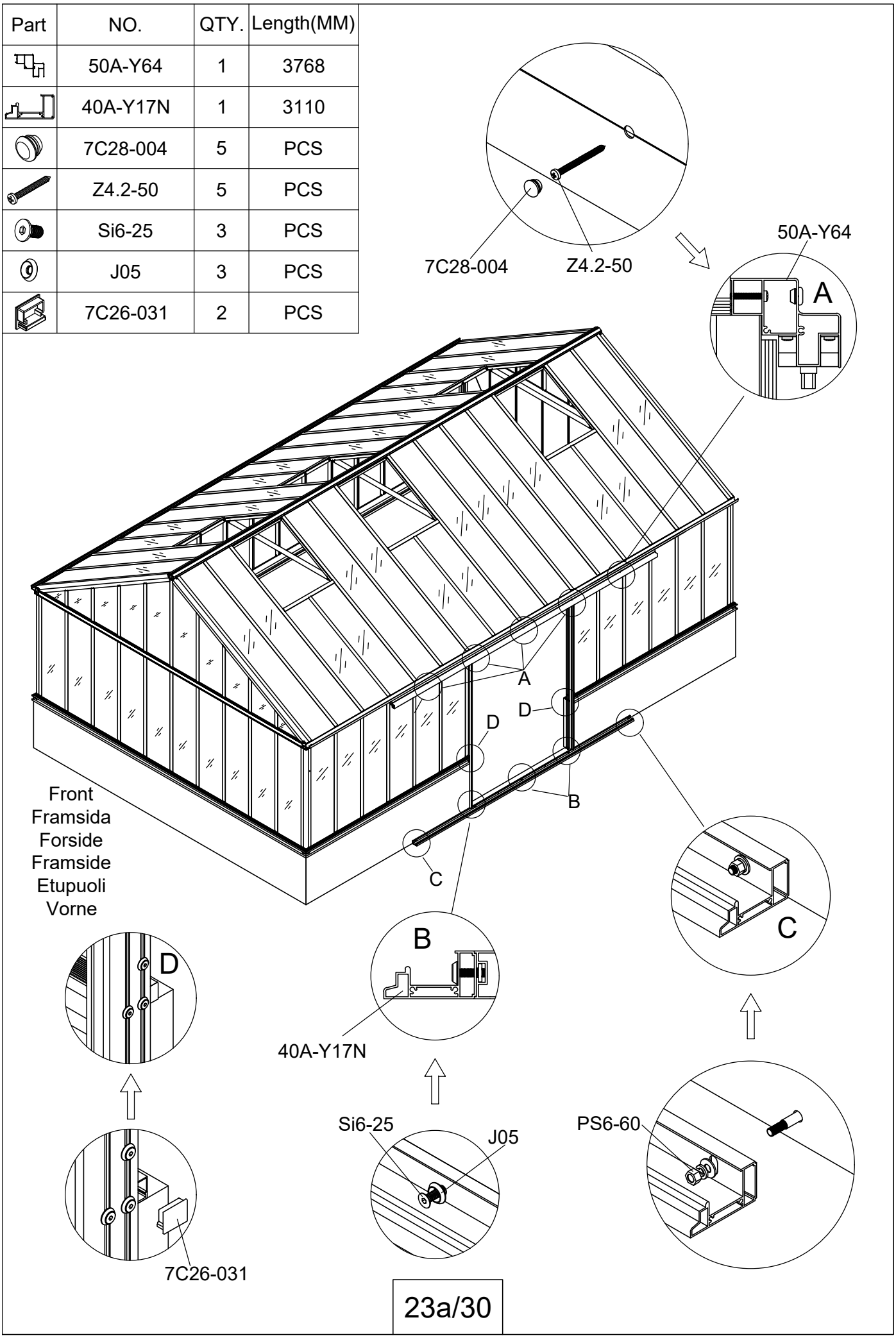

| Part | NO. | QTY. | Length(MM) |
|---|---|---|---|
| | 40A-Y98A-R | 1 | 1855 |
| | 40A-Y98A-L | 1 | 1855 |

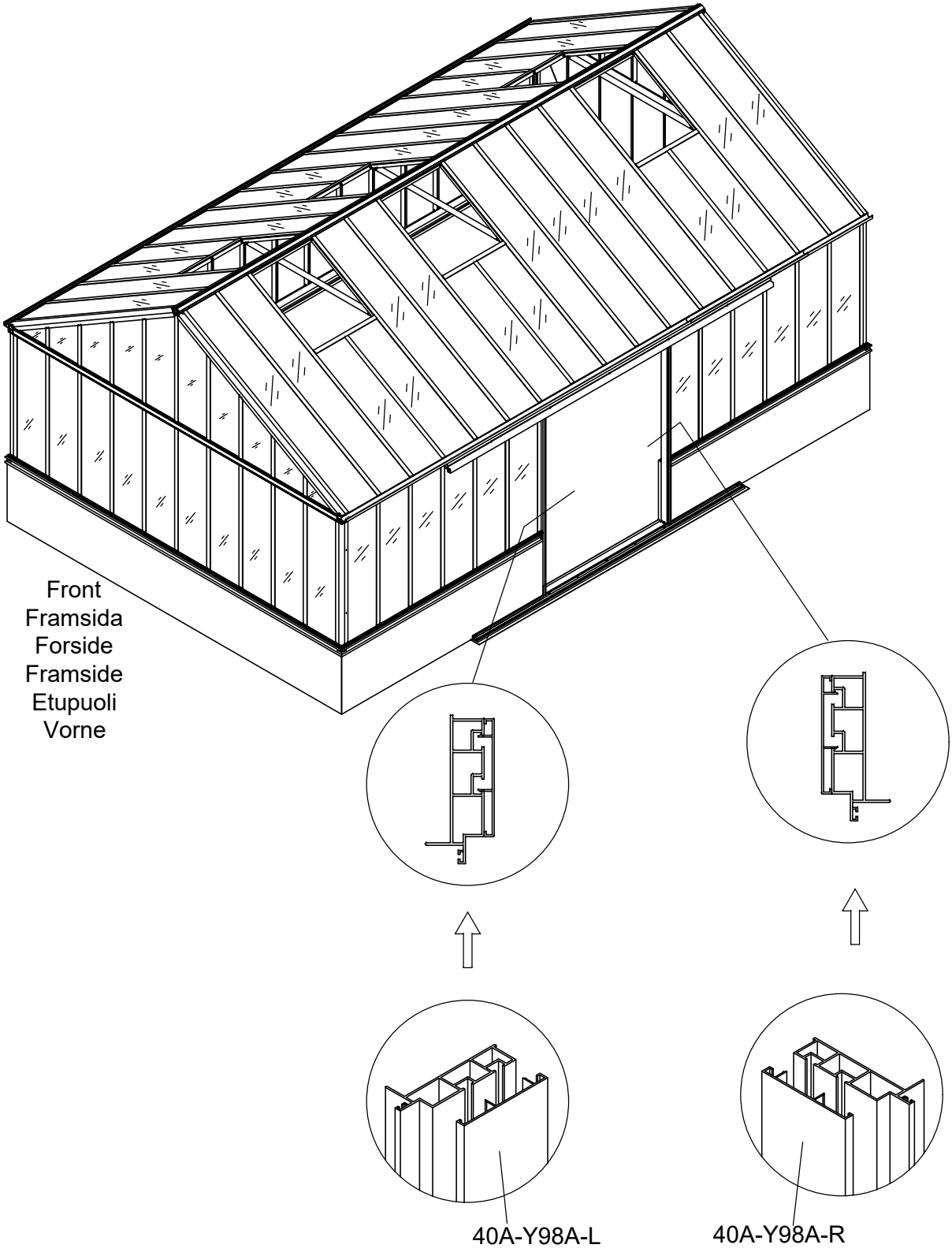

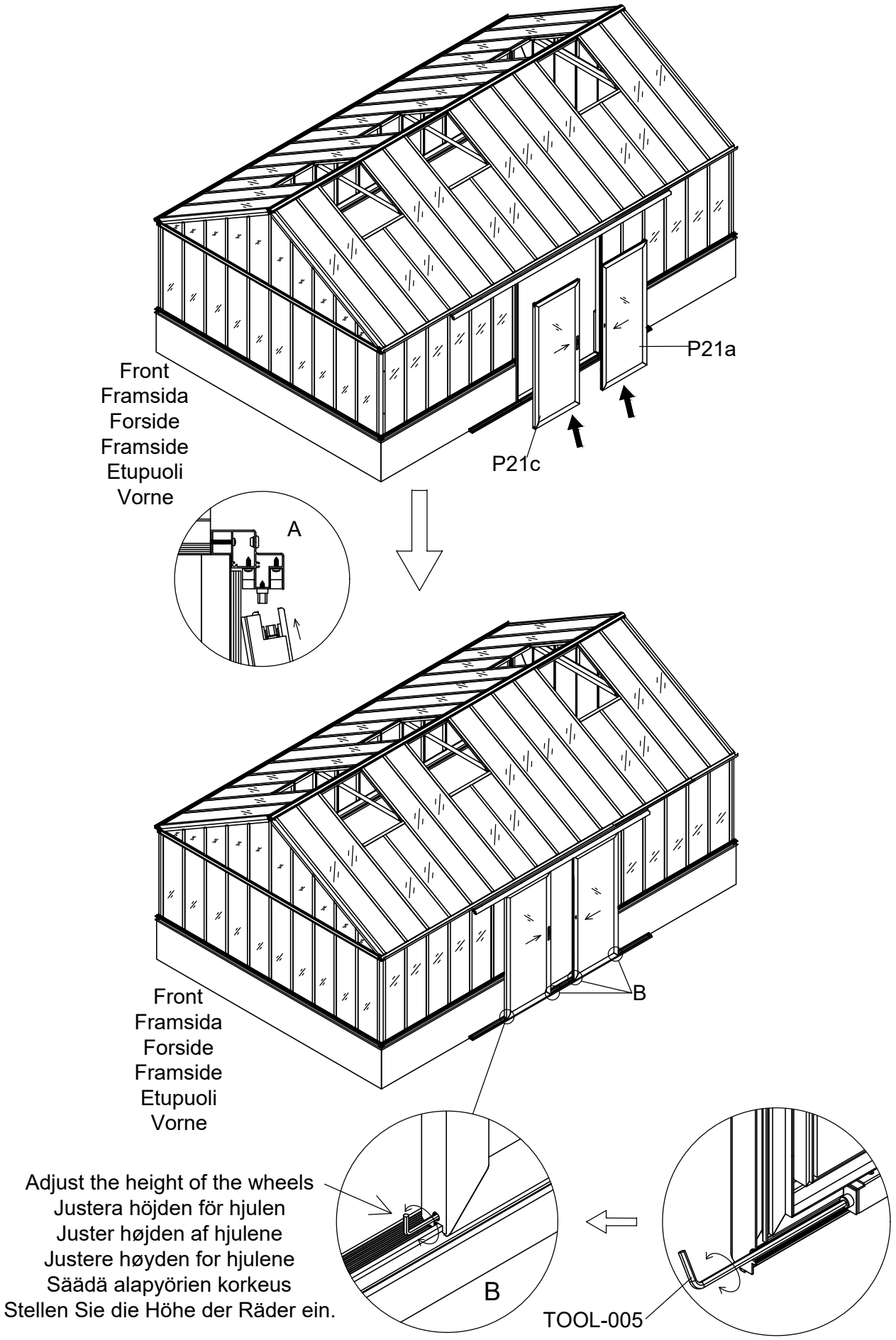
P21a
Front
Framsida
Forside
Framside
Etupuoli
Vorne
P21c
A
Front
Framsida
Forside
Framside
Etupuoli
Vorne
B
Adjust the height of the wheels
Justera höjden för hjulen
Juster højden af hjulene
Justere høyden for hjulene
Säädä alapyörien korkeus
Stellen Sie die Höhe der Räder ein.
B
TOOL-005

| Part | NO. | QTY. | Length(MM) |
|---|---|---|---|
| | T01N | 1 | PCS |
| | T01A | 1 | PCS |
| | J02 | 2 | PCS |
| | 7B26-039 | 2 | PCS |
| | 7B26-038 | 2 | PCS |
| | M4-40 | 2 | PCS |
| | Mi4-17 | 2 | PCS |
| | Z3.5-25 | 4 | PCS |
| | Z4.2-13 | 8 | PCS |

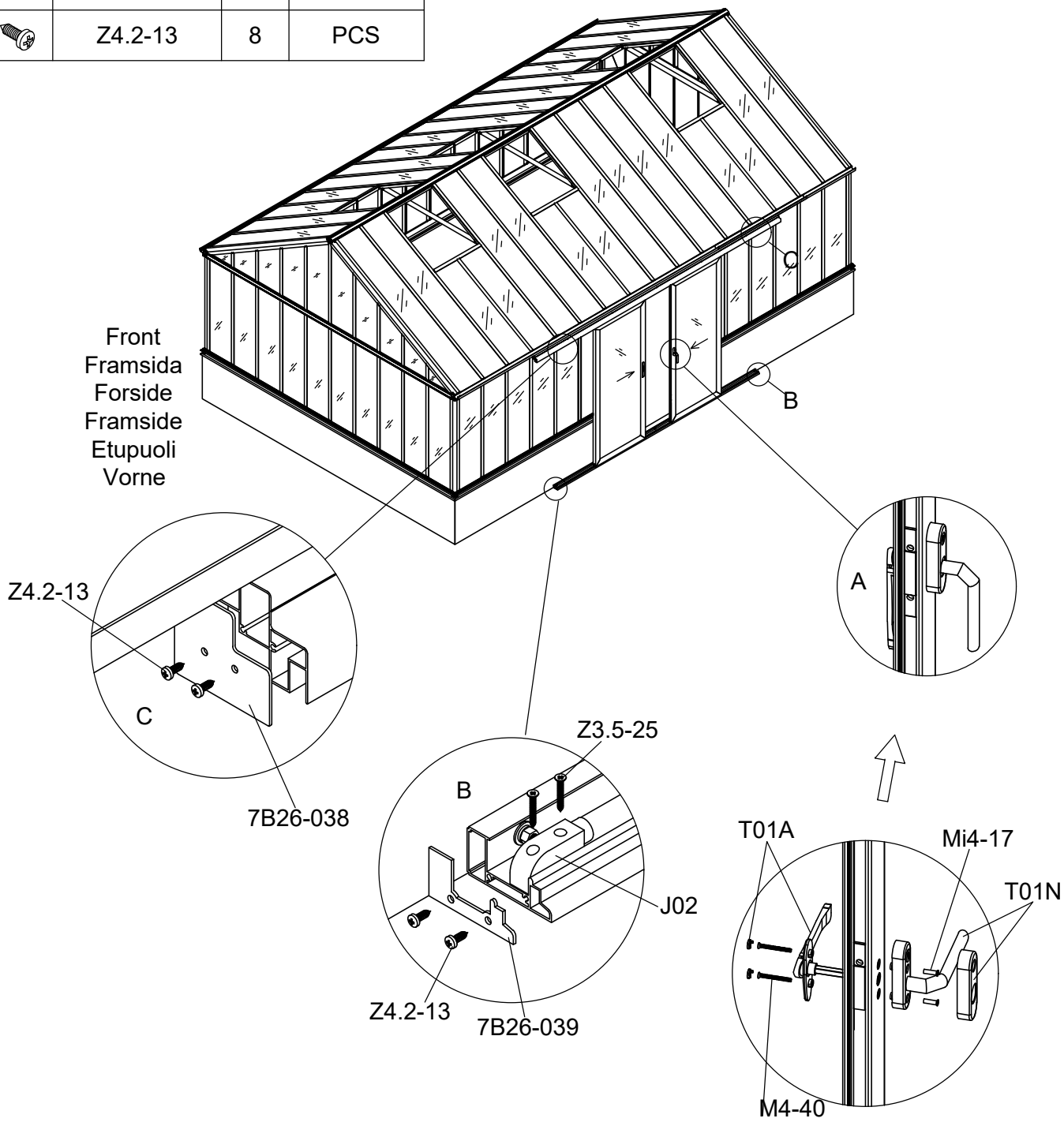

| Part | NO. | QTY. | | | | Length(MM) | CTN NO. |
|---|---|---|---|---|---|---|---|
| | | 3054 | 3055 | 3056 | 3057 | | |
| | 40X-Y80E-A | 4 | 4 | 6 | 6 | 801 | |
| | 40X-Y81E | 8 | 8 | 12 | 12 | 882 | |
| | W06 | 16 | 16 | 24 | 24 | 46 | |
| | W04 | 16 | 16 | 24 | 24 | PCS | |
| | 782×863 | 4 | 4 | 6 | 6 | 863 | |
| | MCJT002 | 8 | 8 | 12 | 12 | 12 | |
| | 40X-Y82E-A | 4 | 4 | 4 | 4 | 801 | 3149P-S |
| | 40X-Y82E-A | 0 | 0 | 2 | 2 | 801 | 3149P-S-2 |

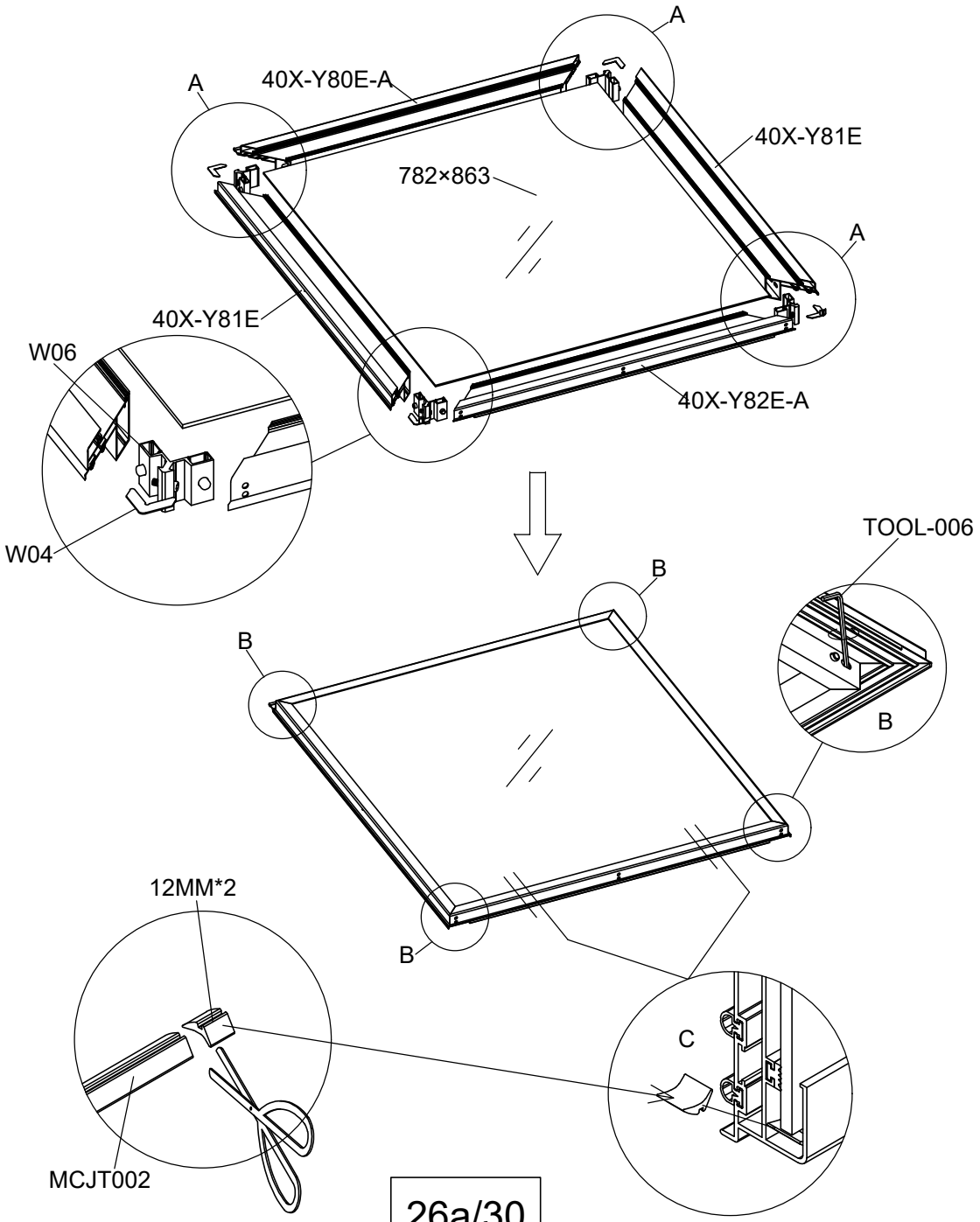

| Part | NO. | QTY. | | | | Length(MM) |
|---|---|---|---|---|---|---|
| | | 3054 | 3055 | 3056 | 3057 | |
| | MCJT002 | 14M | 14M | 21M | 21M | |
| | J09 | 32 | 32 | 48 | 48 | PCS |

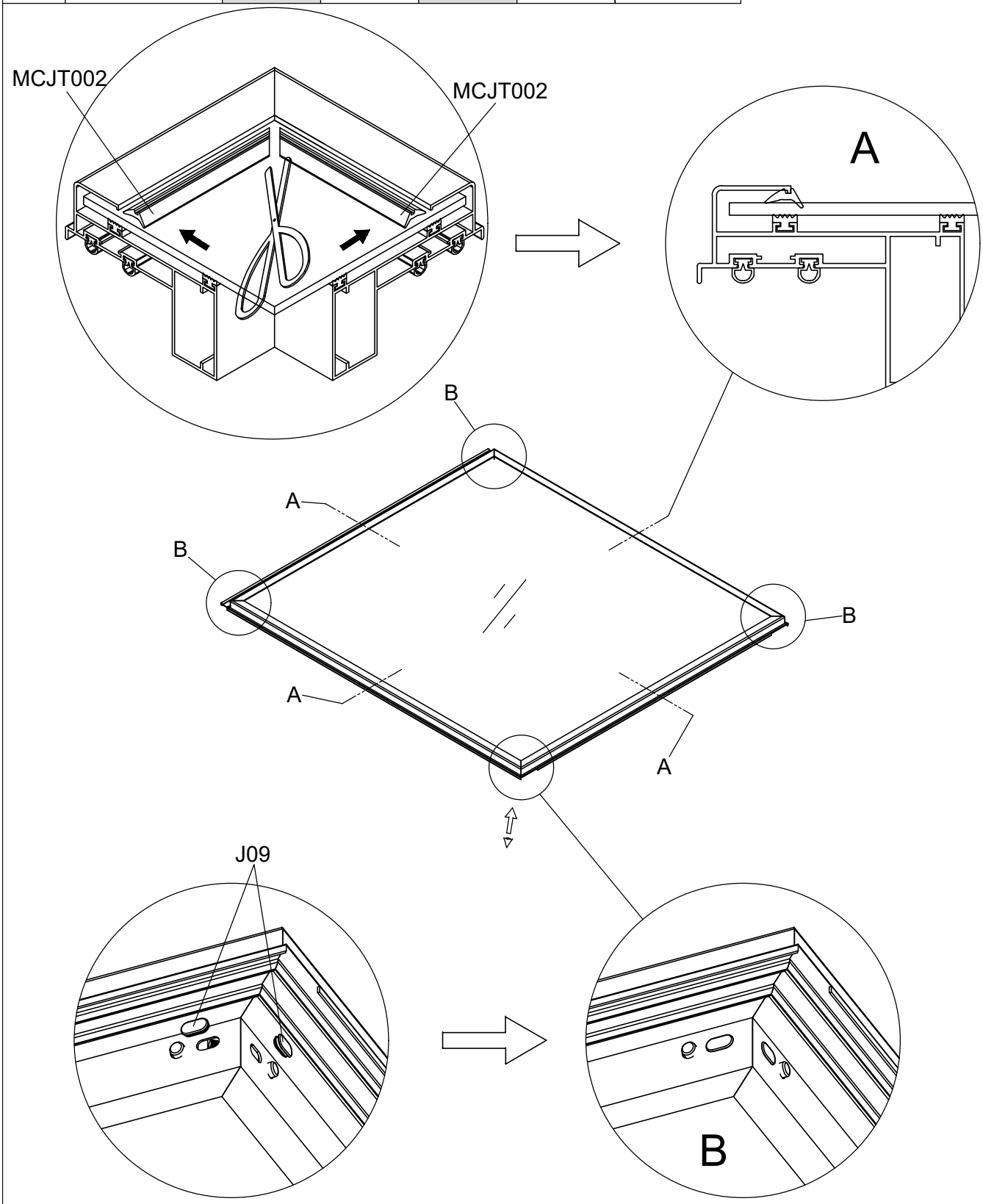

| Part | NO. | QTY. | | | | Length(MM) |
|---|---|---|---|---|---|---|
| | | 3054 | 3055 | 3056 | 3057 | |
| | T07 | 8 | 8 | 8 | 8 | PCS |

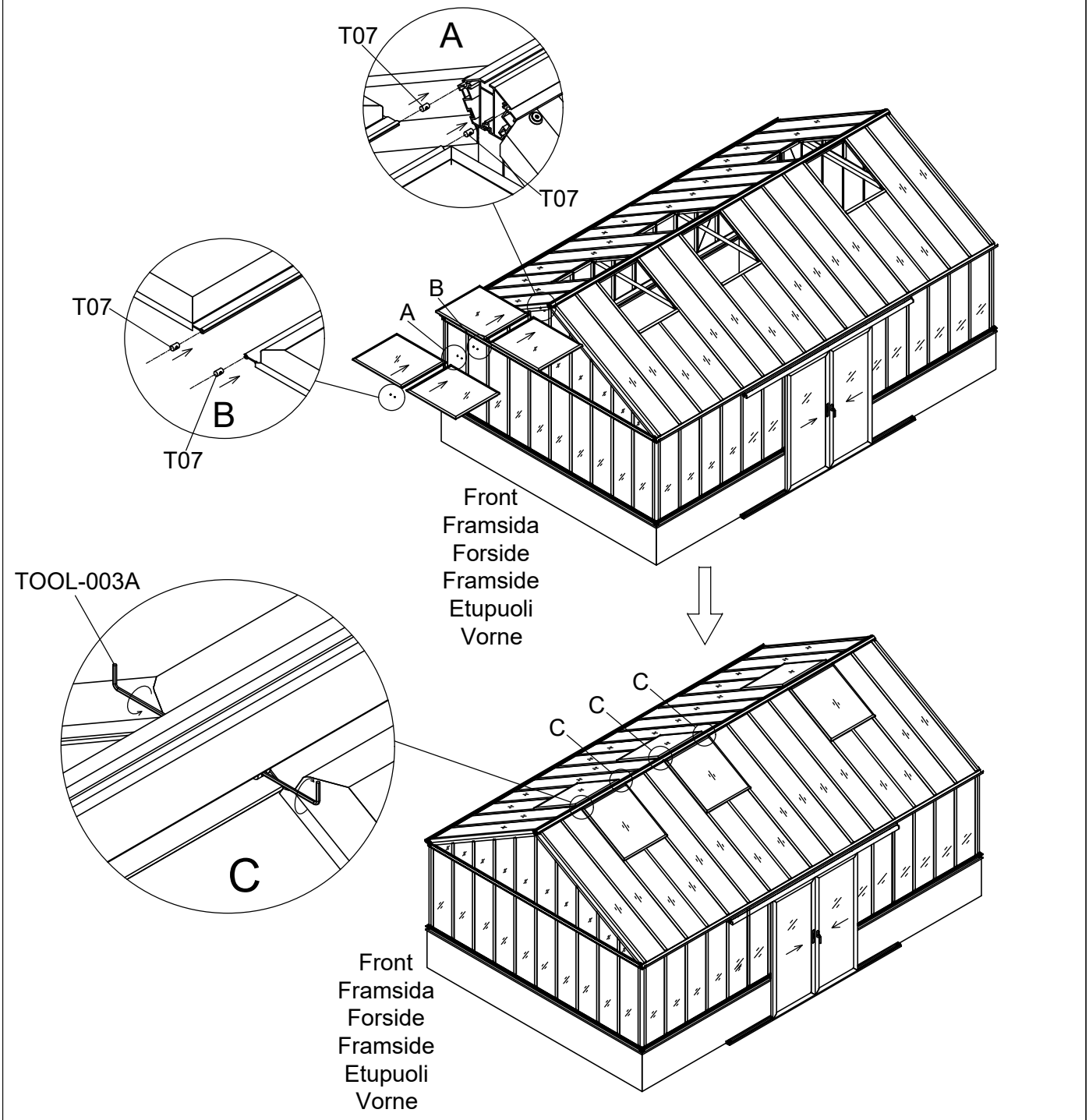


| 3054 | 3055 | 3056 | 3057 |
|---|---|---|---|
| 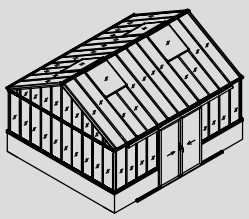 | 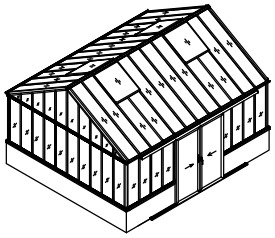 | 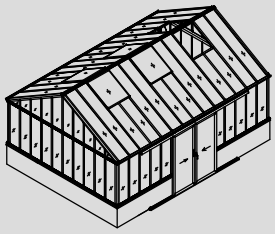 | 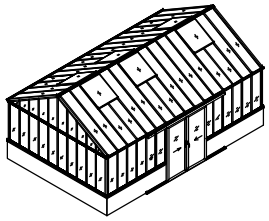 |

| Part | NO. | QTY. | | Length(MM) |
|---|---|---|---|---|
| | | 3056 | 3057 | |
| | T07 | 4 | 4 | PCS |

| | |
|---|---|
| 3056 | 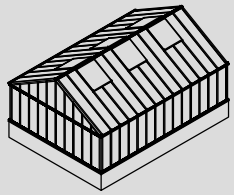 |
| 3057 | 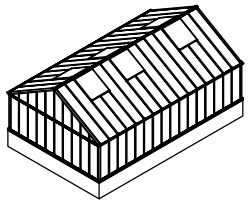 |

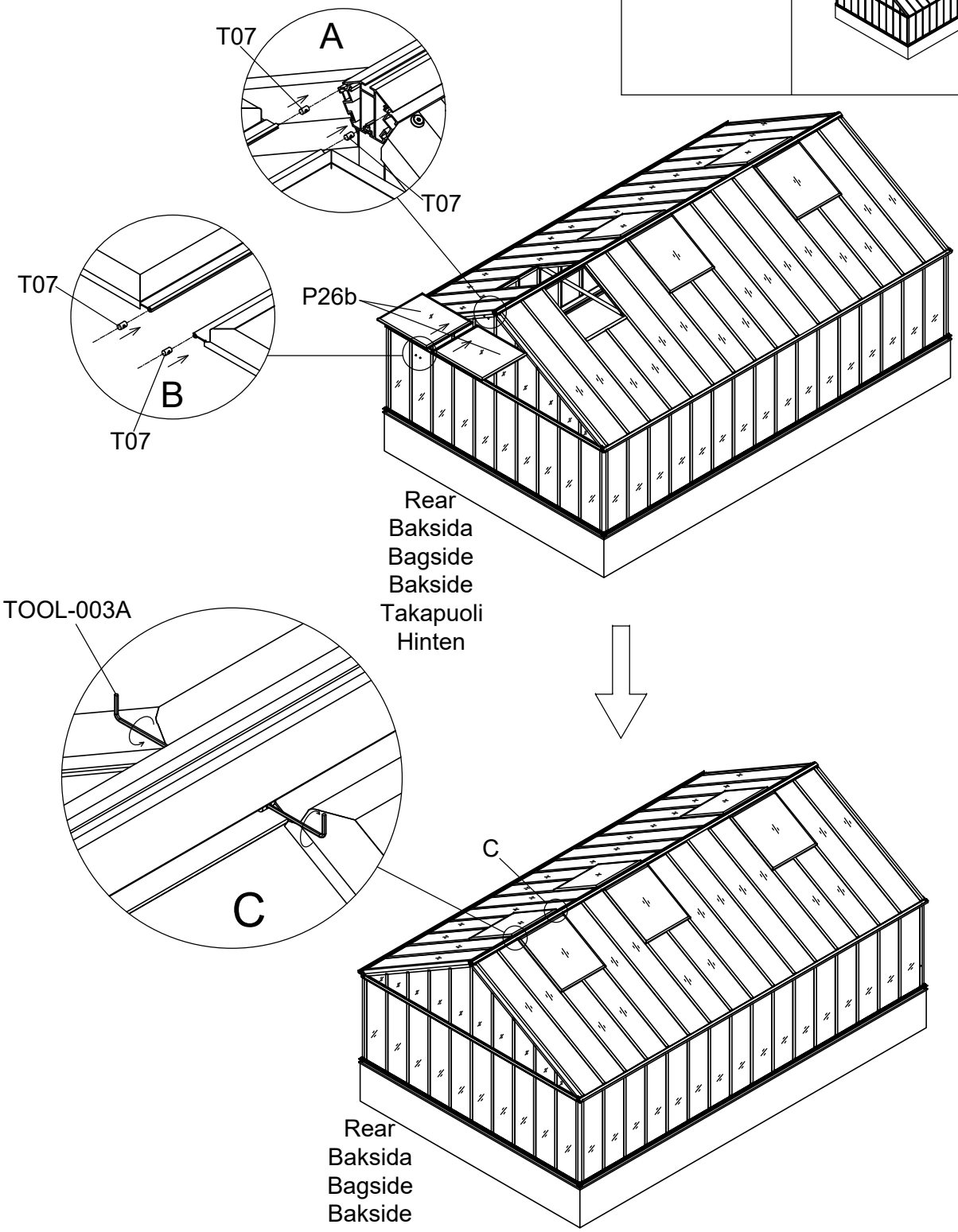

| Part | NO. | QTY. | Length(MM) |
|---|---|---|---|
| | 7C33-S02 | 2 | PCS |

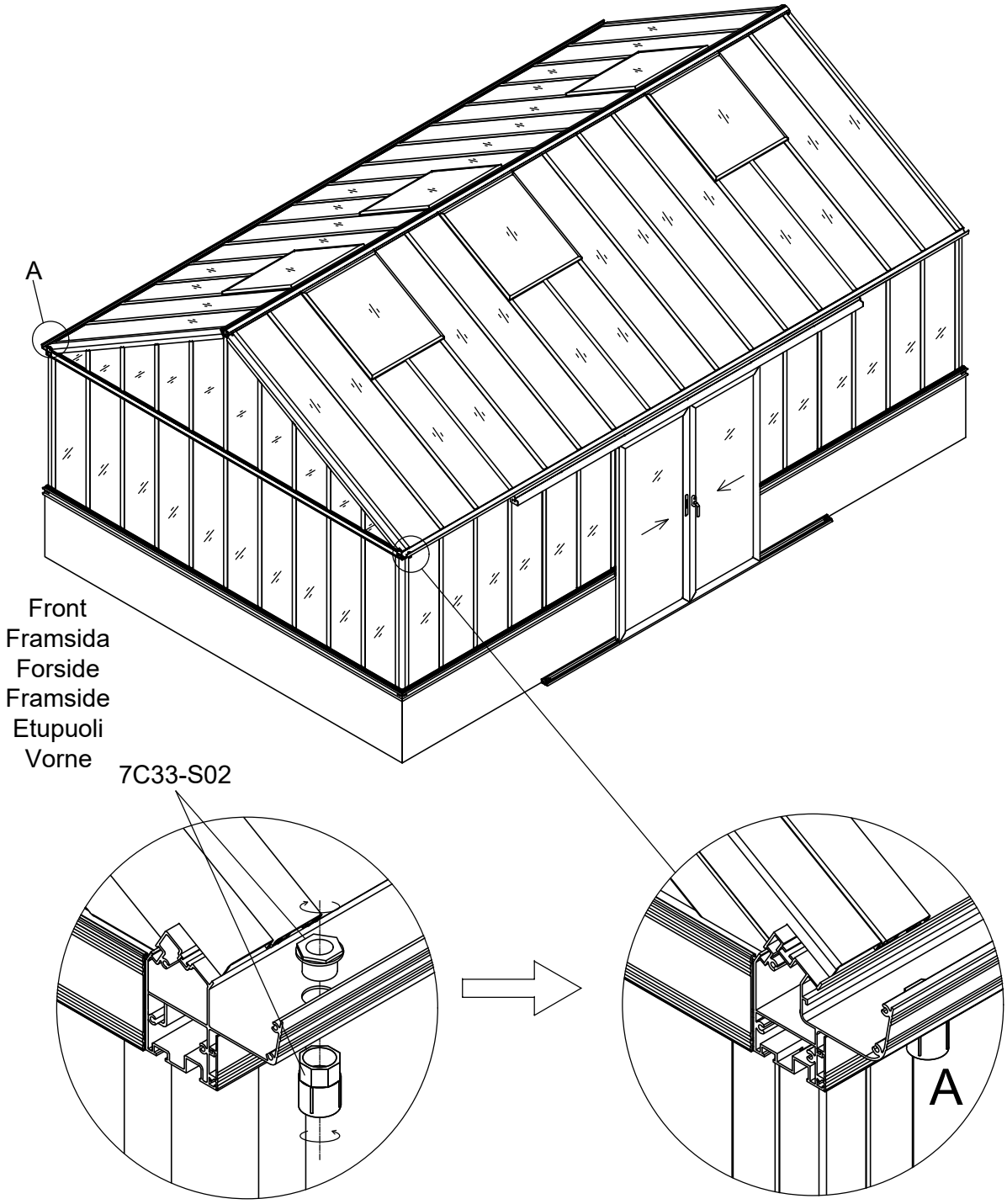

| Part | NO. | QTY. | Length(MM) |
|---|---|---|---|
| | 7C26-S01A | 2 | 1900 |
| | 7C33-S03 | 4 | PCS |
| | Z4.8-25 | 4 | PCS |
| | 7C33-S04 | 2 | PCS |
| | J07-A | 2 | PCS |
| | J07-B | 2 | PCS |

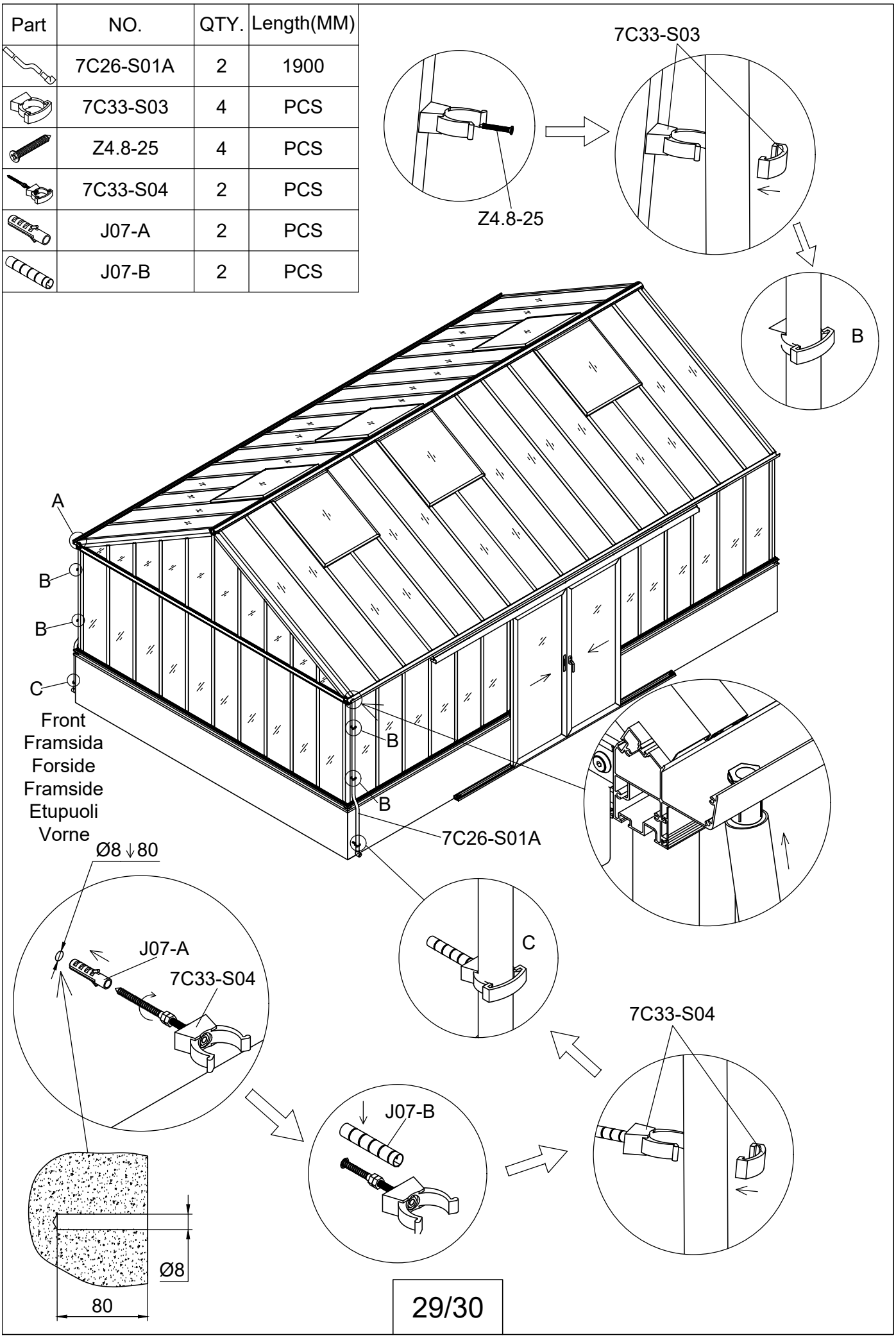

| Part | NO. | QTY. | Length(MM) |
|---|---|---|---|
| | 7B26-009C | 2 | PCS |
| | T10 | 4 | PCS |
| | T10A | 4 | PCS |
| | Za4.2-13 | 6 | PCS |
| | Z4.2-13 | 20 | PCS |

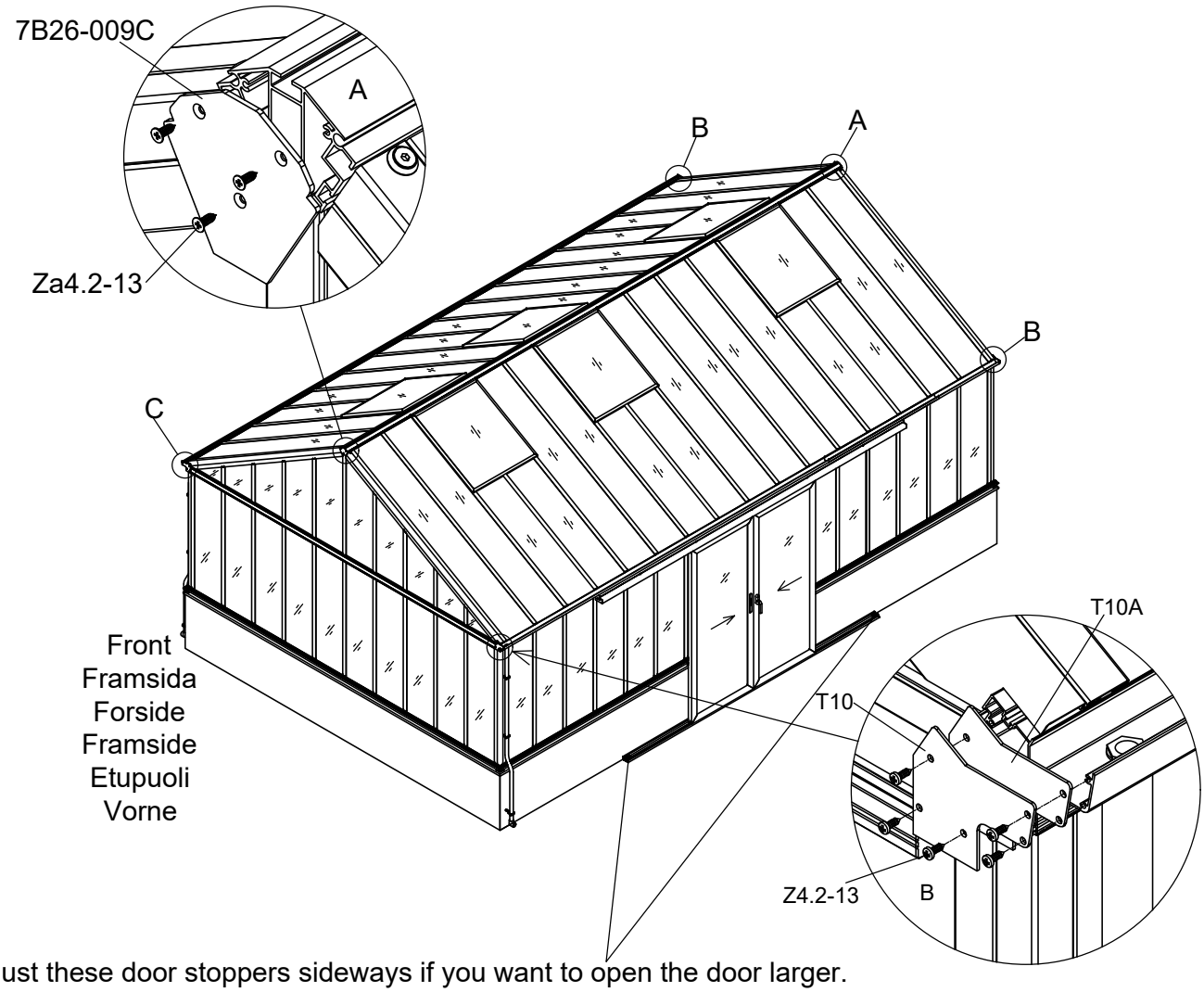


Adjust these door stoppers sideways if you want to open the door larger.
Justera avstånden av dörrstoppen i sidled om ni vill kunna öppna dörrarna ännu mer.
Justere dørstoppene sidelæns, for at give større åbning af døren.
Juster avstanden av dørstopperen sideveis om du vil kunne åpne døren ennå mer.
Säädä liukuovien stoppareiden etäisyys sivusuunnassa, mikäli haluat ovien avautuvan enemmän.
Stellen Sie den Türstopper seitlich ein, wenn Sie die Tür größer öffnen möchten.

| 3054 | 3055 | 3056 | 3057 |
|---|---|---|---|
| 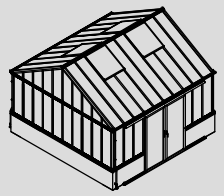 | 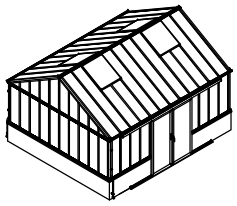 | 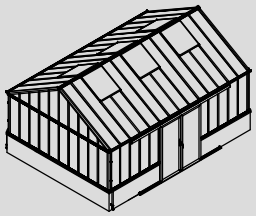 | 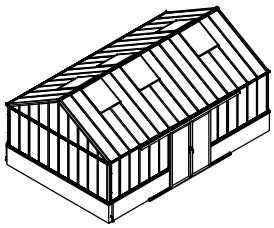 |

| Part | Product | NO. | Length(MM) | CTN NO. | Code |
|---|---|---|---|---|---|
| | 3054 | 40A-Y11-5 | 3924 | 3043P-S-BASE5 | A001 |
| | 3055 | 40A-Y11-6 | 4675 | 3043P-S-BASE6 | |
| | 3056 | 40A-Y11-7 | 5426 | 3043P-S-BASE7 | |
| | 3057 | 40A-Y11-8 | 6177 | 3043P-S-BASE8 | |
| | 3054 | 50A-Y13R | 1230 | 3043PA-S-5 | A008 |
| | 3055 | 40A-S11-6R | 1605 | 3043PA-S-6 | |
| | 3056 | 40A-S11-7R | 1981 | 3043PA-S-7 | |
| | 3057 | 40A-S11-8R | 2356 | 3043PA-S-8 | |
| | 3054 | 50A-Y13L | 1230 | 3043PA-S-5 | A009 |
| | 3055 | 40A-S11-6L | 1605 | 3043PA-S-6 | |
| | 3056 | 40A-S11-7L | 1981 | 3043PA-S-7 | |
| | 3057 | 40A-S11-8L | 2356 | 3043PA-S-8 | |

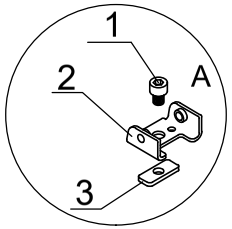


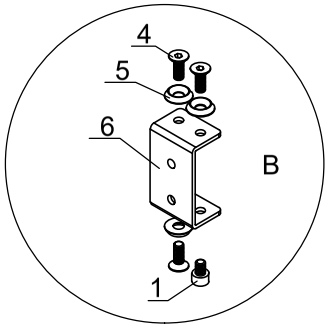


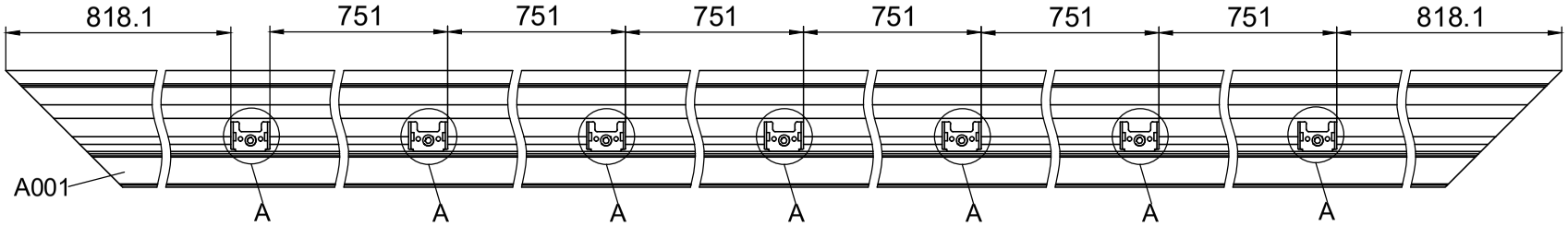


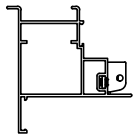

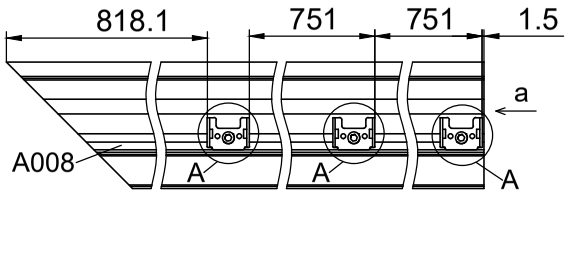


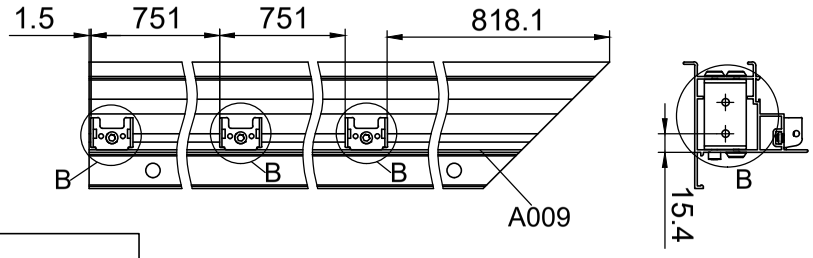


F1

| NO. | |
|---|---|
| 1 | M6-8 |
| 2 | 7B26-011 |
| 3 | 7B26-025 |
| 4 | Si6-16 |
| 5 | J05 |
| 6 | 7B26-037A |

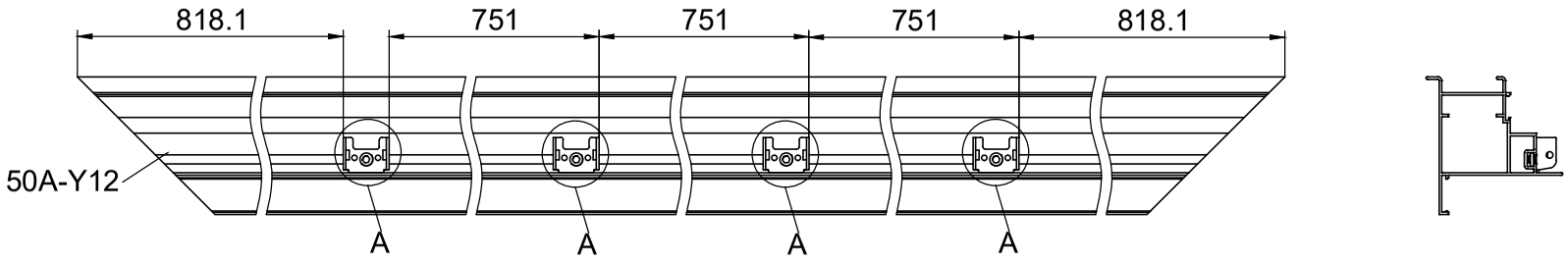


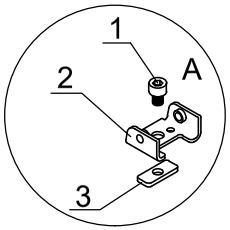


F2

| NO. | |
|---|---|
| 1 | M6-8 |
| 2 | 7B26-011 |
| 3 | 7B26-025 |

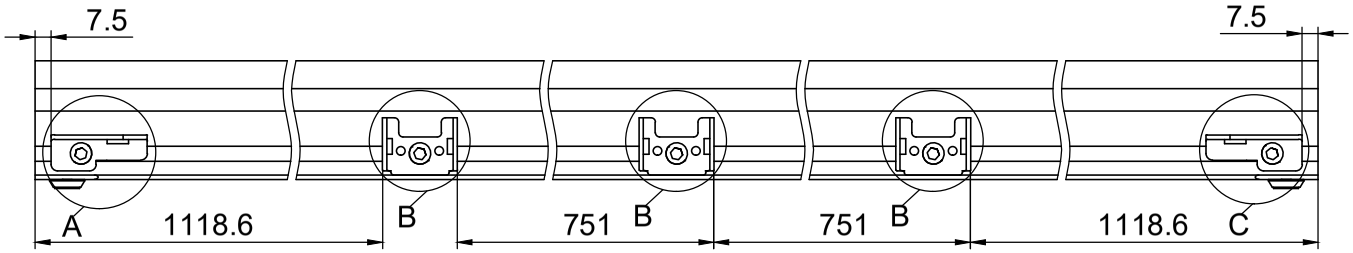


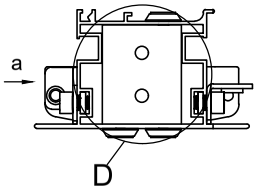


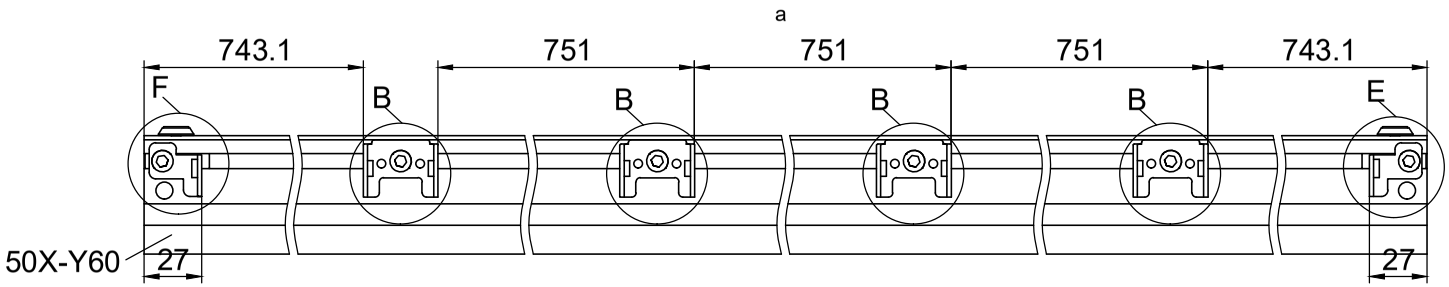


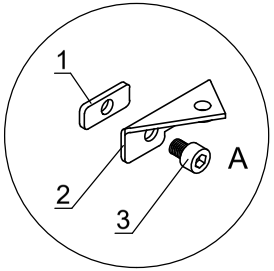


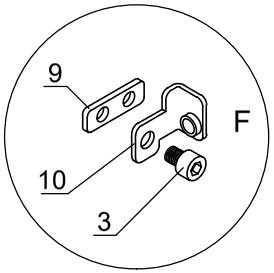


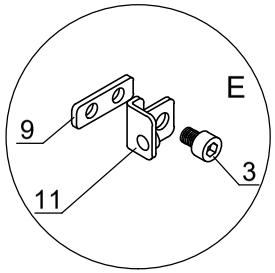


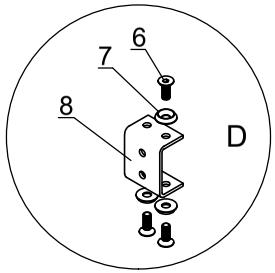


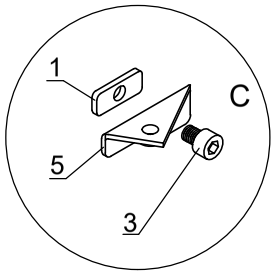


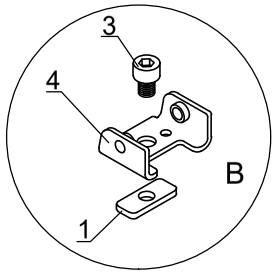


| NO. | |
|---|---|
| 1 | 7B26-025 |
| 2 | 7B26-030 |
| 3 | M6-8 |
| 4 | 7B26-011 |
| 5 | 7B26-031 |
| 6 | Si6-16 |
| 7 | J05 |
| 8 | 7B26-028 |
| 9 | 7B26-033 |
| 10 | 7B26-027 |
| 11 | 7B26-026 |

F3

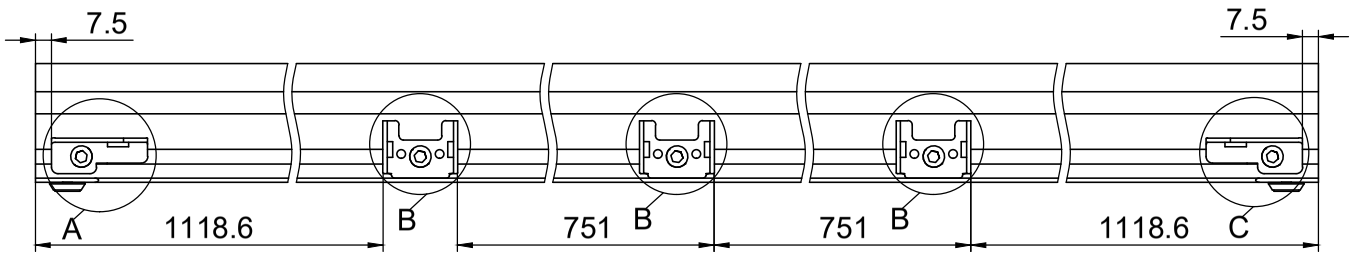


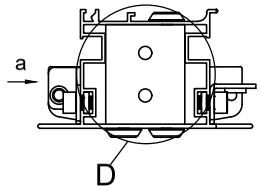


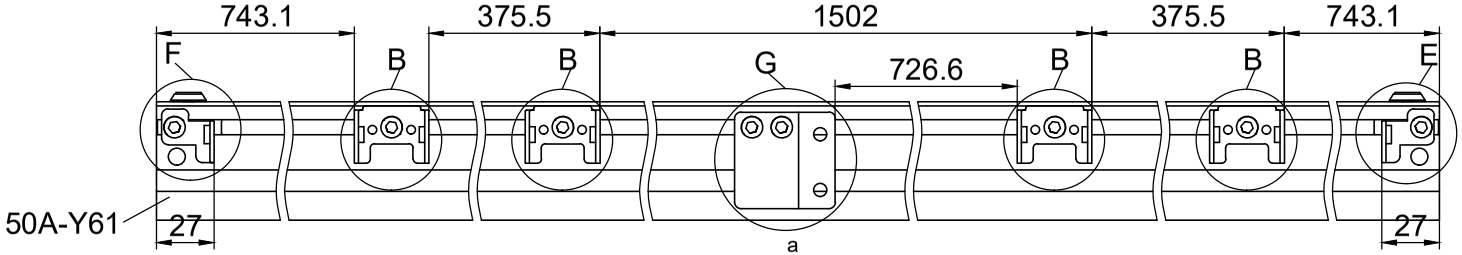


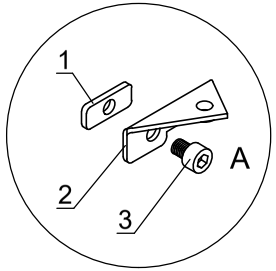


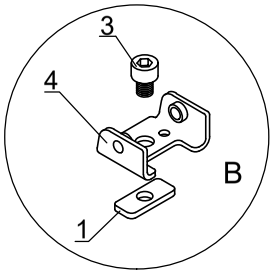


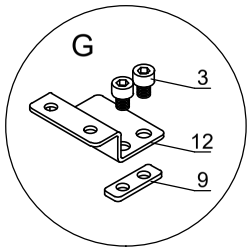


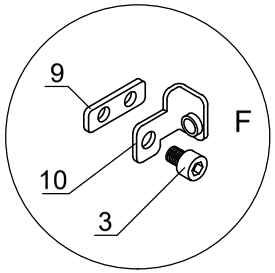


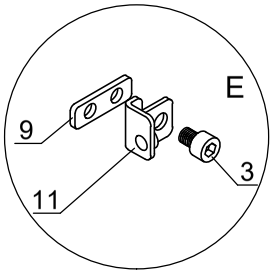


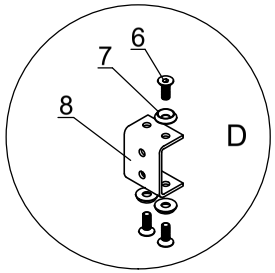


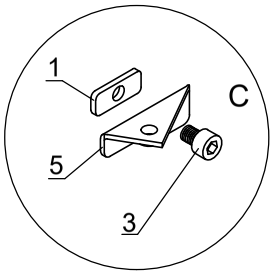


| NO. | |
|---|---|
| 1 | 7B26-025 |
| 2 | 7B26-030 |
| 3 | M6-8 |
| 4 | 7B26-011 |
| 5 | 7B26-031 |
| 6 | Si6-16 |
| 7 | J05 |
| 8 | 7B26-028 |
| 9 | 7B26-033 |
| 10 | 7B26-027 |
| 11 | 7B26-026 |
| 12 | 7B26-036 |

F4

| Part | Product | NO. | Length(MM) | Code |
|---|---|---|---|---|
| | 3054 | 40X-Y62-5NR | 3883 | A003 |
| | 3055 | 40X-Y62-6NR | 4634 | |
| | 3056 | 40X-Y62-7NR | 5385 | |
| | 3057 | 40X-Y62-8NR | 6136 | |

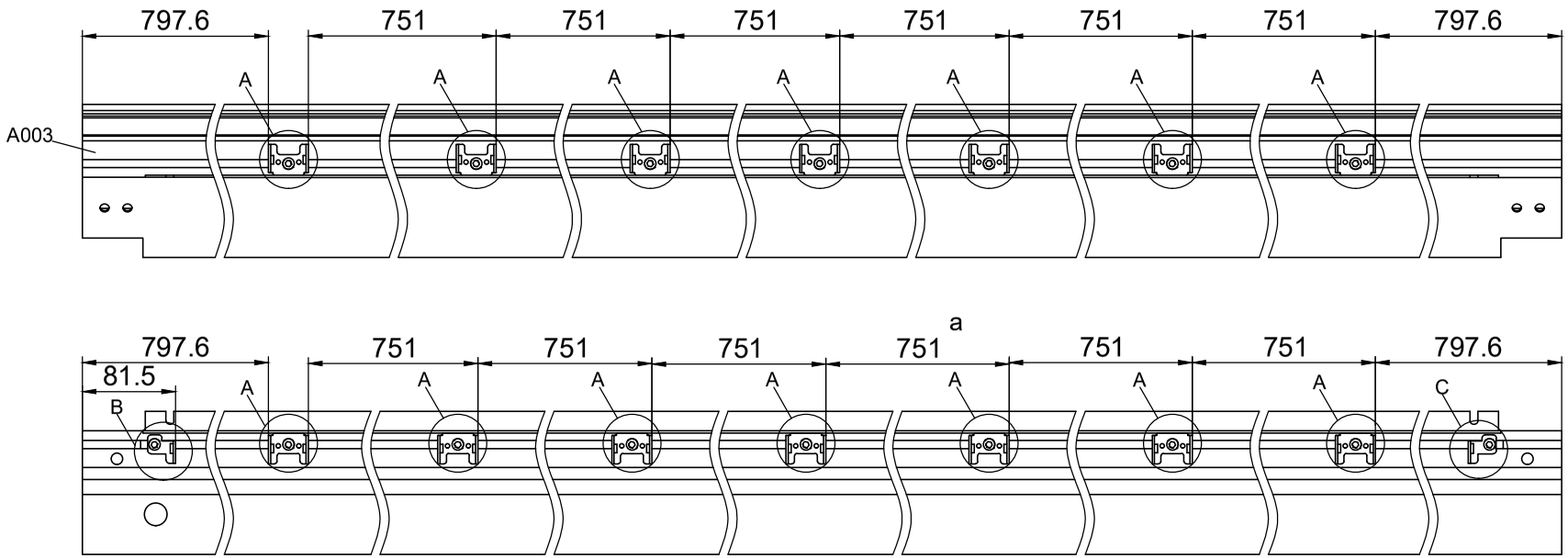


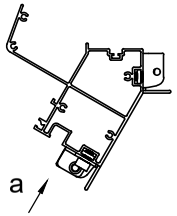


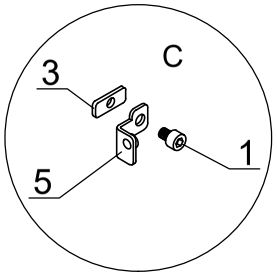


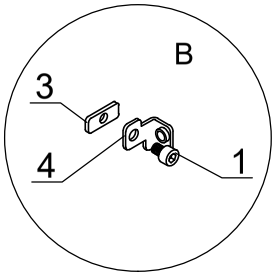


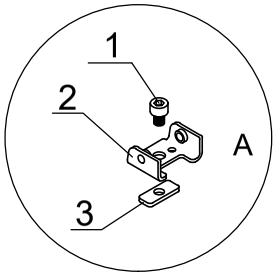


F5

| NO. | |
|---|---|
| 1 | M6-8 |
| 2 | 7B26-011 |
| 3 | 7B26-025 |
| 4 | 7B26-027 |
| 5 | 7B26-026 |

| Part | Product | NO. | Length(MM) | Code |
|---|---|---|---|---|
| | 3054 | 40A-Y62-5NL | 3883 | A004 |
| | 3055 | 40A-Y62-6NL | 4634 | |
| | 3056 | 40A-Y62-7NL | 5385 | |
| | 3057 | 40A-Y62-8NL | 6136 | |

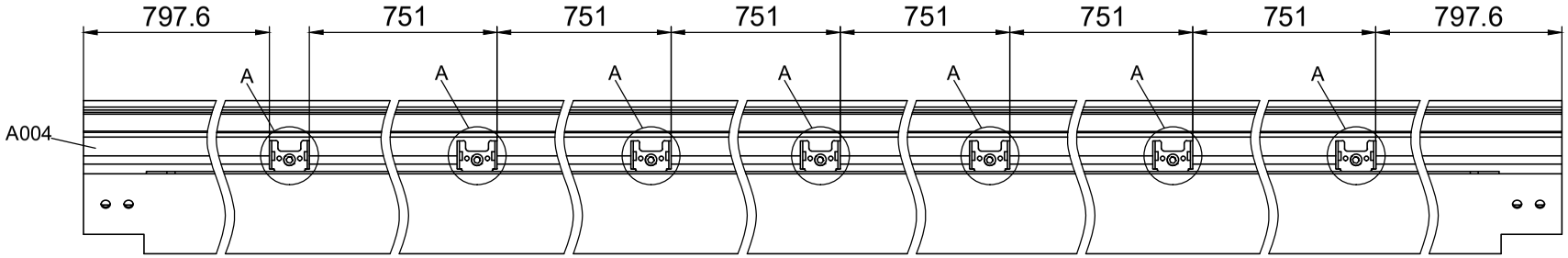


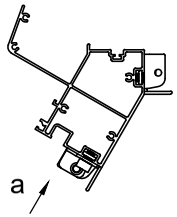


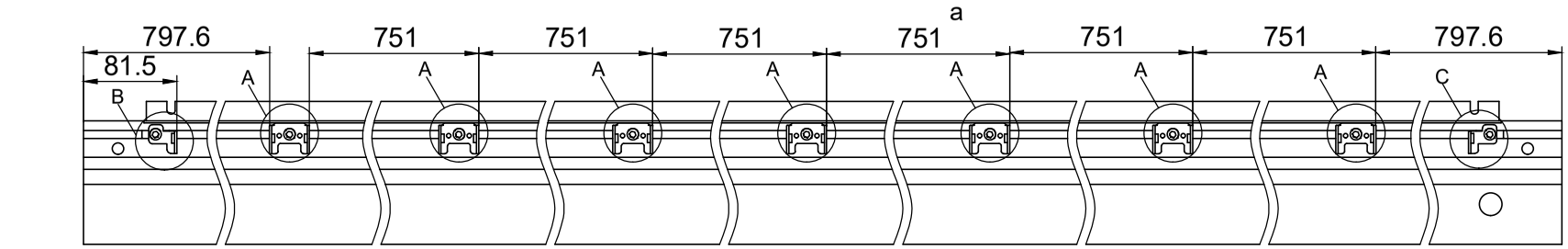


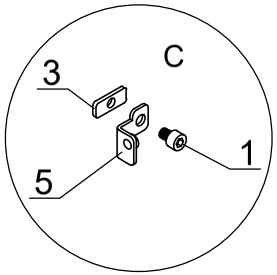


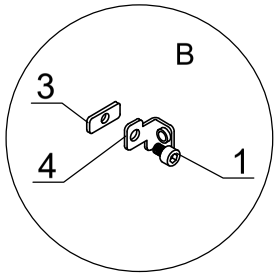


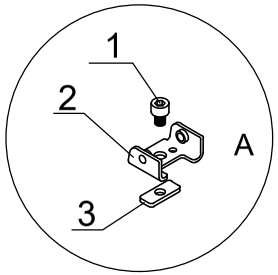


F6

| NO. | |
|---|---|
| 1 | M6-8 |
| 2 | 7B26-011 |
| 3 | 7B26-025 |
| 4 | 7B26-027 |
| 5 | 7B26-026 |

| Part | Product | NO. | Length(MM) | Code |
|---|---|---|---|---|
| | 3054 | 40X-Y63-5 | 3869 | A005 |
| | 3055 | 40X-Y63-6 | 4620 | |
| | 3056 | 40X-Y63-7 | 5371 | |
| | 3057 | 40X-Y63-8 | 6122 | |

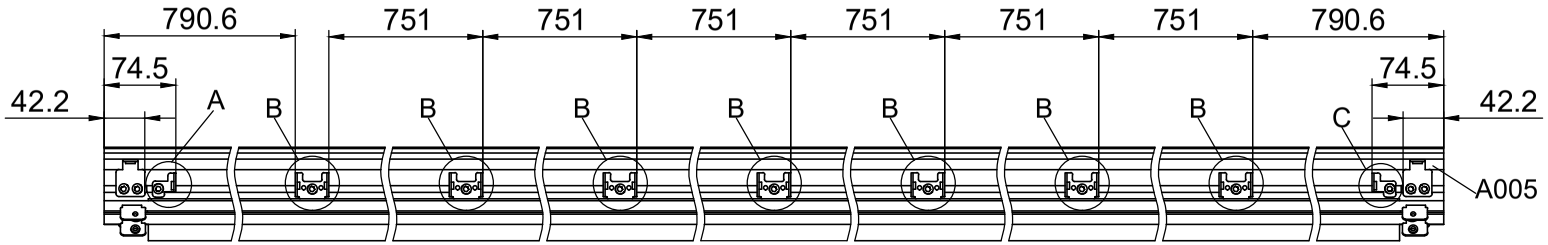


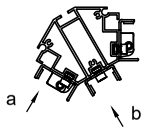


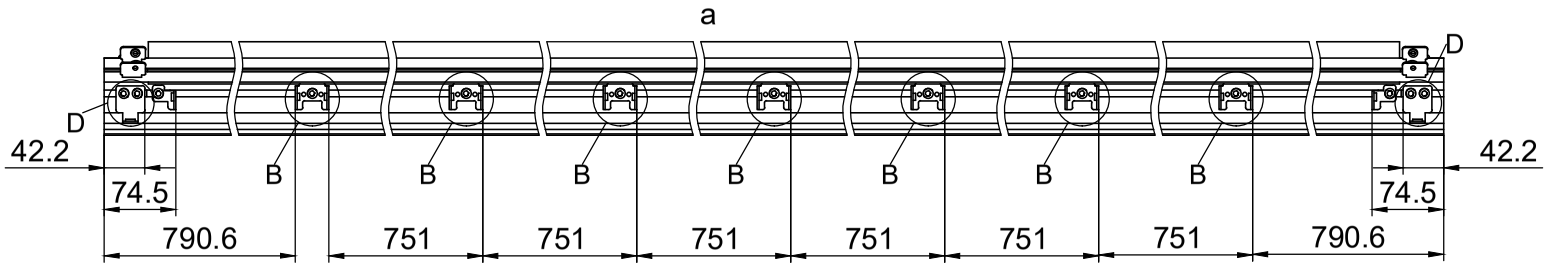


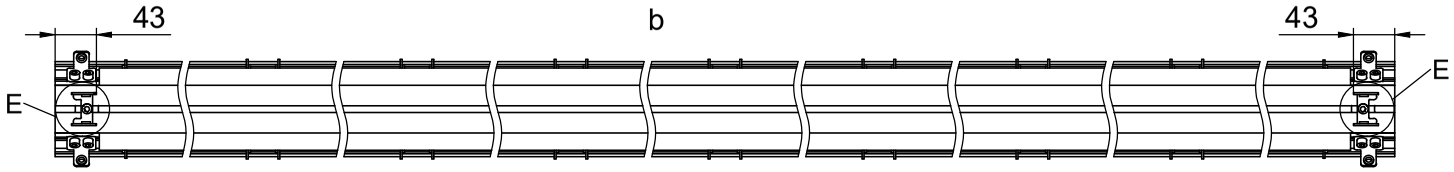


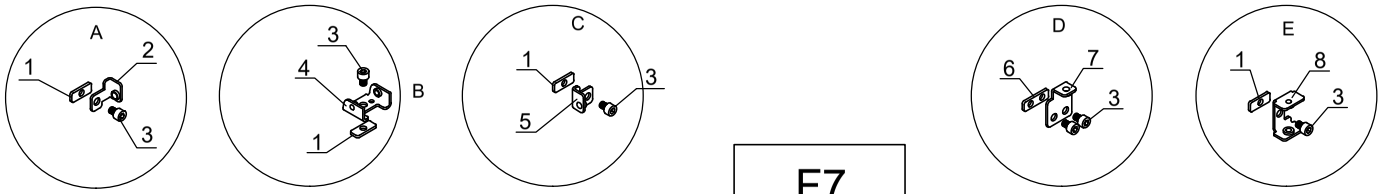


F7

| NO. | |
|---|---|
| 1 | 7B26-025 |
| 2 | 7B26-026 |
| 3 | M6-8 |
| 4 | 7B26-011 |
| 5 | 7B26-027 |
| 6 | 7B26-033 |
| 7 | 7B26-032 |
| 8 | 7B26-034 |

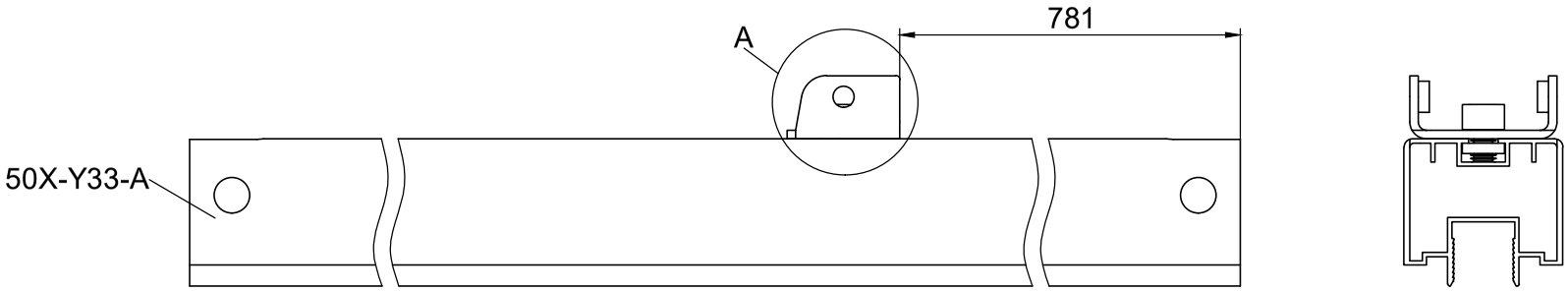


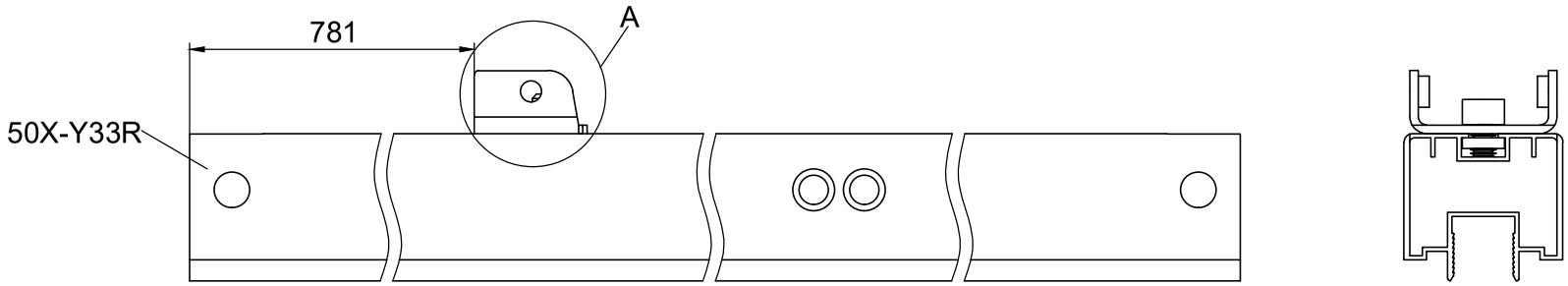


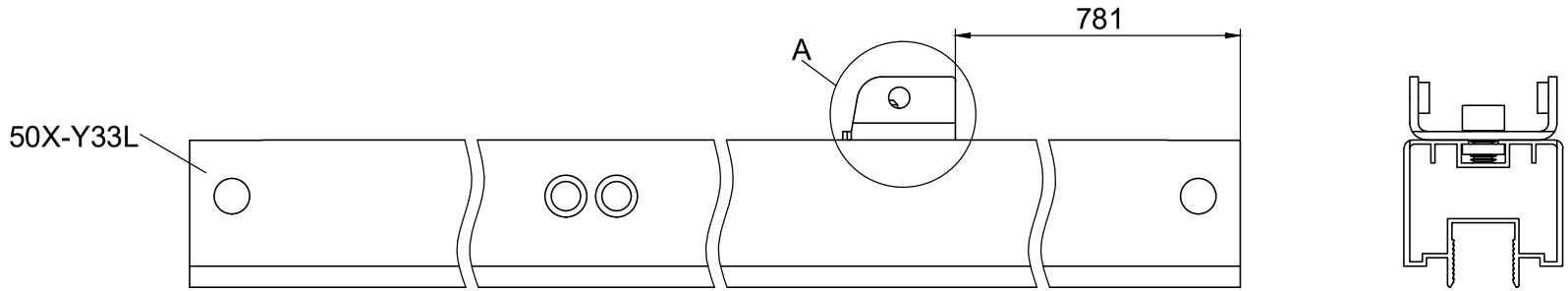


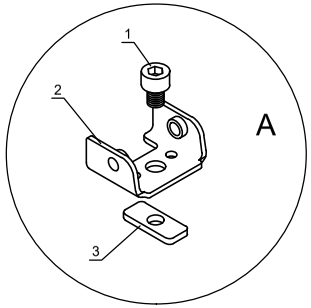


| NO. | |
|---|---|
| 1 | M6-20 |
| 2 | 7B26-011 |
| 3 | 7B26-025 |

F8

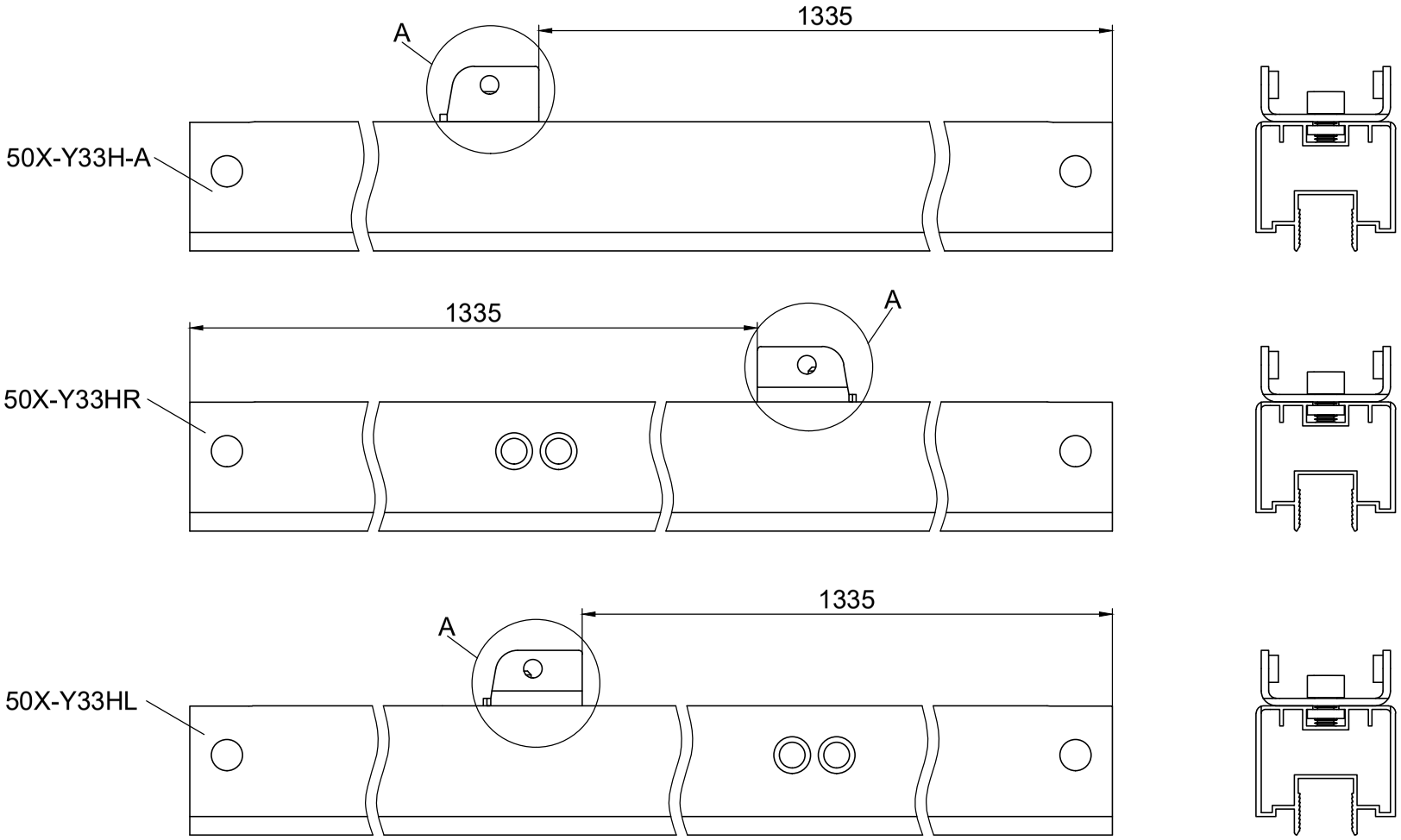


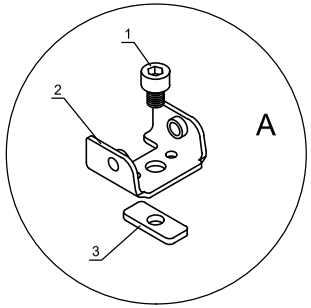


| NO. | |
|---|---|
| 1 | M6-20 |
| 2 | 7B26-011 |
| 3 | 7B26-025 |

F9