Green Room®

BY WILLAB GARDEN

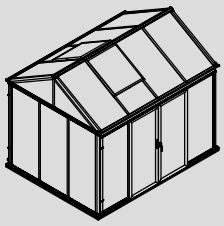	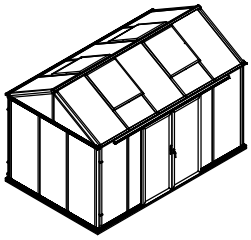	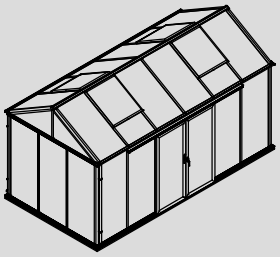
3002-FD&XDS	3003-FD&XDS	3004-FD&XDS
319×244×268cm	394×244×268cm	469×244×268cm

Product size (L×W×H):
Storlek (L×B×H):
Størrelse (L×B×H):
Størrelse (L×B×H):
Koko (P×L×K):
Produktgröße (L×B×H):

Please read carefully before assembling.
Two people are needed.

Läs noggrant innan montering.
Det krävs två personer för montering.

Læs venligst omhyggeligt, før montering.
Der kræves to personer til montering.

Les monteringsanvisningen nøye innen montering.
Det kreves to personer for montering.

Lue ohjeet huolellisesti läpi ennen asentamista.
Asentamiseen tarvitaan kaksi henkilöä.

Bitte vor dem Aufbau sorgfältig lesen.
Zwei Personen werden benötigt.

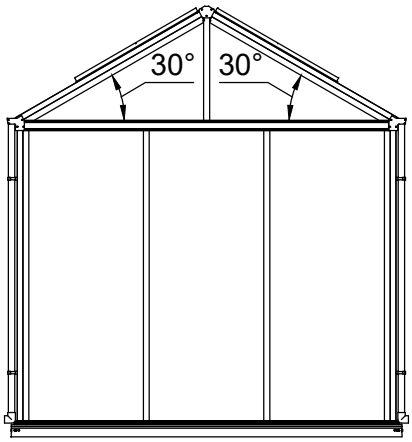

230329

Part	3002		3003		3004		QTY.	Code	Page
	NO.	Length(MM)	NO.	Length(MM)	NO.	Length(MM)			
	40X-Y11-4	3188	40X-Y11-5	3939	40X-Y11-6	4690	2	A001	P2
	40X-Y62-4NR	3132	40X-Y62-5NR	3883	40X-Y62-6NR	4634	1	A002	P4
	40X-Y62-4NL	3132	40X-Y62-5NL	3883	40X-Y62-6NL	4634	1	A003	P4
	40X-Y63-4	3118	40X-Y63-5	3869	40X-Y63-6	4620	1	A004	P6
	40X-Y14	3149	40X-Y15-5	3900	40X-Y15-6	4651	2	A005	P11

Part	NO.	QTY.			Length(MM)	Page
		3002	3003	3004		
	40X-Y30	10	12	14	1810	P5
	30X-Y33R	2	4	4	1282	P8
	30X-Y33L	2	4	4	1282	P8
	40X-Y34B	2	4	4	713	P8
	30X-Y33-A	2	0	2	1282	P8
	40X-Y35	3	4	5	1000	P9
	40X-Y01	14	18	18	1809	P11
	30X-Y06	10	12	14	1321	P15
	40X-Y07	2	4	4	712	P15
	40X-Y80E-A	2	4	4	801	P25
	40X-Y81E	4	8	8	882	P25
	40X-Y82E	2	4	4	801	P25

Part	NO.	QTY.	Length(MM)	Page
	40X-Y11-3	2	2437	P2
	40X-Y20	4	1811	P3
	30X-Y60	2	2272	P4
	30X-Y32	2	642	P6
	30X-Y21	2	1321	P7
	30X-Y22	2	1321	P7
	40X-Y15-3	2	2398	P11
	40X-Y02	2	1809	P11
	30X-Y03	1	642	P13~14
	30X-Y05R	1	1281	P13~14
	30X-Y05L	1	1281	P13~14
	30X-Y60-AN	2	2272	P17

Part	NO.	QTY.	Length(MM)	Page

Part	NO.	QTY.			Length(MM)	Page
		3002	3003	3004		
	Si6-16	104	124	144	PCS	P3~9
	J05	108	128	148	PCS	P3~9
	Si5-16	8	16	16	PCS	P8
	J01	8	16	16	PCS	P8
	W04	16	24	24	PCS	P18~25
	W06	8	16	16	46	P25
	J09	16	32	32	PCS	P26
	T07	4	8	8	PCS	P27
	7C26-007N	18.5M	20M	21.5M		P12~16
	7C26-009A	5M	5M	6.5M		P16
	MCJT002	15M	22M	22M		P19~26

Part	NO.	QTY.	Length(MM)	Page
	7B26-025	8	PCS	P2
	S6-12	20	PCS	P2
	W01	4	69	P2
	M6	20	PCS	P2
	7B26-017	4	PCS	P3
	M6-8	24	PCS	P3~7
	7B26-029	4	PCS	P4
	M6-20	8	PCS	P4
	7B26-033	4	PCS	P7
	Si6-12	4	PCS	P7
	W03	4	30	P18
	Z4.2-13	40	PCS	P20~30
	7C28-004	6	PCS	P21~22
	Z4.2-50	6	PCS	P21~22
	T08	2	PCS	P21
	T01	1	PCS	P24
	T01A	1	PCS	P24
	J02	1	PCS	P24
	M4-40	2	PCS	P24
	Mi4-17	2	PCS	P24
	Z3.5-25	6	PCS	P24
	T04	2	PCS	P24
	7C33-S02	2	PCS	P28
	7C33-S03	4	PCS	P29
	Z4.8-25	4	PCS	P29
	T09	2	PCS	P30
	T10	4	PCS	P30
	T10A	4	PCS	P30

Part	NO.	QTY.	Length(MM)	Page
	7B26-014	6	500	P2
	L05	8	1920	P4
	L18	4	1450	P7
	NSST120	1.9M		P24
	7C26-S01	2	1864	P29
	TOOL-001	1	274	P2~30
	TOOL-002	1	80	P2~30
	TOOL-003A	1	2MM	P5~25
	TOOL-004A	1	3MM	P26
	TOOL-005	1	4MM	P3~18
	TOOL-006	1	5MM	P2~17

3010P-DD									
Part	NO.	QTY.	Length(MM)	Page	Part	NO.	QTY.	Length(MM)	Page
	40X-Y90	2	1805	P18		W03	8	30	P18
	40X-Y91R	1	1805	P18		W04	16	11.6	P18
	40X-Y91L	1	1805	P18		Z4.2-13	18	13	P21~24
	40X-Y92R	1	767	P18		T04	2	79	P21
	40X-Y92L	1	767	P18		Z4.2-38	3	18	P21
	40X-Y93	2	767	P18		Z3.5-25	8	25	P21~24
	40X-Y95	4	1704	P19		7C28-004	5	9	P22
	40X-Y96	4	666	P19		Z4.2-50	5	50	P22
	NS1106A	2	1790	P21		T01	1	Pcs	P24
	40X-Y97R-C	1	1799	P21		T01A	1	Pcs	P24
	40X-Y97L-C	1	1799	P21		J02	2	46	P24
	40X-Y94	1	1774	P21		T08	2	50	P24
	40X-Y64	1	3016	P22		M4-40	2	40	P24
	40X-Y17	1	2890	P22		Mi4-17	2	17	P24
	MCJT002	11M		P20					
	NSST120	1.9M		P21					

3013P-S-5	Part	NO.	QTY.	Length(MM)	Page	Code
		40X-Y62-5B	2	430	P17	A009

3013P-S-6	Part	NO.	QTY.	Length(MM)	Page	Code
		40X-Y62-6B	2	806	P17	A009

NO.	QTY.		
	3002	3003	3004
3010P-DD	2	2	2
3013P-S-5	0	2	0
3013P-S-6	0	0	2

Part	NO.	QTY.			Length(MM)	Page
		3002	3003	3004		
	730×1836	10	10	14	1836	P10
	354×1836	0	4	0	1836	P10
	1073×635	4	4	4	1073	P13~14
	730×1331	6	6	8	1331	P15
	730×454	2	4	4	730	P15
	657×1695	4	4	4	1695	P19
	782×863	2	4	4	863	P25

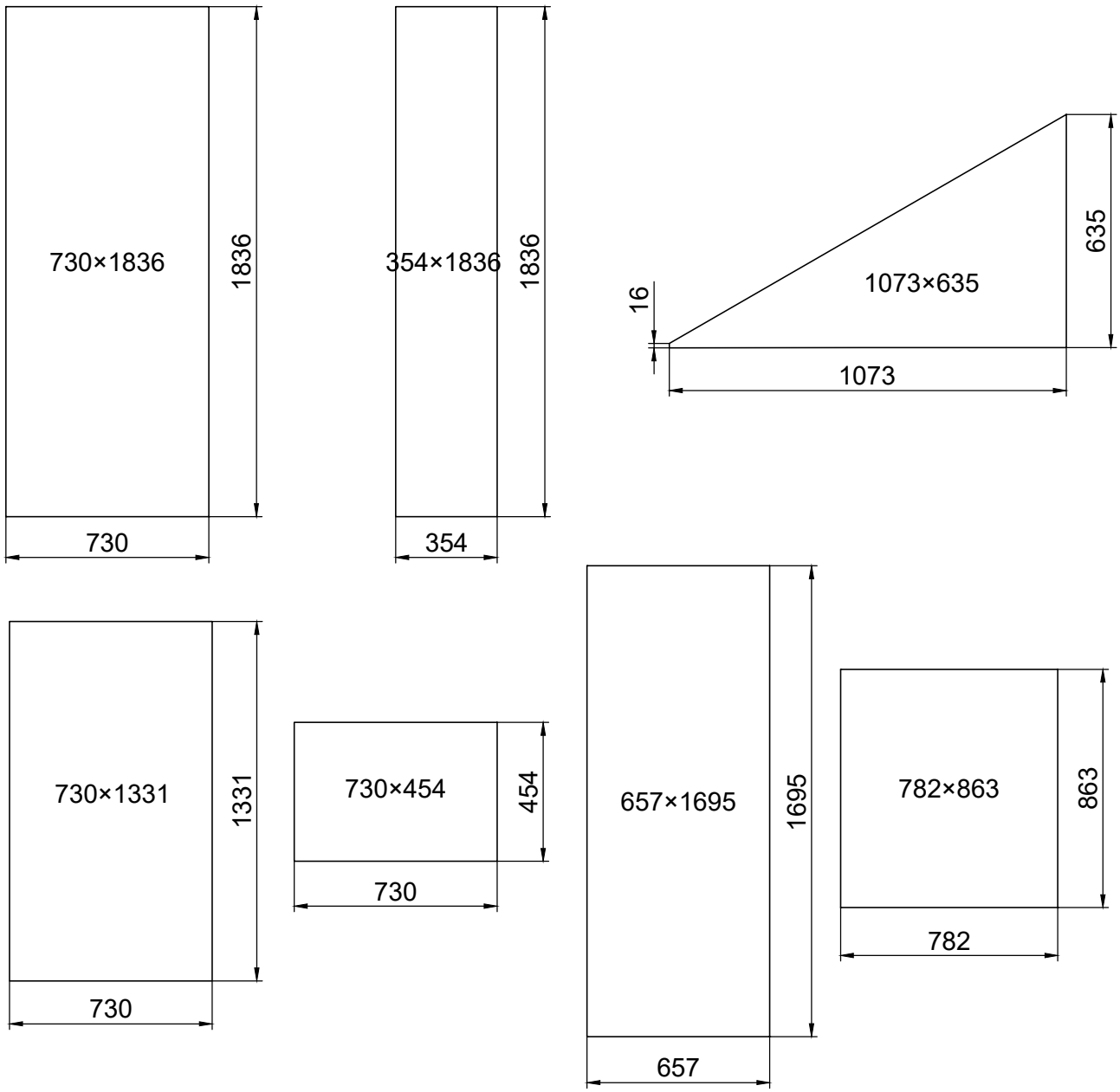

NO.	L1	L2	AREA
3002	3188	3020	7.7 M^2
3003	3939	3771	9.6 M^2
3004	4690	4522	11.4 M^2

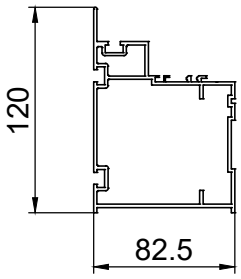

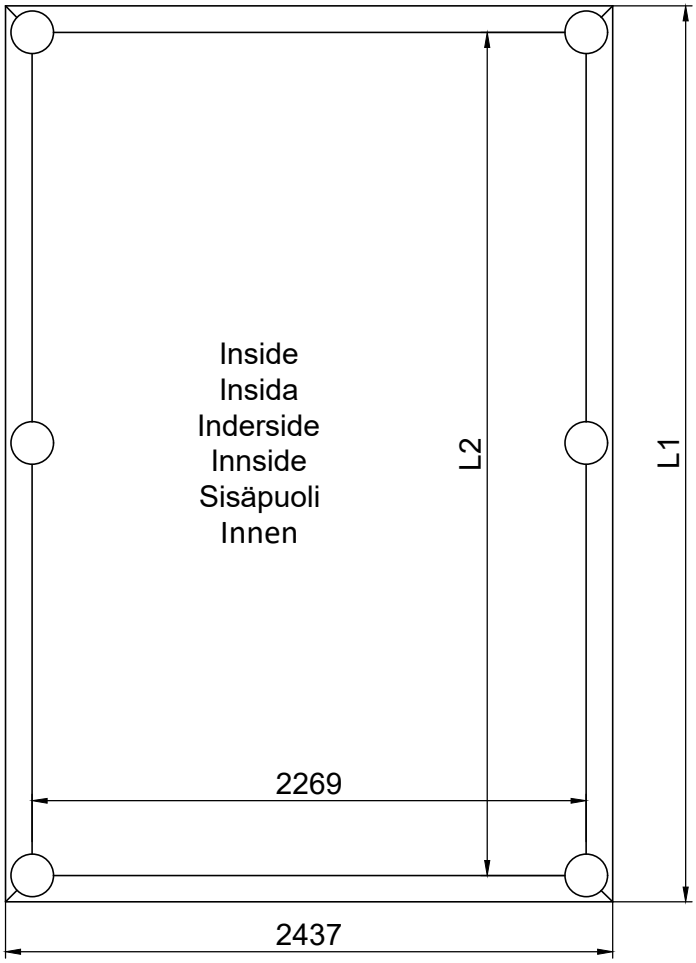

Outside
Utsida
Yderside
Utside
Ulkopuoli
Außen

Part	Product	NO.	Length(MM)	QTY.	Code
	3002	40X-Y11-4	3188	2	A001
	3003	40X-Y11-5	3939		
	3004	40X-Y11-6	4690		

Part	NO.	QTY.	Length(MM)
	40X-Y11-3	2	2437
	7B26-025	8	PCS
	S6-12	20	PCS

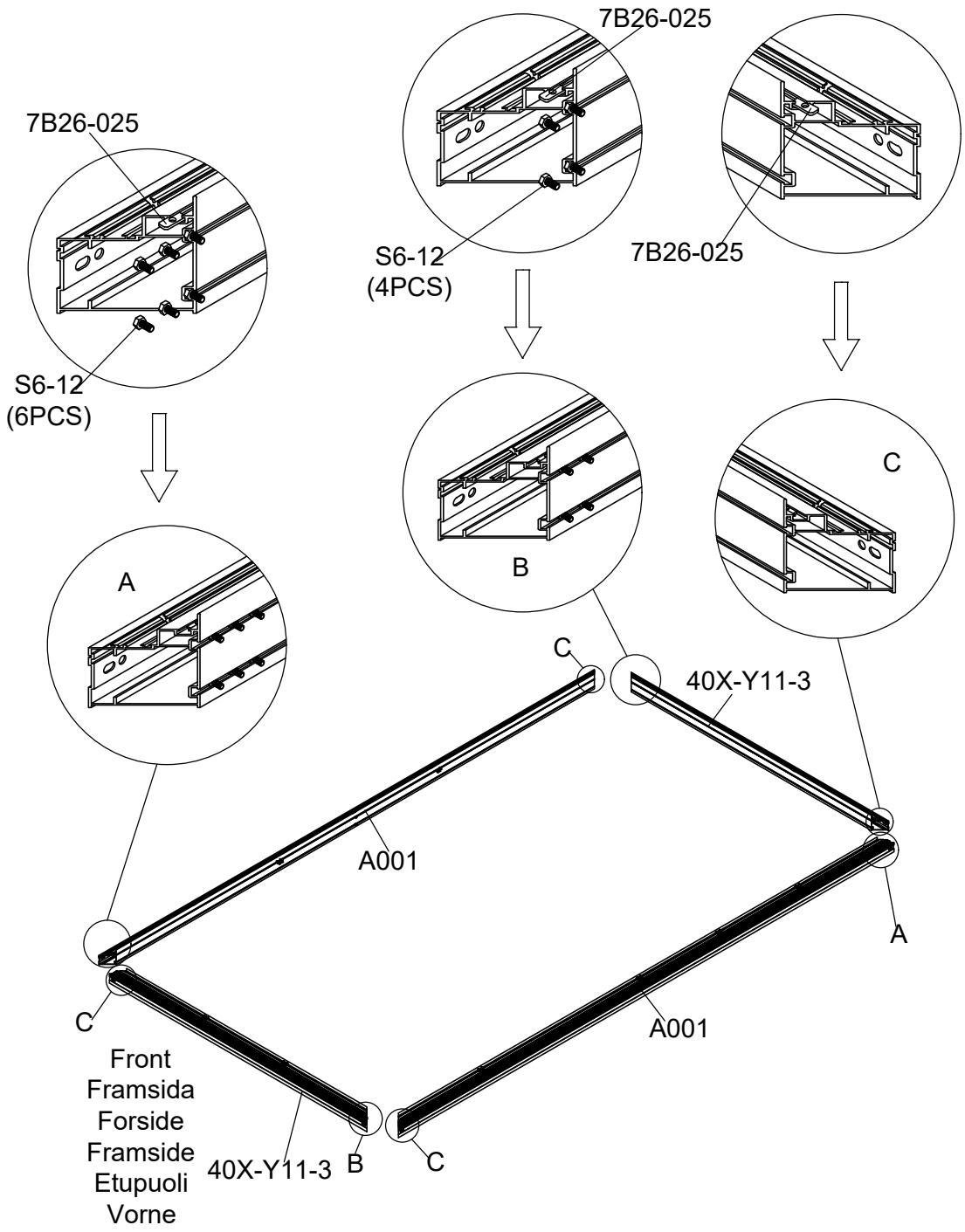

Part	NO.	QTY.	Length(MM)
	W01	4	69

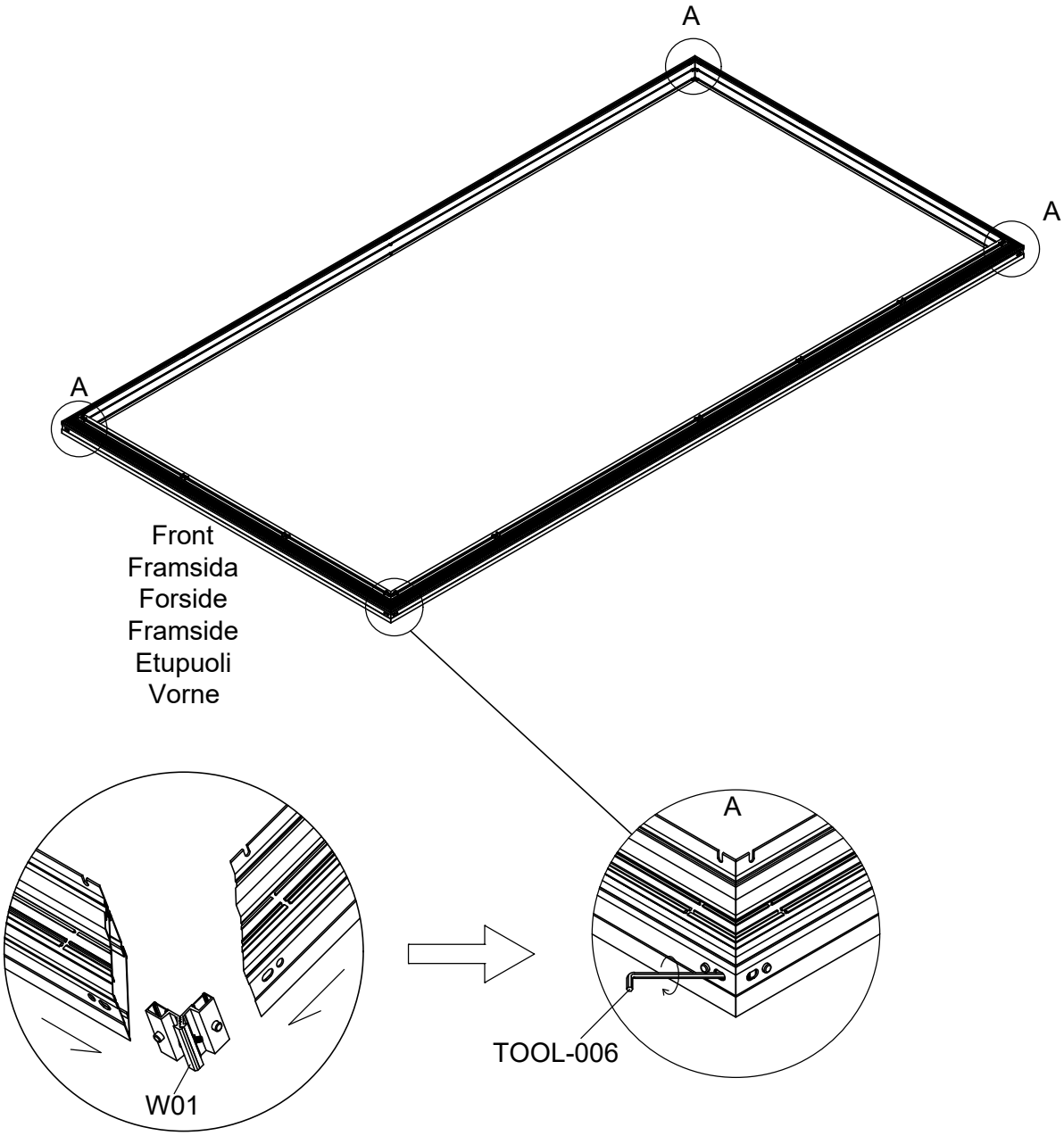

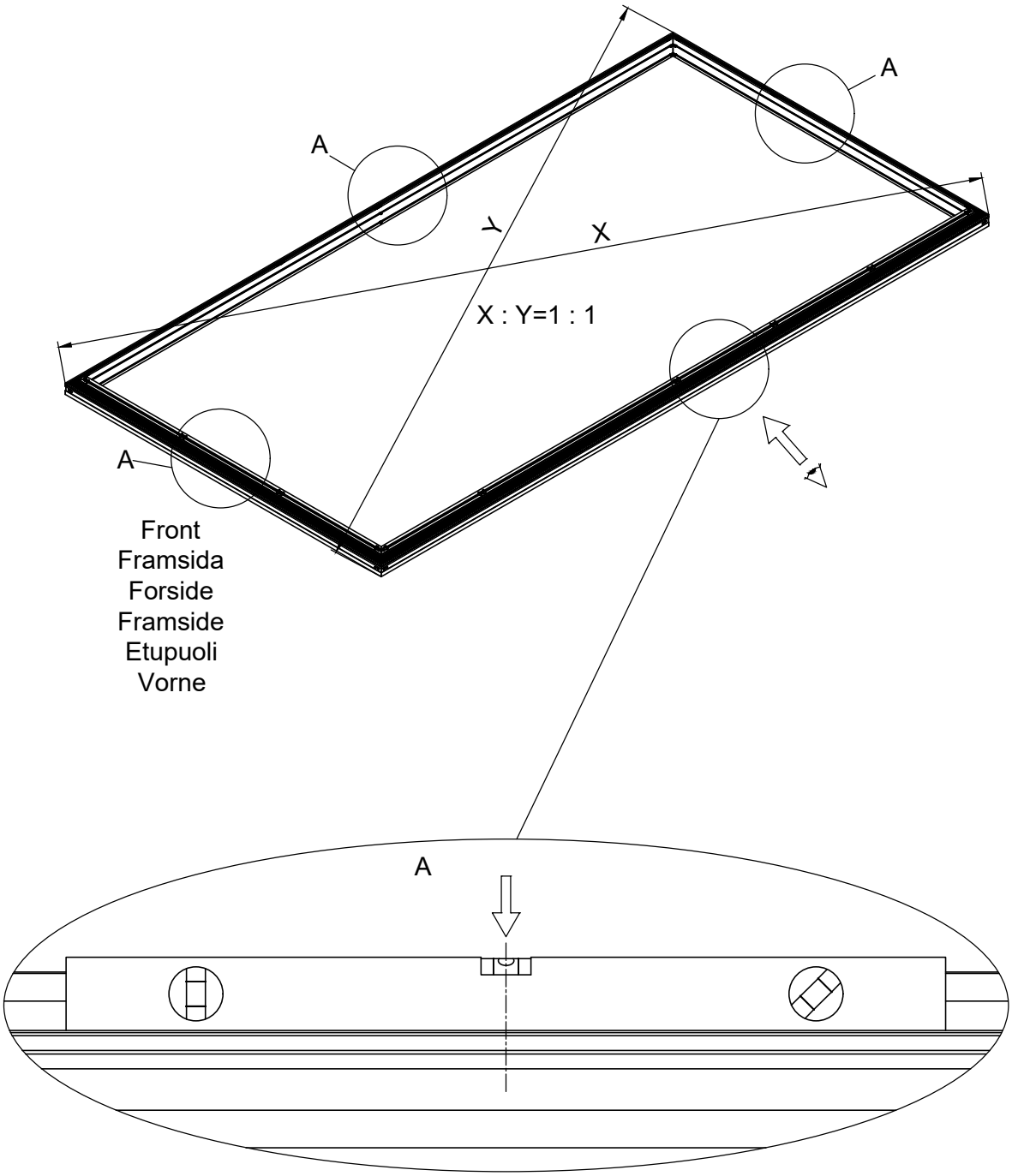
A
A
A
Y
X
X : Y=1 : 1
Front
Framsida
Forside
Framside
Etupuoli
Vorne
A

Part	NO.	QTY.	Length(MM)
	7B26-014	6	500
	M6	20	PCS

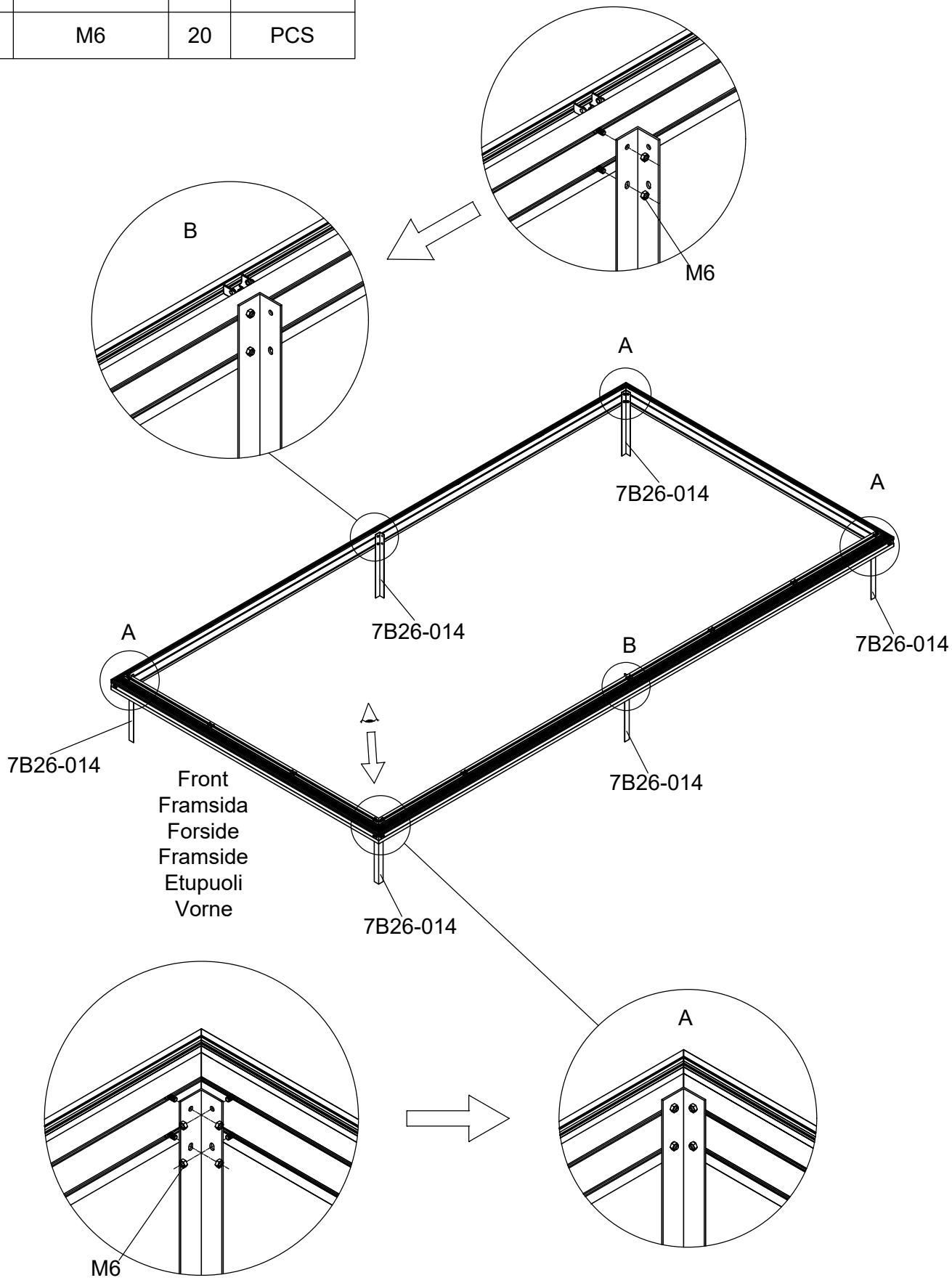

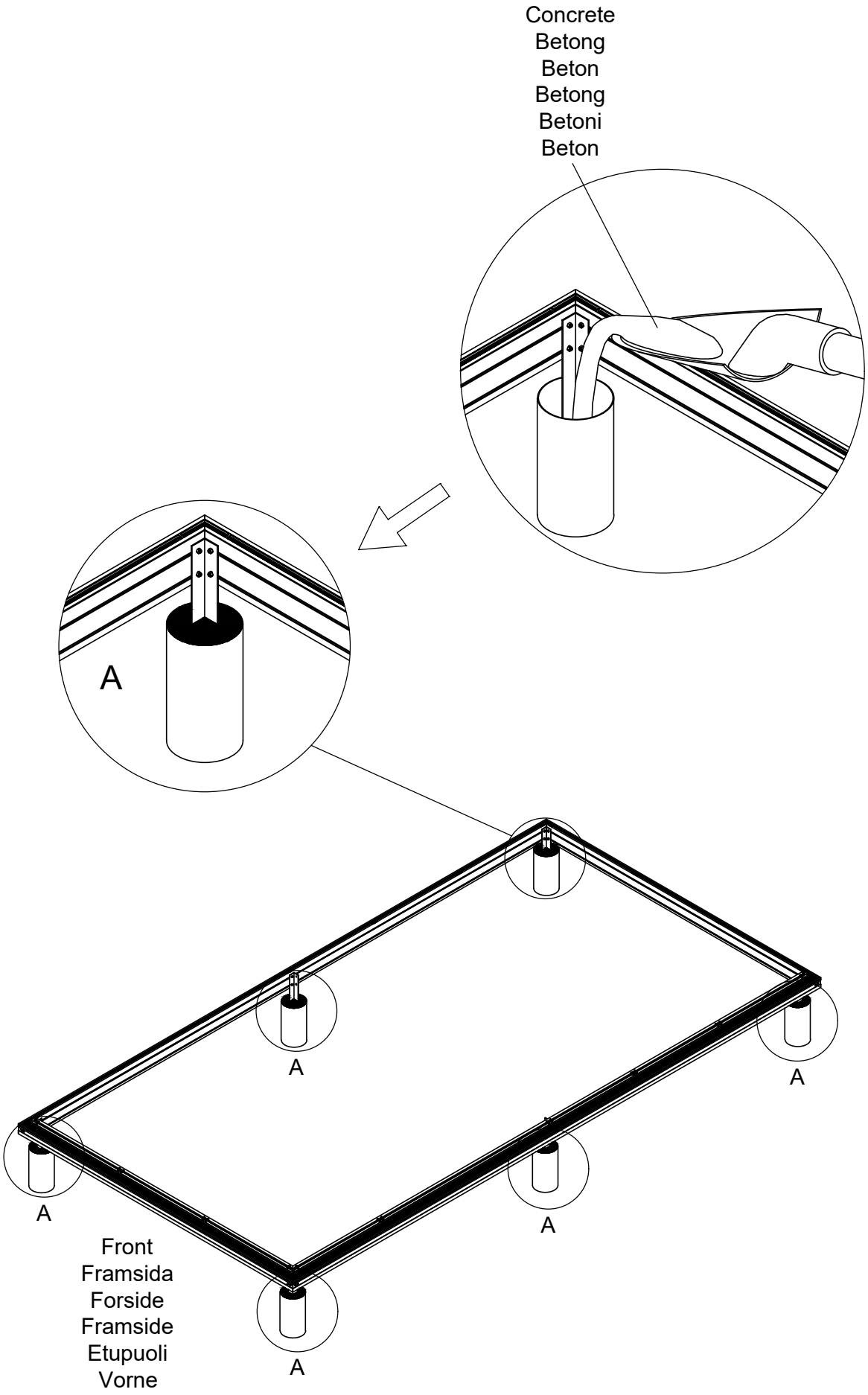
Concrete
Betong
Beton
Betong
Betoni
Beton
A
A
A
A
A
A
Front
Framsida
Forside
Framside
Etupuoli
Vorne

Part	NO.	QTY.	Length(MM)
	7B26-017	4	PCS
	M6-8	8	PCS

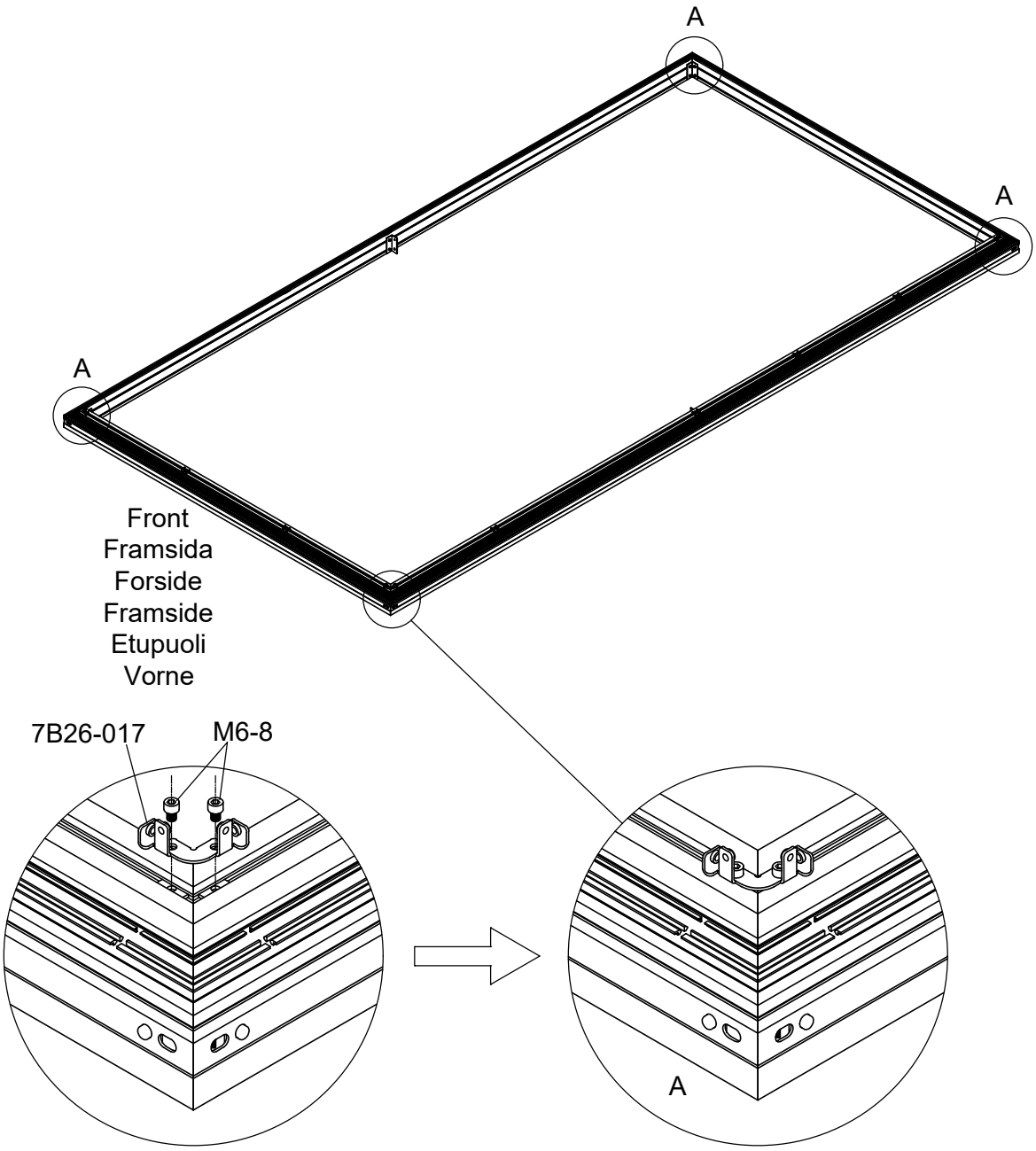

Part	NO.	QTY.	Length(MM)
	40X-Y20	4	1811
	Si6-16	8	PCS
	J05	8	PCS
	M6-8	8	PCS

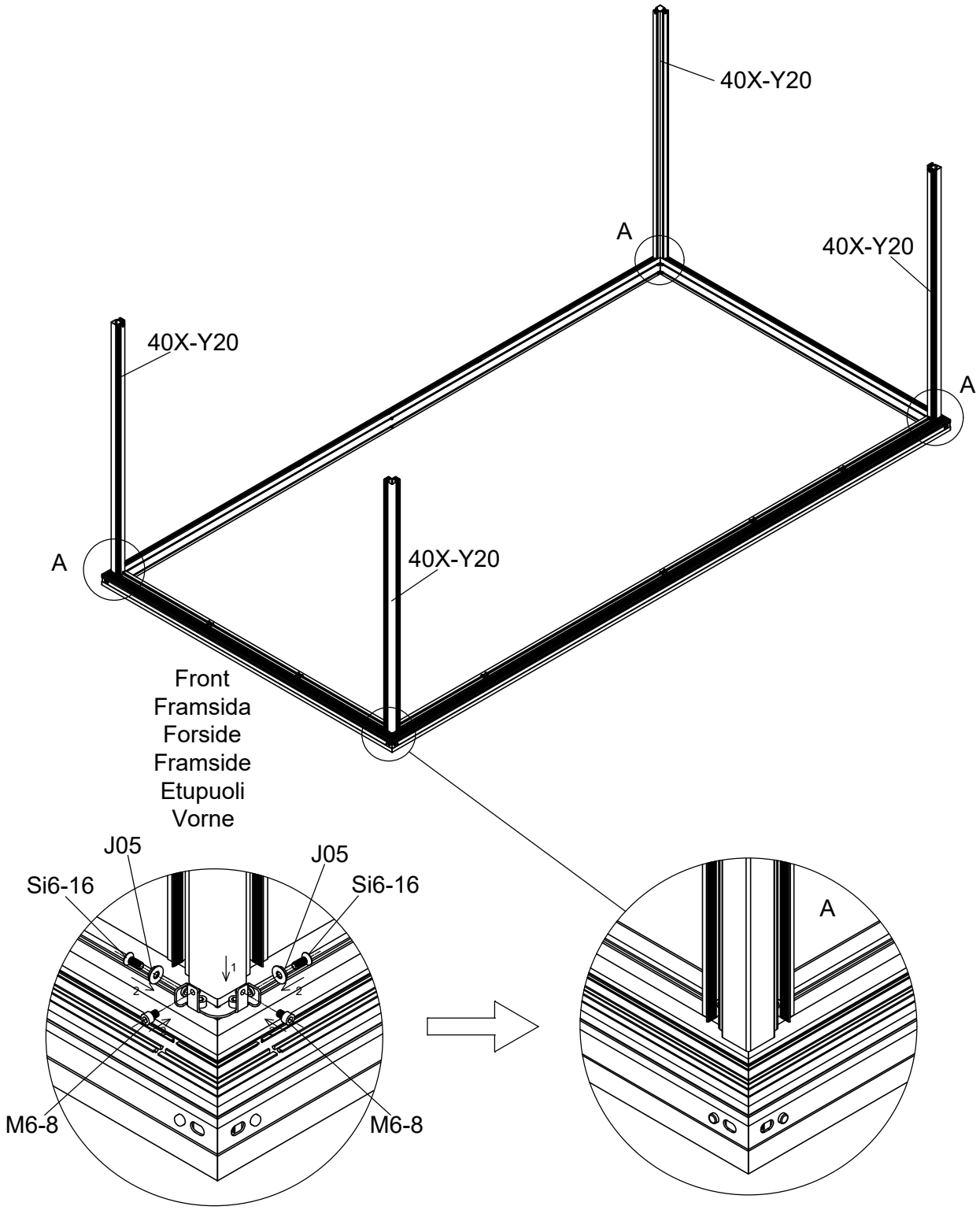

Part	NO.	QTY.	Length(MM)
	30X-Y60	2	2272
	L05	4	1920
	Si6-16	4	PCS
	J05	4	PCS

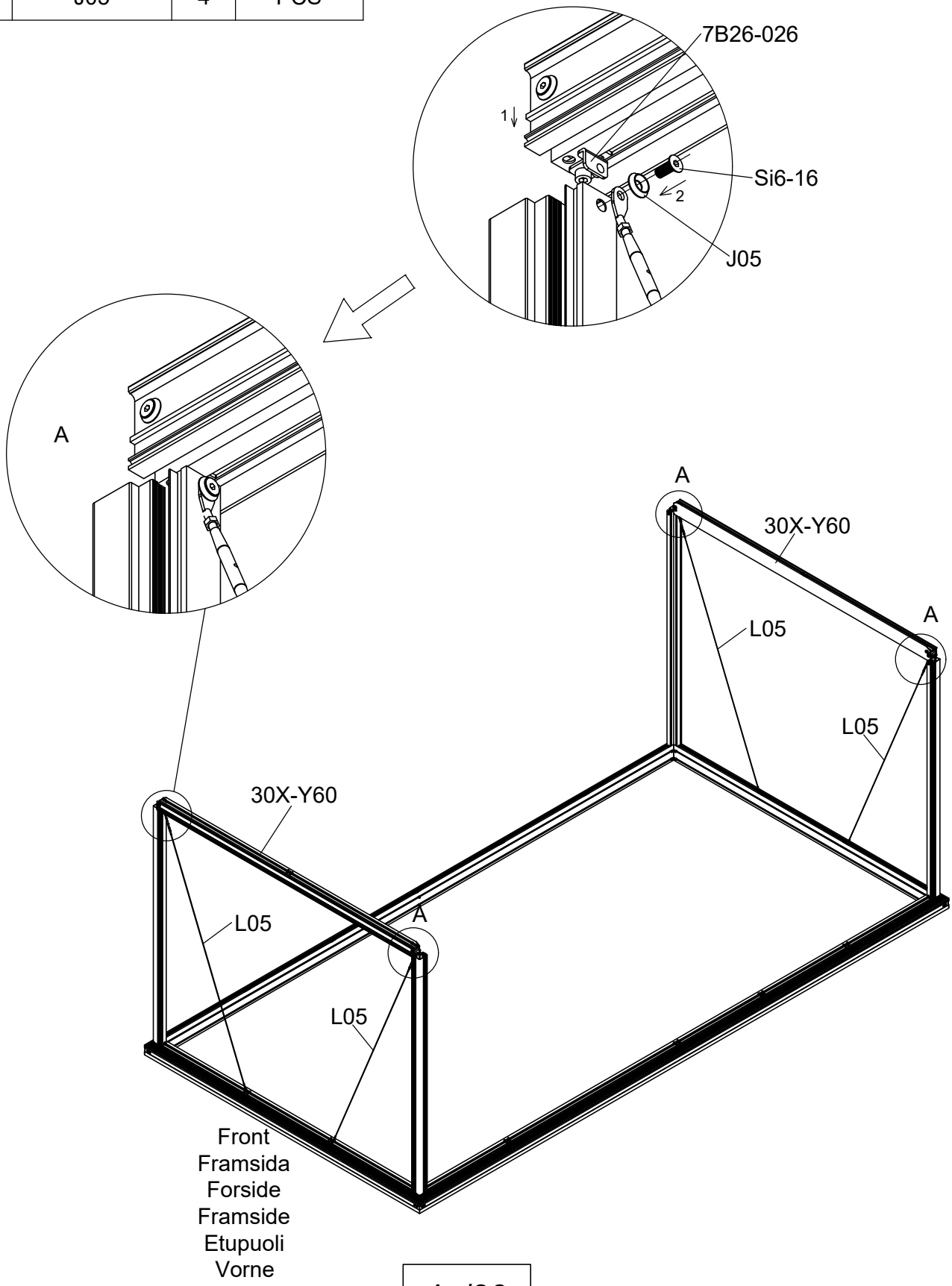

Part	Product	NO.	Length(MM)	QTY.	Code
	3002	40X-Y62-4NR	3132	1	A002
	3003	40X-Y62-5NR	3883		
	3004	40X-Y62-6NR	4634		
	3002	40X-Y62-4NL	3132	1	A003
	3003	40X-Y62-5NL	3883		
	3004	40X-Y62-6NL	4634		

Part	NO.	QTY.	Length(MM)
	L05	4	1920
	Si6-16	4	PCS
	J05	4	PCS

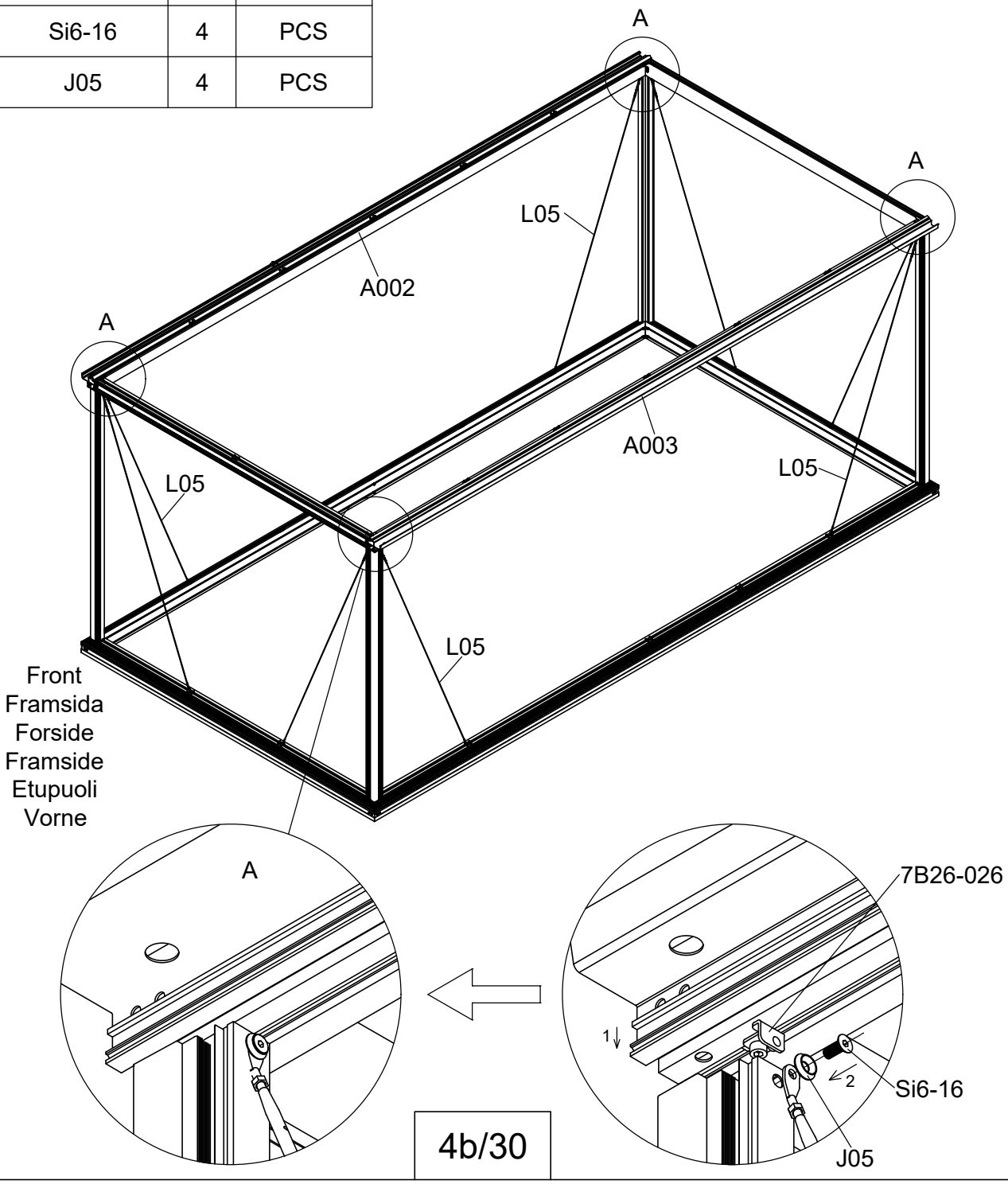

Part	NO.	QTY.	Length(MM)
	7B26-029	4	PCS
	M6-20	8	PCS

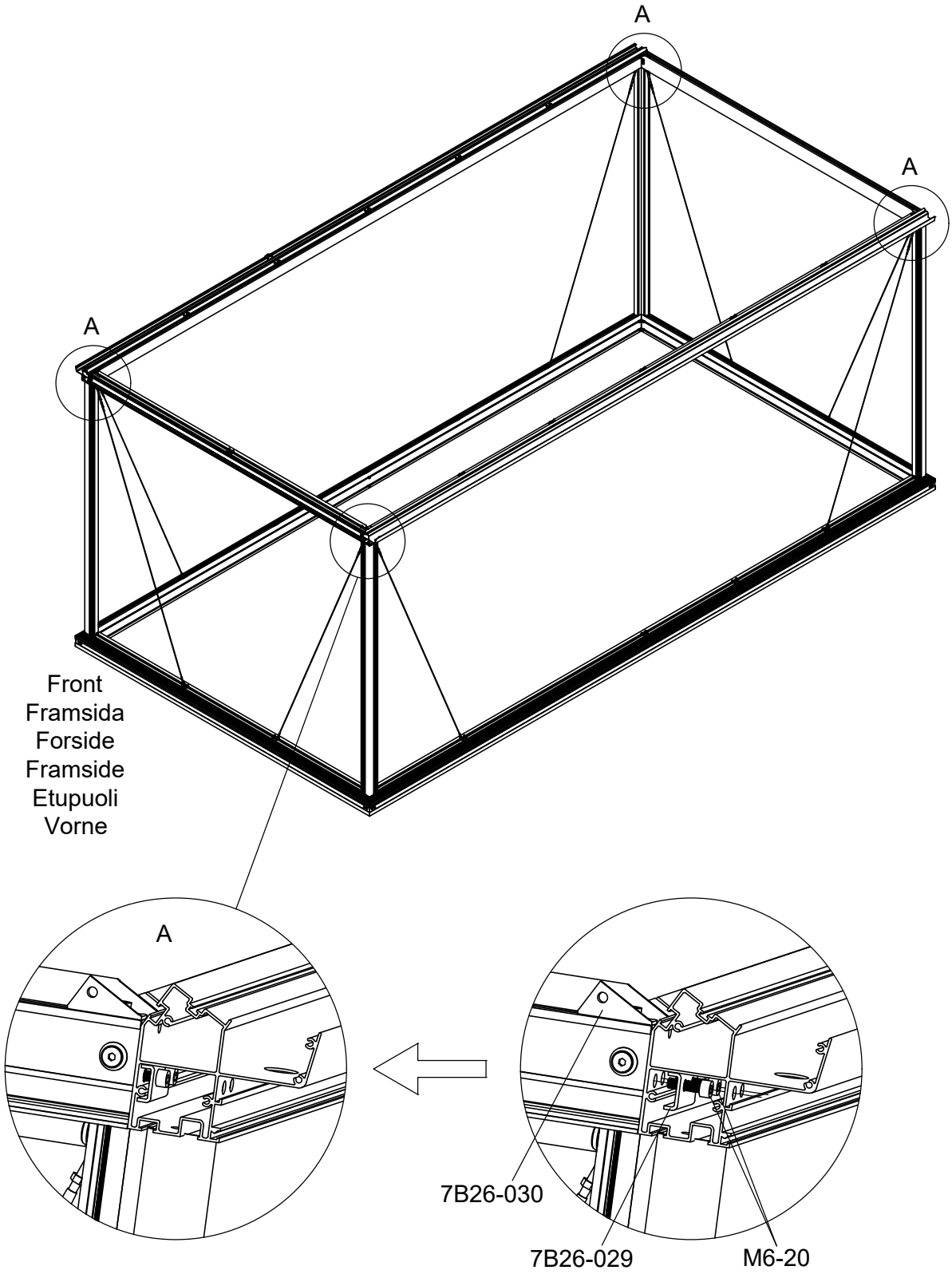

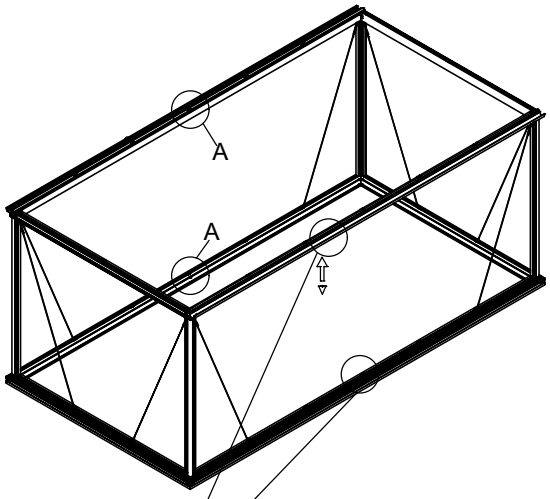

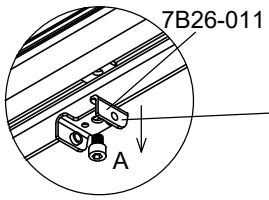

Disassemble this part.
Avmontera fästet från profilen på långsidan.
Afmonter beslaget fra profilen på langsiden.
Demonter festet fra profilen på langsiden.
Irrota profiilin pitkällä sivulla oleva kiinnike.
Demontieren Sie dieses Teil.

3002	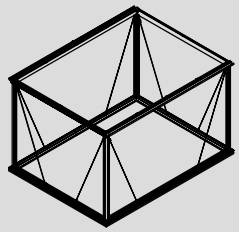
3004	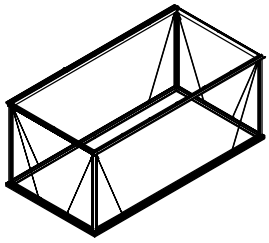

3003	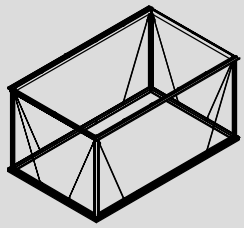

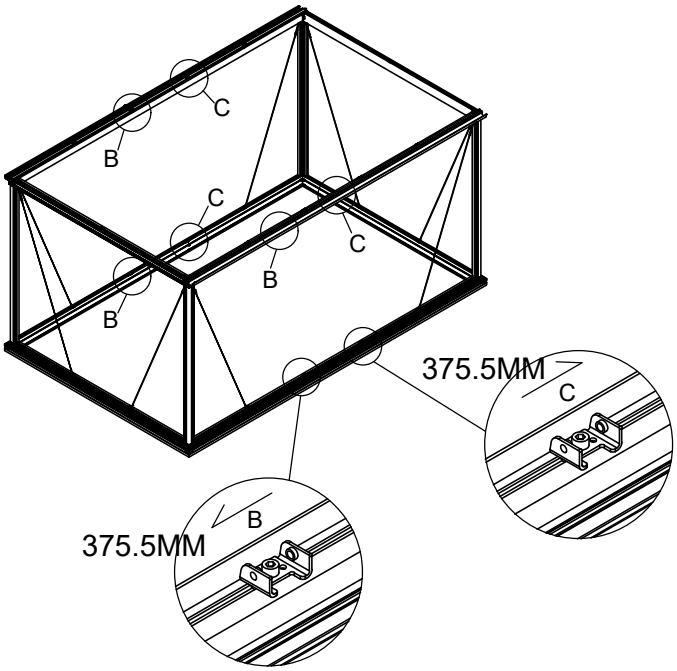

If you have chosen Side Windows, please assemble them from this step.
Please refer to the Side Window Instructions Page "7W10-V3S 6/16 - 16/16".

Om du har valt sidofönster ska du montera dem från och med det här steget.
Se sidan med instruktioner för sidofönster "7W10-V3S 6/16 - 16/16".

Hvis du har valgt sidevinduer, skal du montere dem fra dette trin og fremefter.
Se side 7W10-V3S 6/16 - 16/16 i vejledningen til sidevinduer.

Hvis du har valgt Sidevinduer, vennligst sett dem sammen fra dette trinnet.
Vennligst se sidevindusinstruksjonene "7W10-V3S 6/16 - 16/16".

Jos olet valinnut sivuikkunat, kokoa ne tästä vaiheesta alkaen.
Katso sivuikkunoiden ohjeet sivulta "7W10-V3S 6/16 - 16/16".

Wenn Sie sich für Seitenfenster entschieden haben, montieren Sie diese bitte ab diesem Schritt.
Bitte beachten Sie die Anleitung für die Seitenfenster auf der Seite "7W10-V3S 6/16 - 16/16".

Green Room®
BY WILLAB GARDEN

SH7W10-V3S

If the Side Window is assembled on a new greenroom, please start with Page 6/16.
If the Side Window is added to an existing greenroom, please start with Page 1/16.

Vid montage på ett nytt Green Room, börja på sidan 6/16.
Vid eftermontage på ett befintligt Green Room börjar du på sidan 1/16.

Hvis sidevinduet monteres på et nyt Green Room, skal du starte på side 6/16.
Ved eftermontering på et eksisterende Green Room, skal du starte på side 1/16.

Hvis sidevinduet er montert på et nytt Green Room, start på side 6/16.
Ved ettermontering til et eksisterende Green Room, start på side 1/16.

Jos sivuikkuna asennetaan uuteen Green Room, aloita sivulta 6/16.
Jos sivuikkuna lisätään olemassa olevaan Green Room, aloita sivulta 1/16.

Wenn das Seitenfenster in einem neuen Green Room, montiert wird, beginnen Sie bitte mit Seite 6/16.
Wenn das Seitenfenster in einen bestehenden Green Room, eingebaut wird, beginnen Sie bitte mit Seite 1/16.

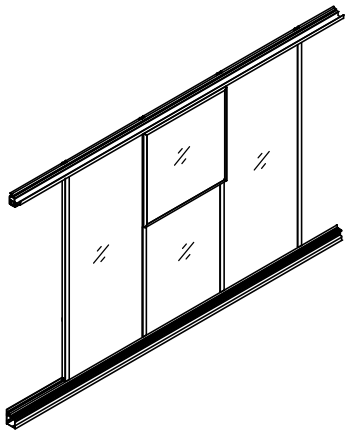

Part	NO.	QTY.	Length(MM)
	40X-Y30	8	1810
	Si6-16	16	PCS
	J05	16	PCS

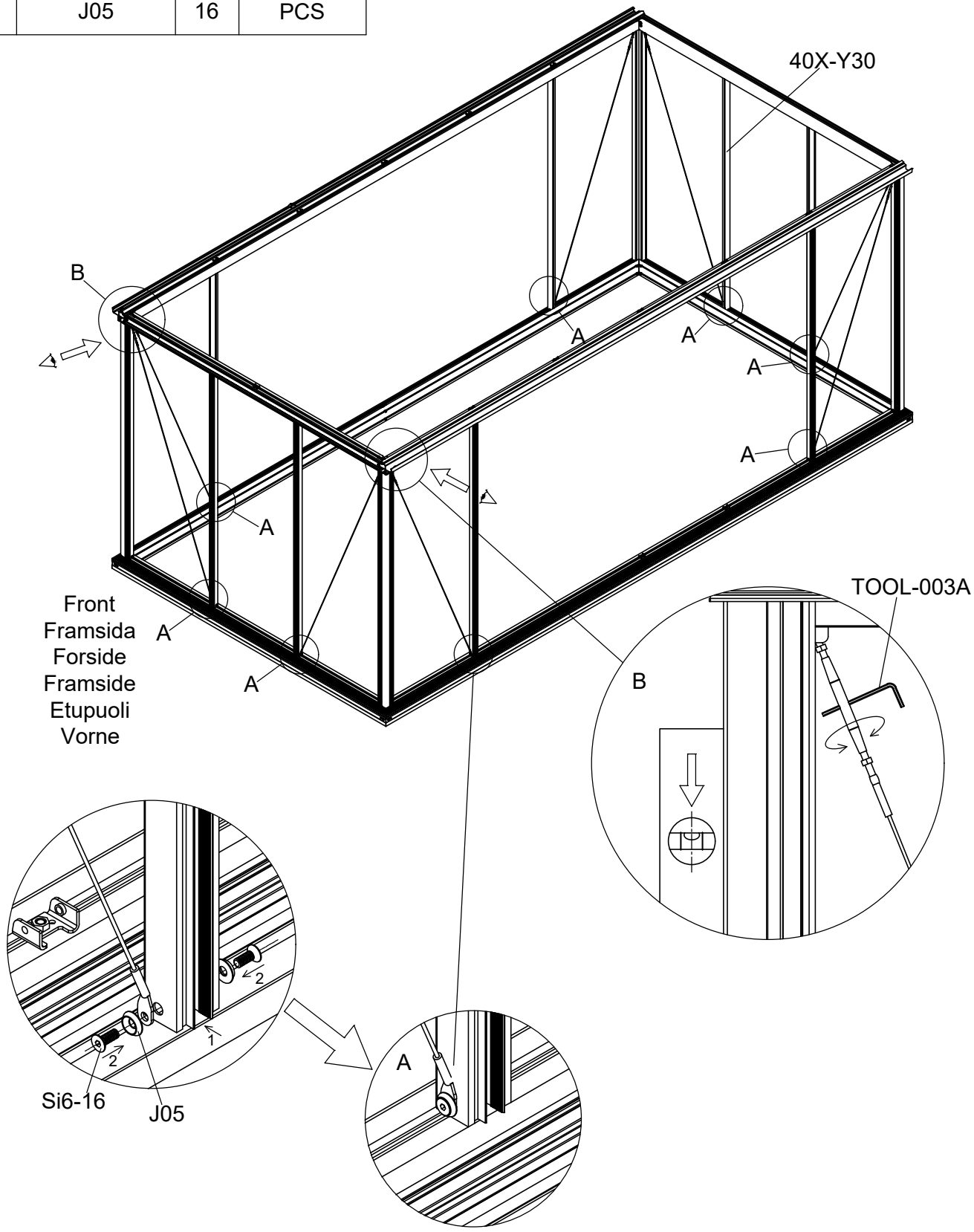

Part	NO.	QTY.			Length(MM)
		3002	3003	3004	
	40X-Y30	0	4	4	1810
	Si6-16	16	32	32	PCS
	J05	16	32	32	PCS

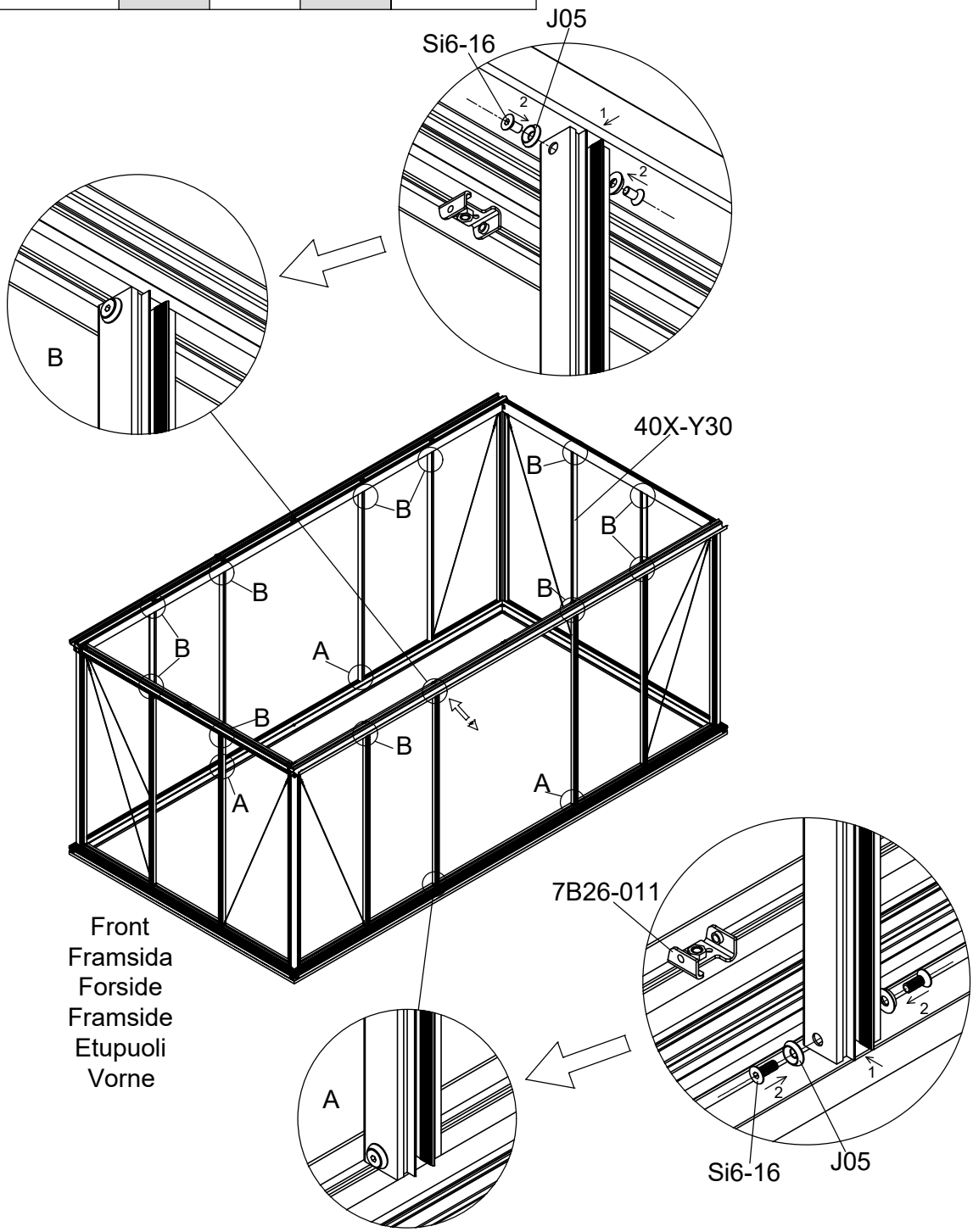

3002	3003	3004
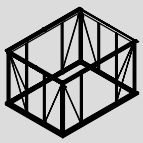	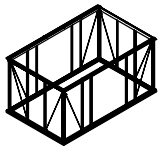	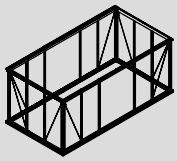

Part	NO.	QTY.	Length(MM)
	30X-Y32	2	642
	Si6-16	4	PCS
	J05	4	PCS

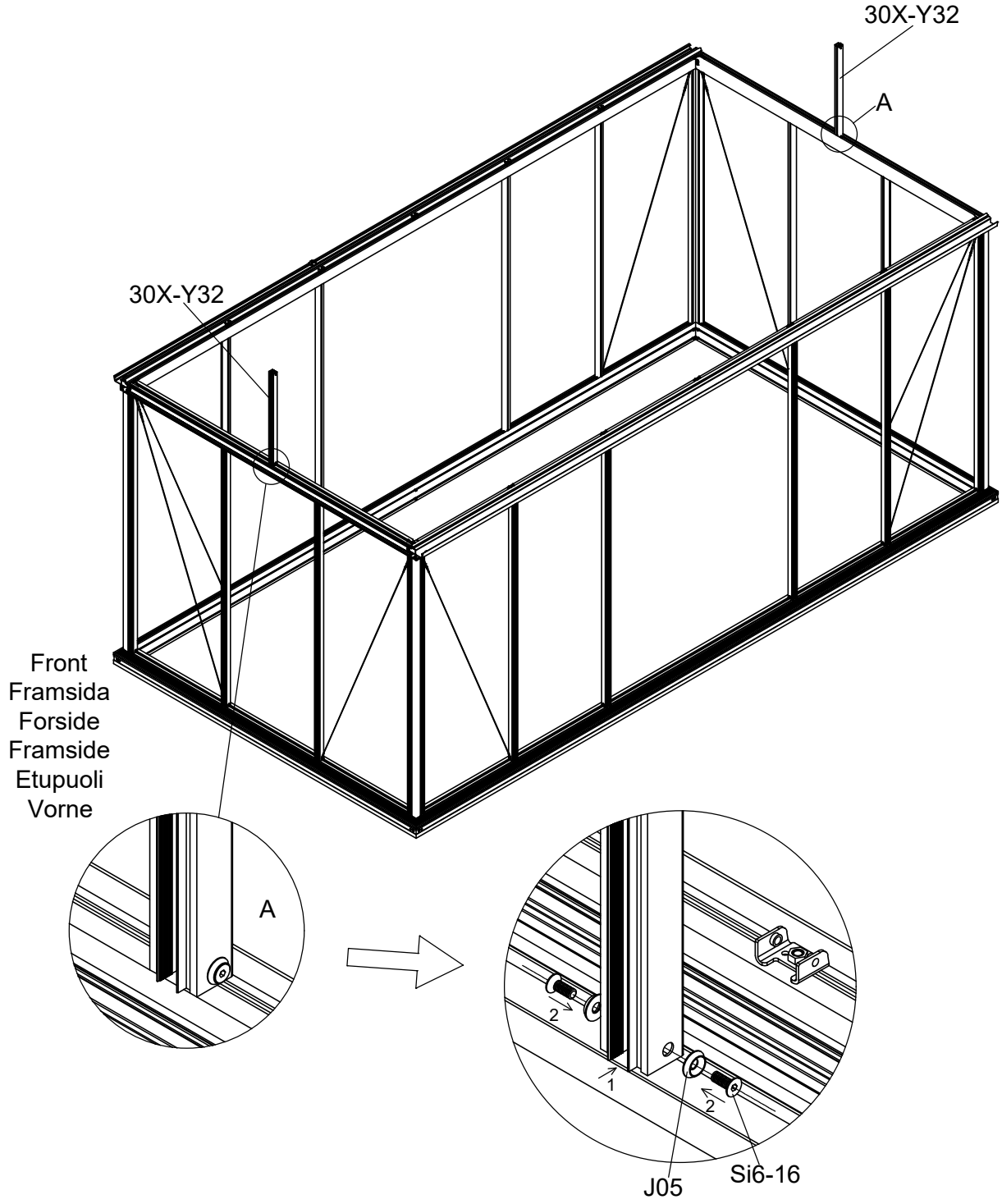

Part	Product	NO.	Length(MM)	QTY.	Code
	3002	40X-Y63-4	3118	1	A004
	3003	40X-Y63-5	3869		
	3004	40X-Y63-6	4620		

Part	NO.	QTY.	Length(MM)
	M6-8	4	PCS

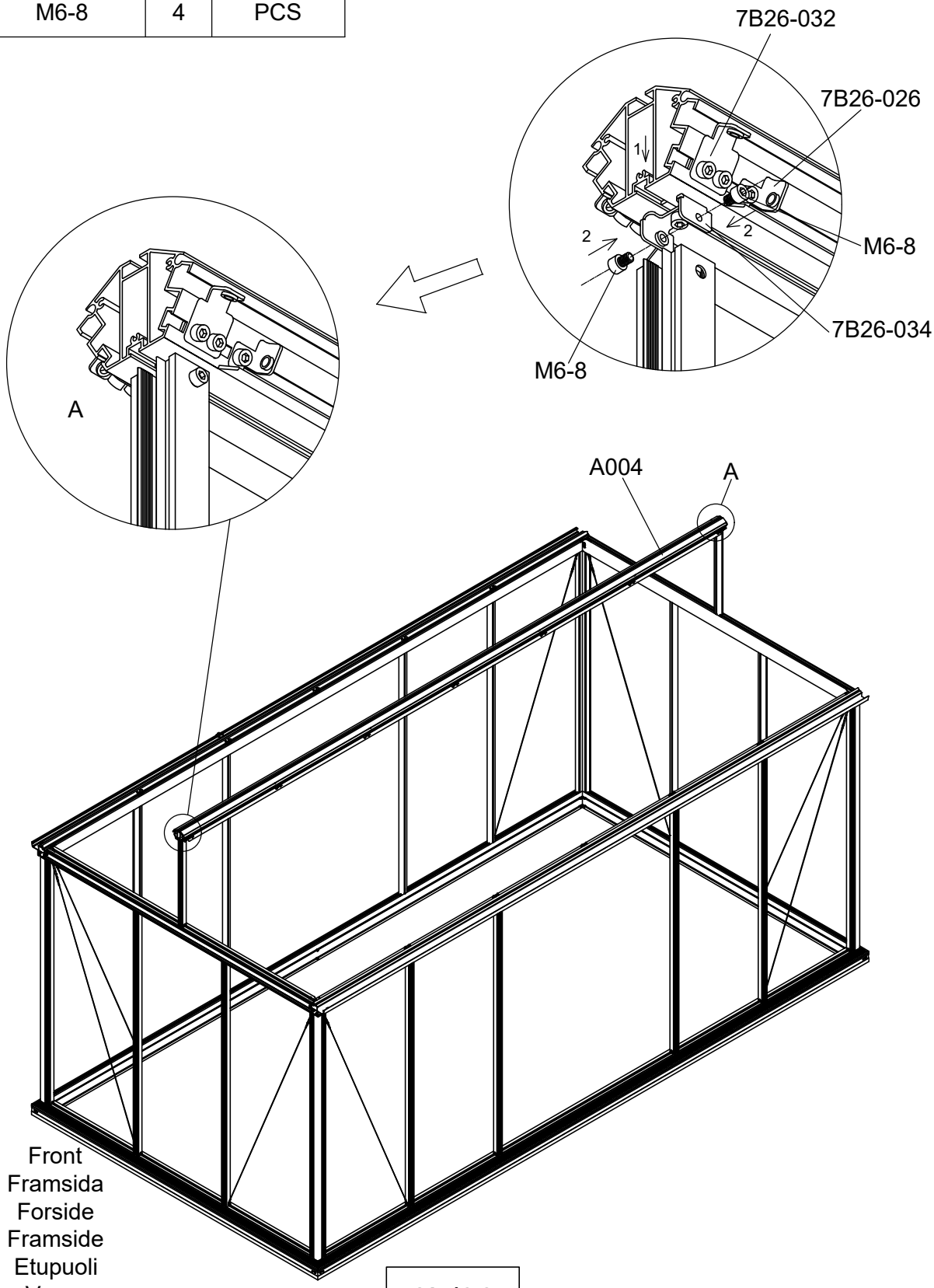

Part	NO.	QTY.	Length(MM)
	30X-Y21	2	1321
	30X-Y22	2	1321
	Si6-16	8	PCS
	J05	8	PCS
	L18	4	1450
	7B26-033	4	PCS

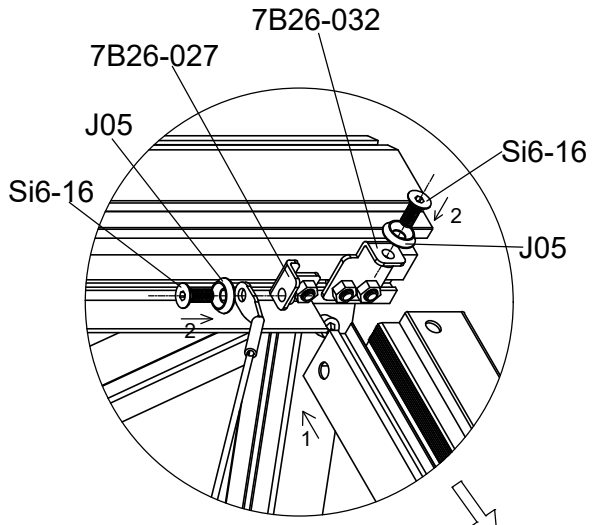

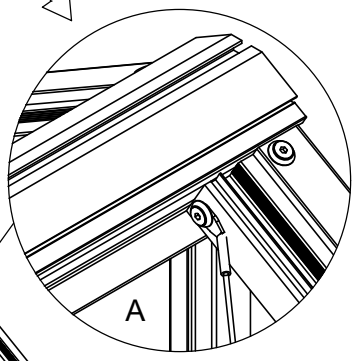

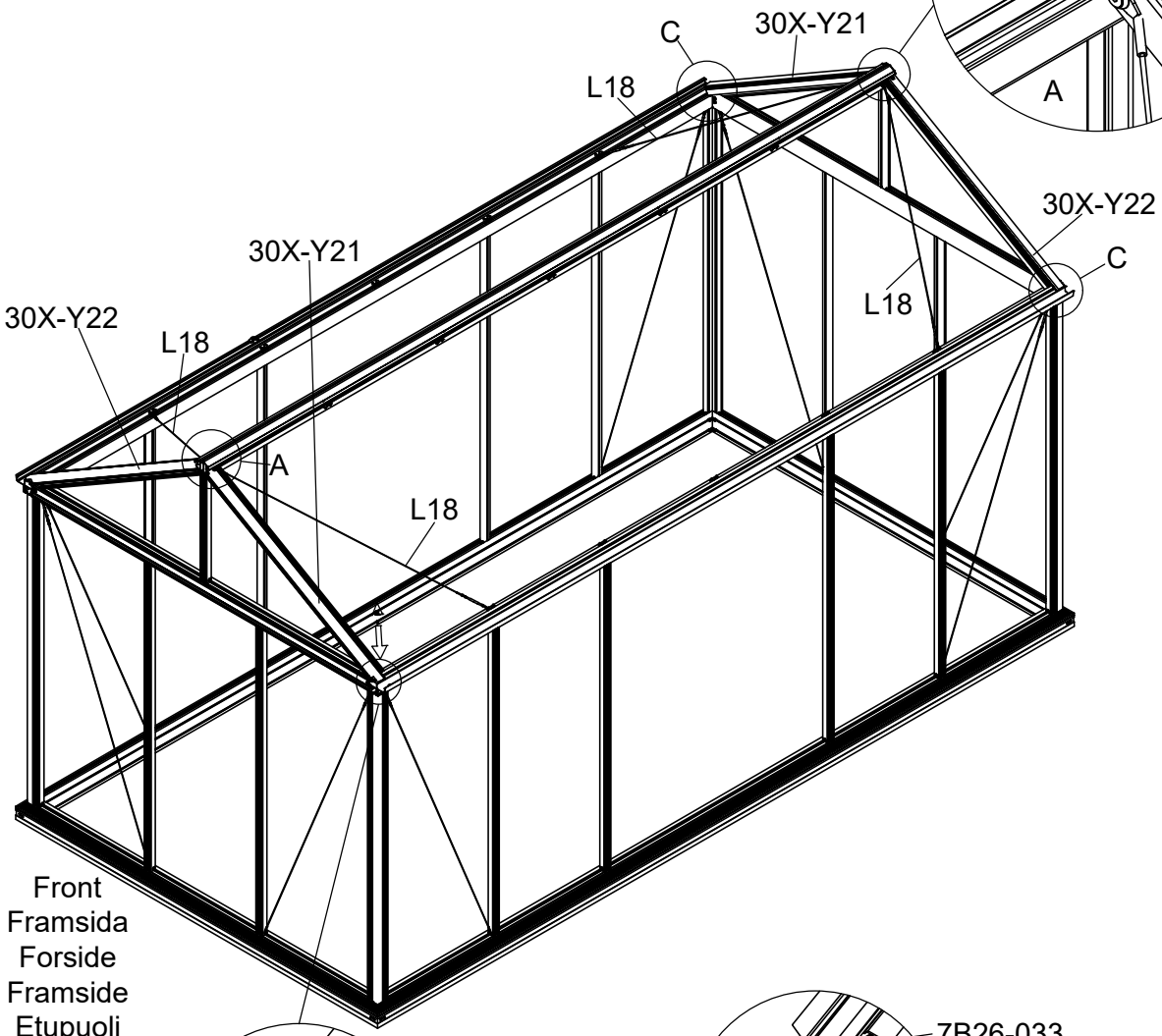

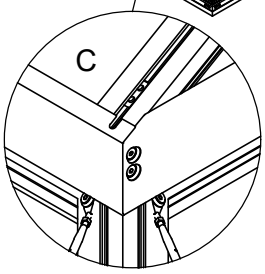

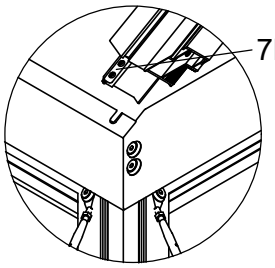

Part	NO.	QTY.	Length(MM)
	J05	4	PCS
	Si6-12	4	PCS
	M6-8	4	PCS

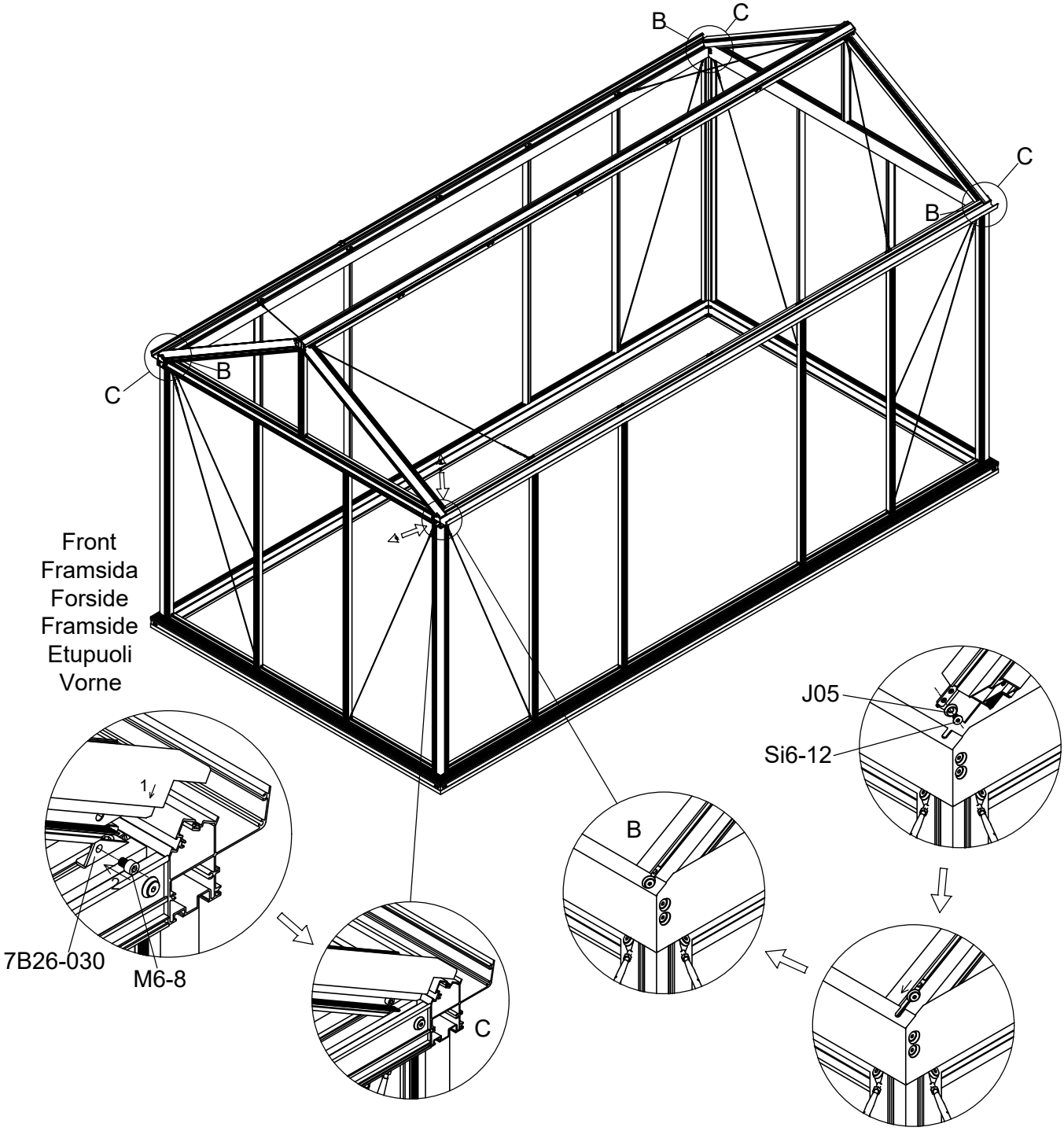

Part	NO.	QTY.			Length(MM)
		3002	3003	3004	
	30X-Y33R	2	4	4	1282
	30X-Y33L	2	4	4	1282
	40X-Y34B	2	4	4	713
	Si5-16	8	16	16	PCS
	J01	8	16	16	PCS

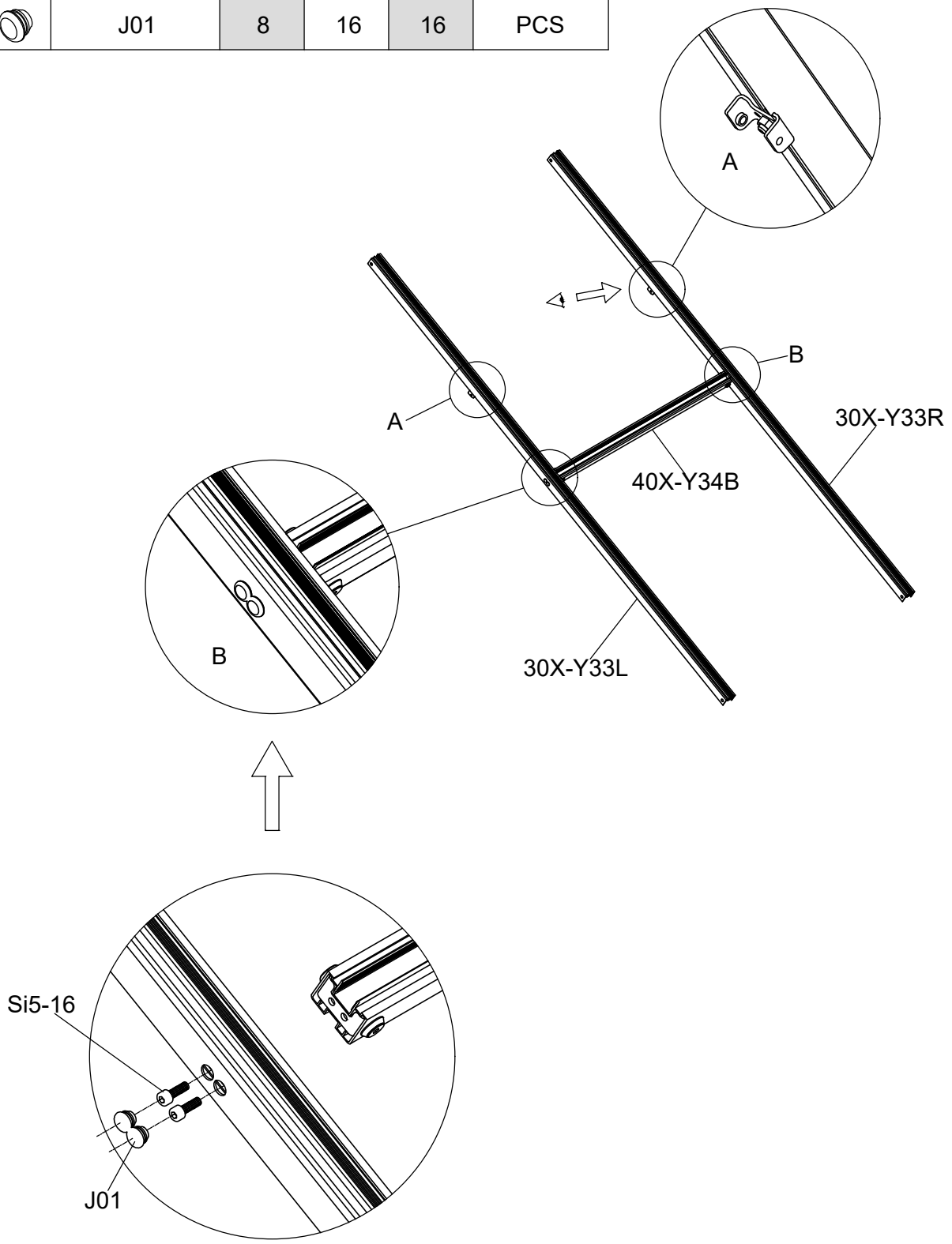

Part	NO.	QTY.			Length(MM)
		3002	3003	3004	
	30X-Y33-A	2	0	2	1282

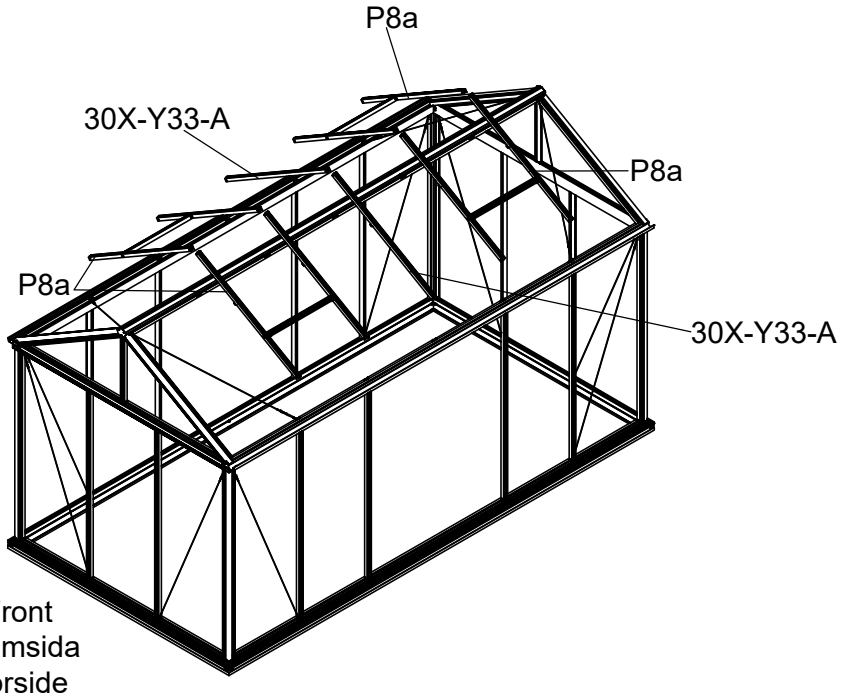

Front
Framsida
Forside
Framside
Etupuoli
Vorne

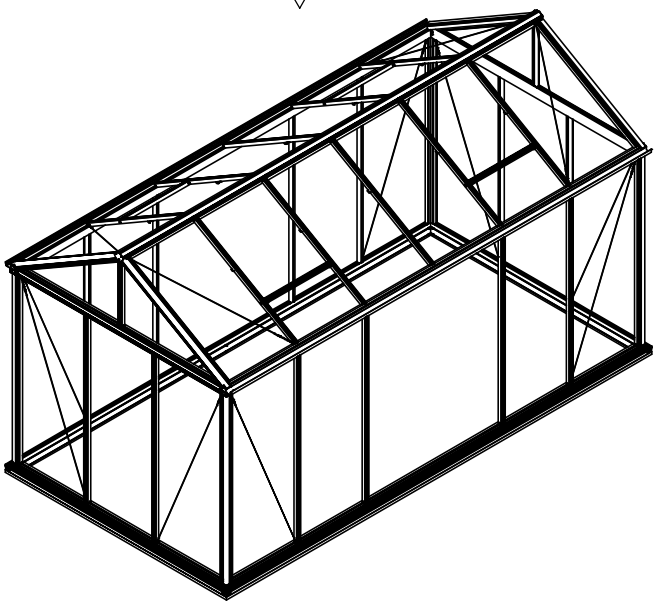

Front
Framsida
Forside
Framside
Etupuoli
Vorne

3002	3003	3004
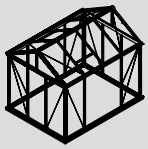	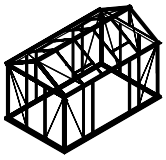	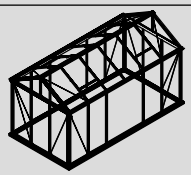

Part	NO.	QTY.			Length(MM)
		3002	3003	3004	
	Si6-16	24	32	40	PCS
	J05	24	32	40	PCS

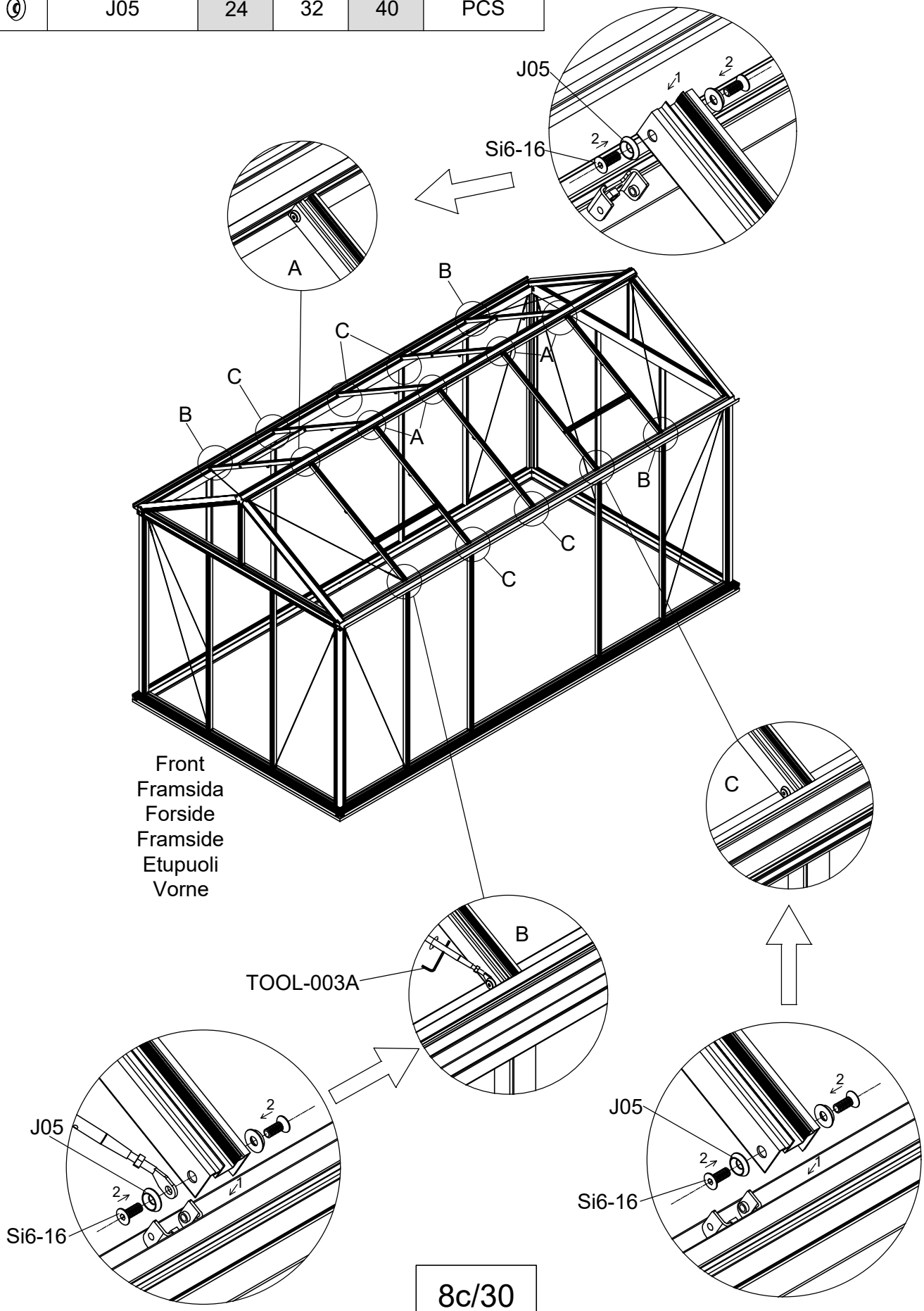

Part	NO.	QTY.			Length(MM)
		3002	3003	3004	
	40X-Y35	3	4	5	1000
	Si6-16	12	16	20	PCS
	J05	12	16	20	PCS

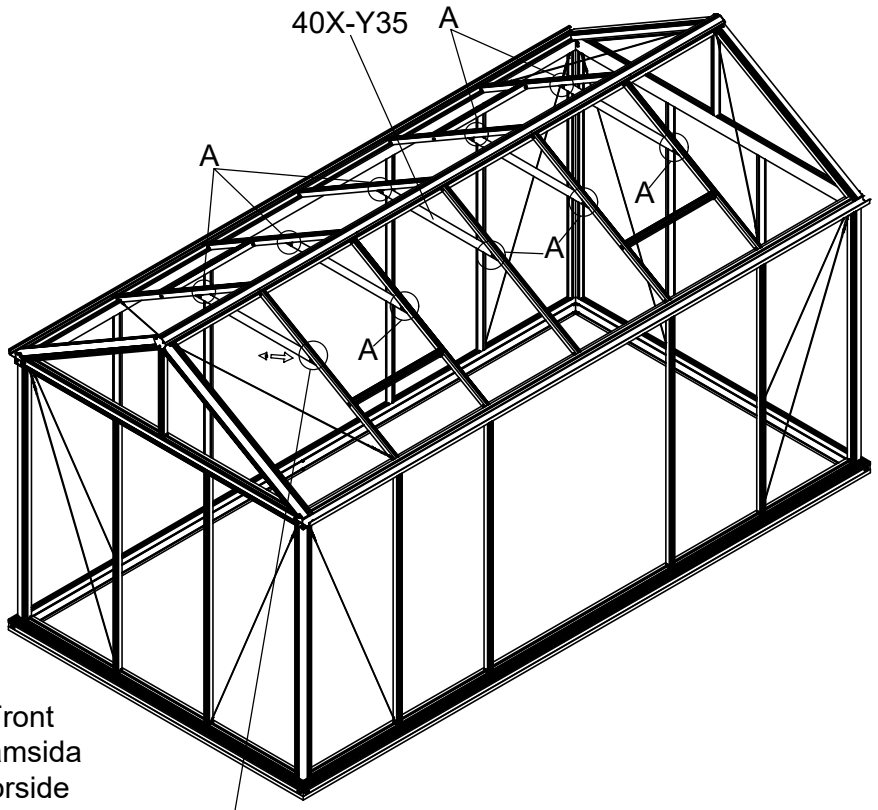

Front
Framsida
Forside
Framside
Etupuoli
Vorne

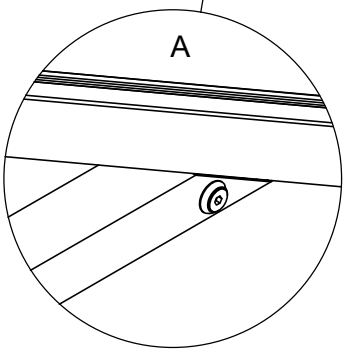

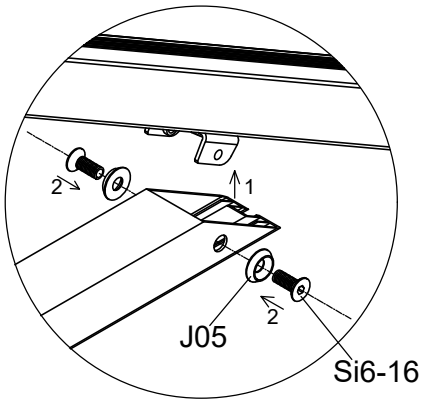

3002	3003	3004
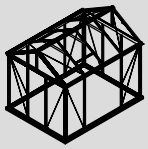	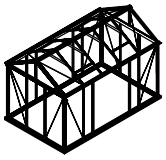	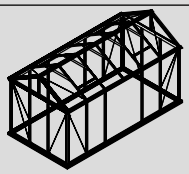

Part	NO.	QTY.			Length(MM)
		3002	3003	3004	
	730×1836	5	5	7	1836
	354×1836	0	2	0	1836

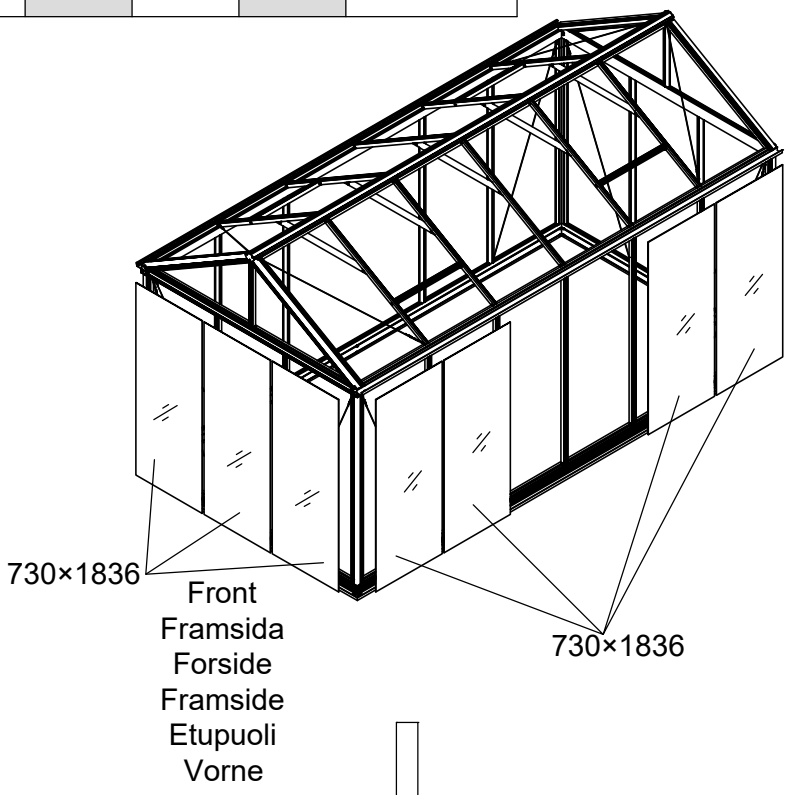

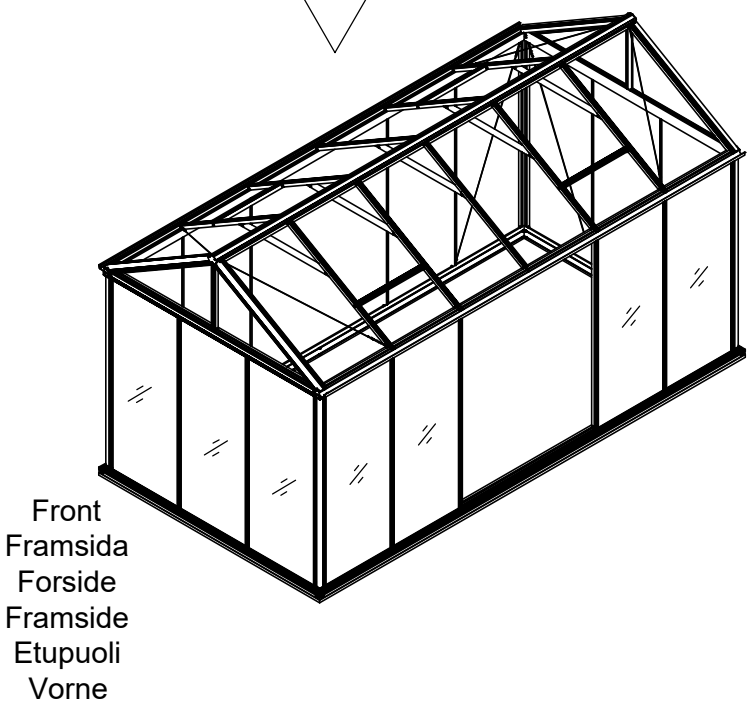

3002	3003	3004
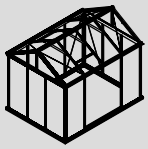	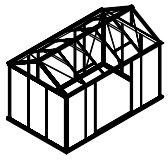	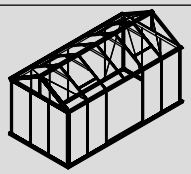

Part	NO.	QTY.			Length(MM)
		3002	3003	3004	
	730×1836	5	5	7	1836
	354×1836	0	2	0	1836

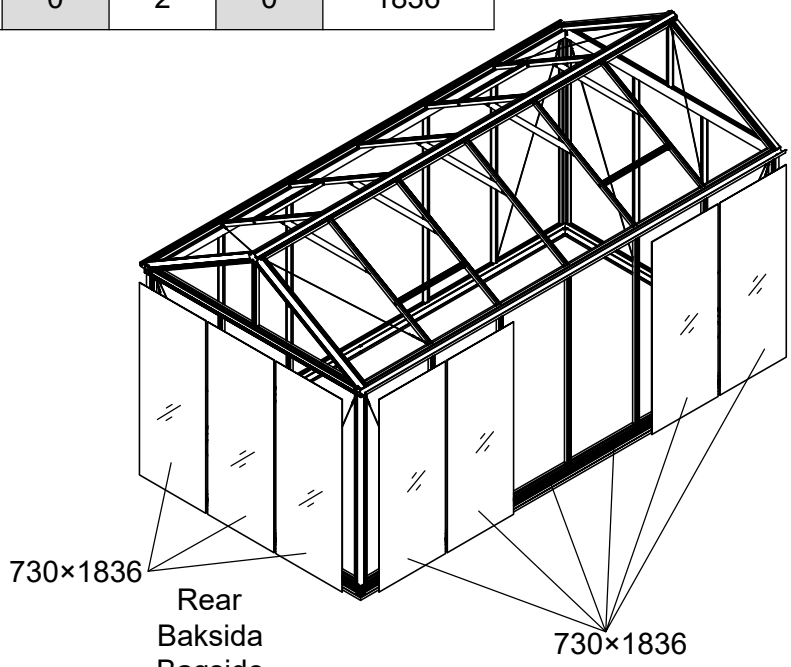

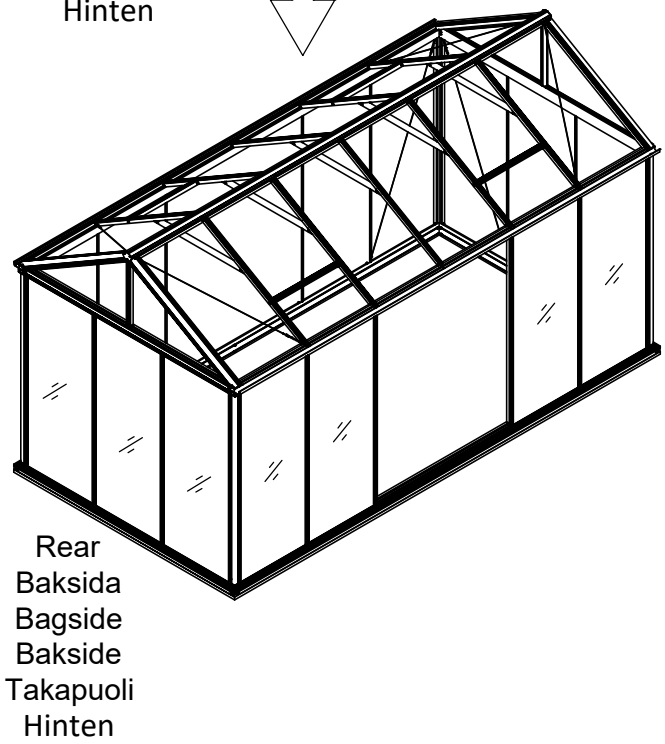

3002	3003	3004
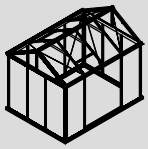	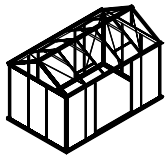	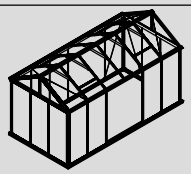

Part	Product	NO.	Length(MM)	QTY.	Code
	3002	40X-Y14	3149	2	A005
	3003	40X-Y15-5	3900		
	3004	40X-Y15-6	4651		

Part	NO.	QTY.	Length(MM)
	40X-Y15-3	2	2398

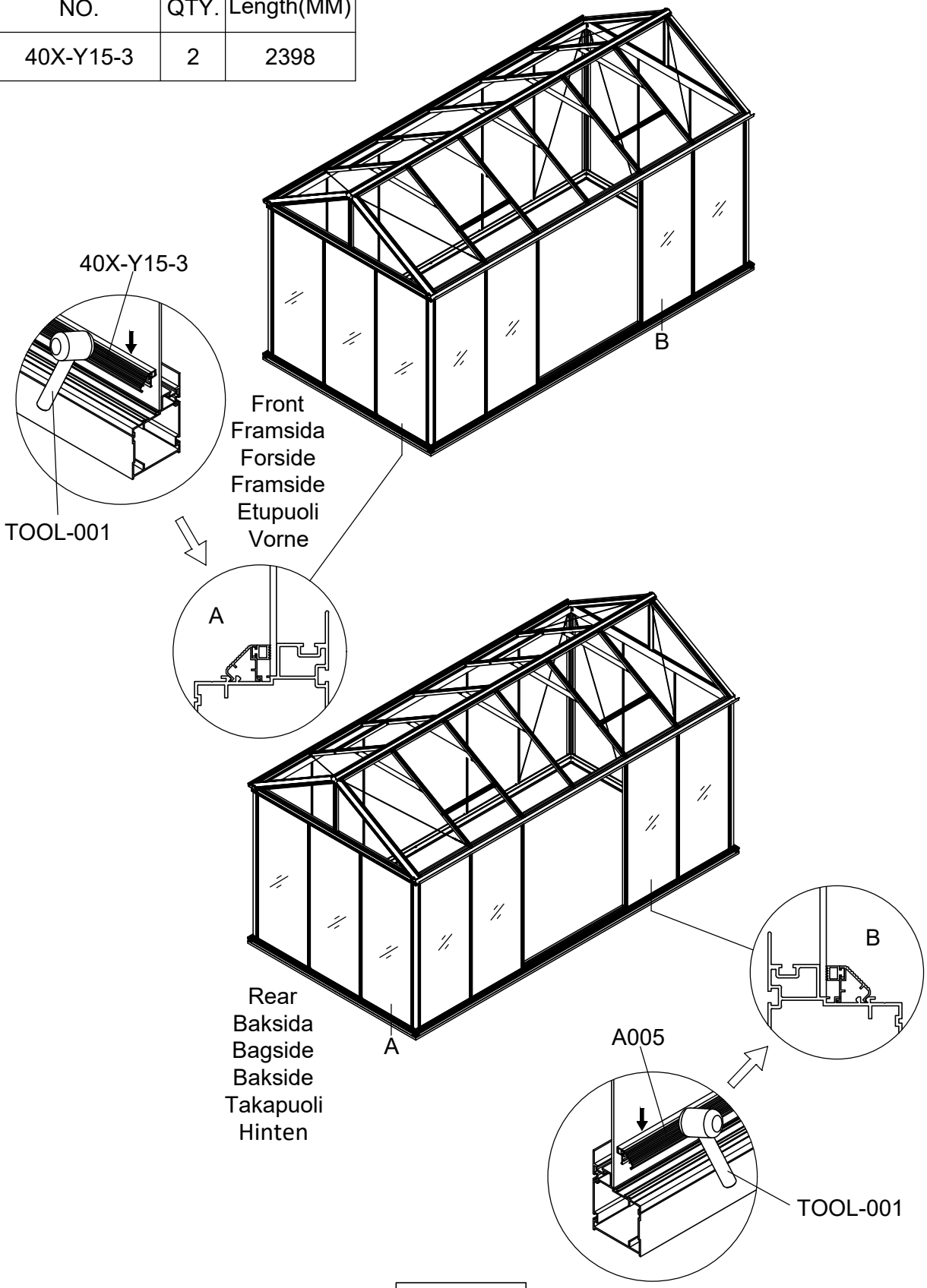

Part	NO.	QTY.			Length(MM)
		3002	3003	3004	
	40X-Y01	7	9	9	1809
	40X-Y02	1			1809

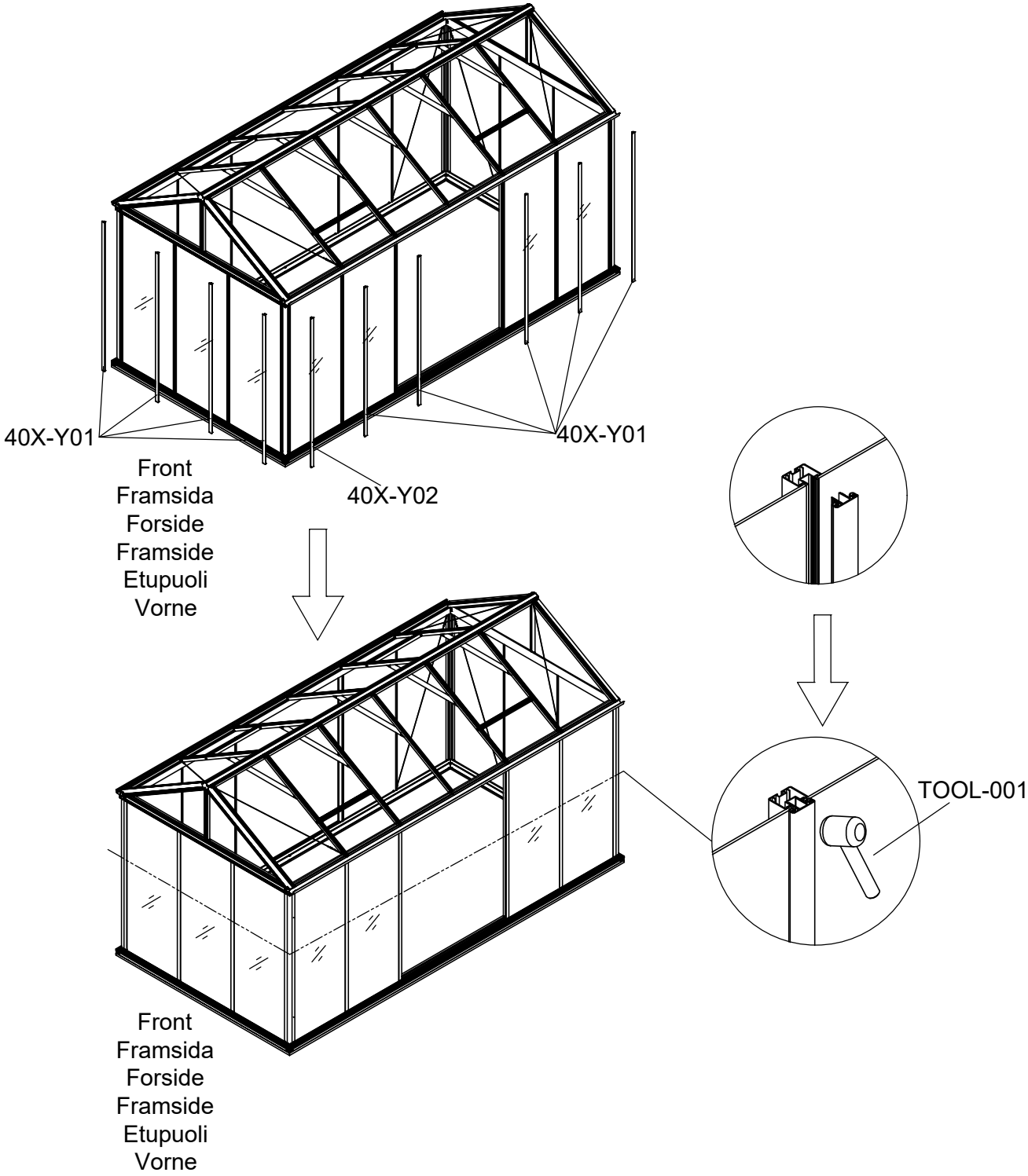

Part	NO.	QTY.			Length(MM)
		3002	3003	3004	
	40X-Y01	7	9	9	1809
	40X-Y02	1			1809

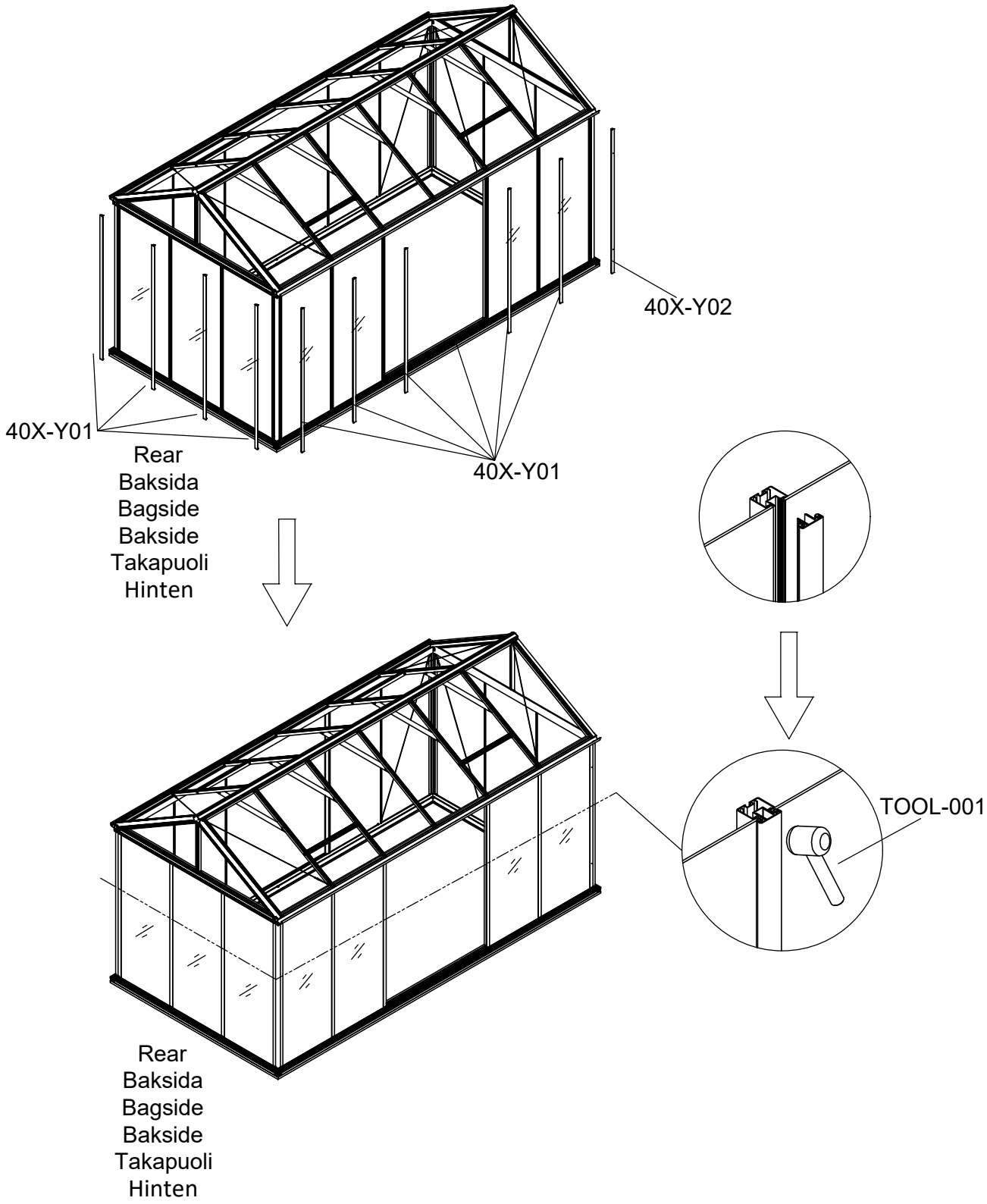

Part	NO.	QTY.			Length(MM)
		3002	3003	3004	
	7C26-007N	11M	12.5M	14M	

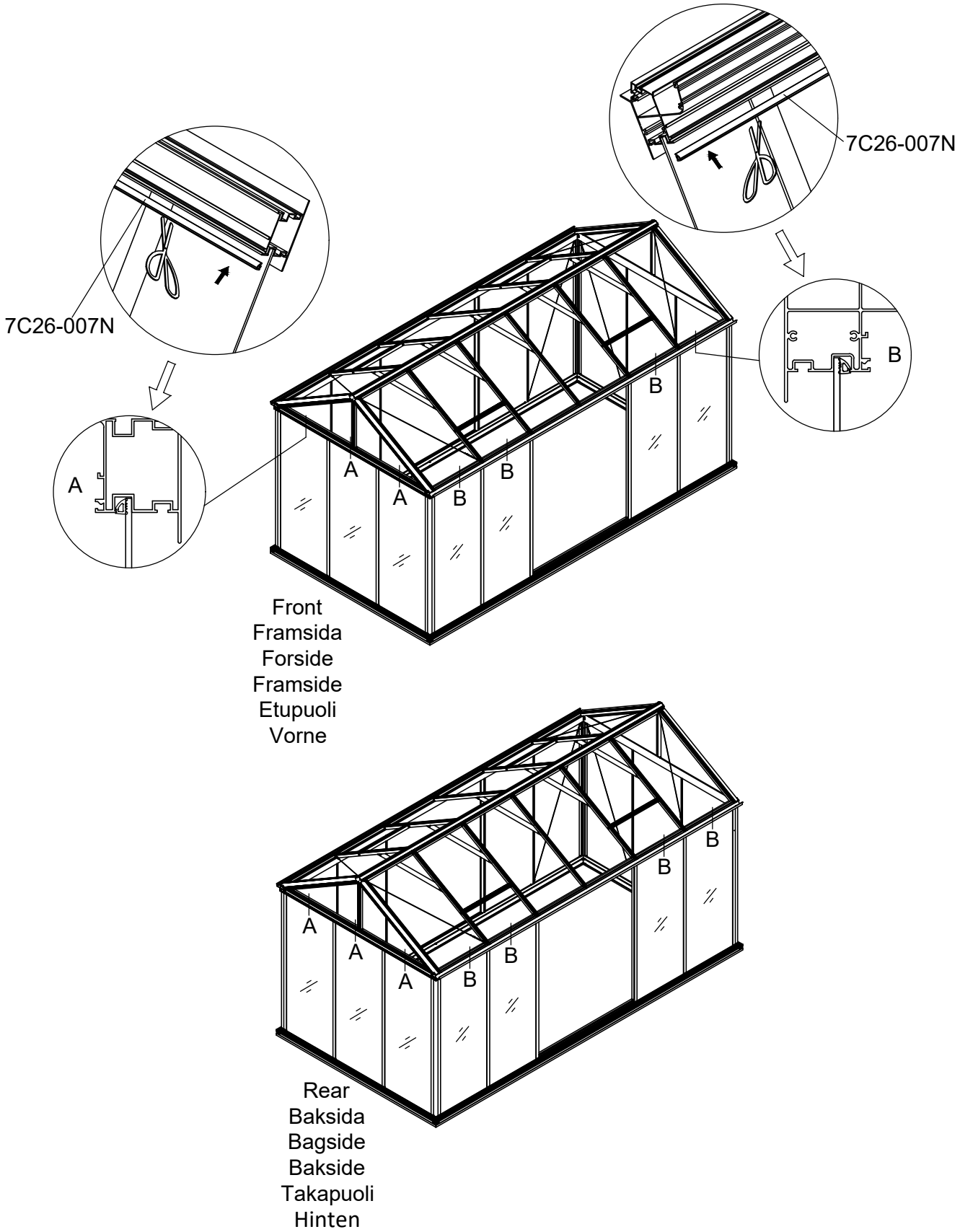

Part	NO.	QTY.	Length(MM)
	1073×635	2	1073

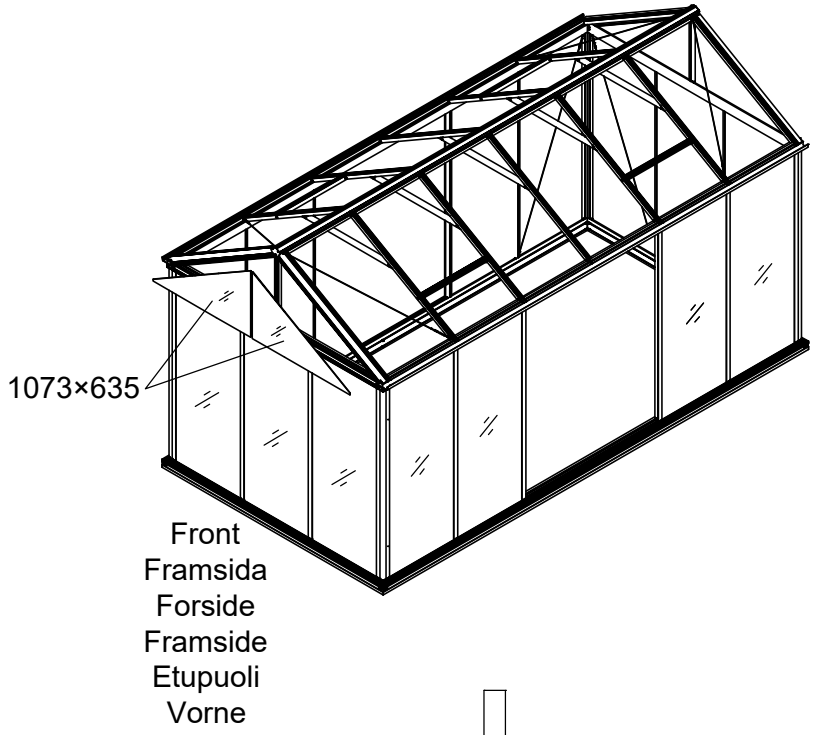

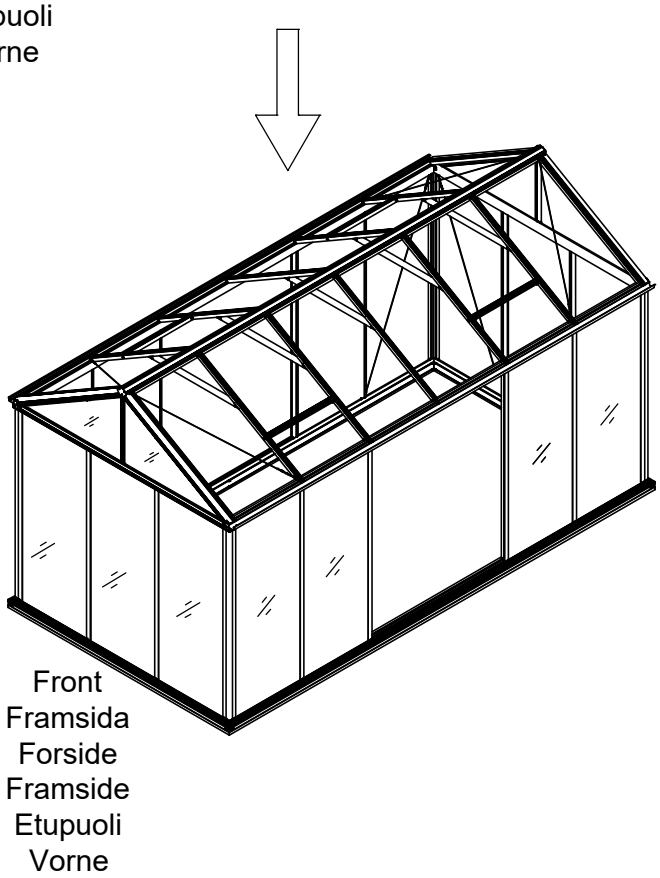

Part	NO.	QTY.	Length(MM)
	30X-Y03	1	642
	30X-Y05R	1	1281
	30X-Y05L	1	1281

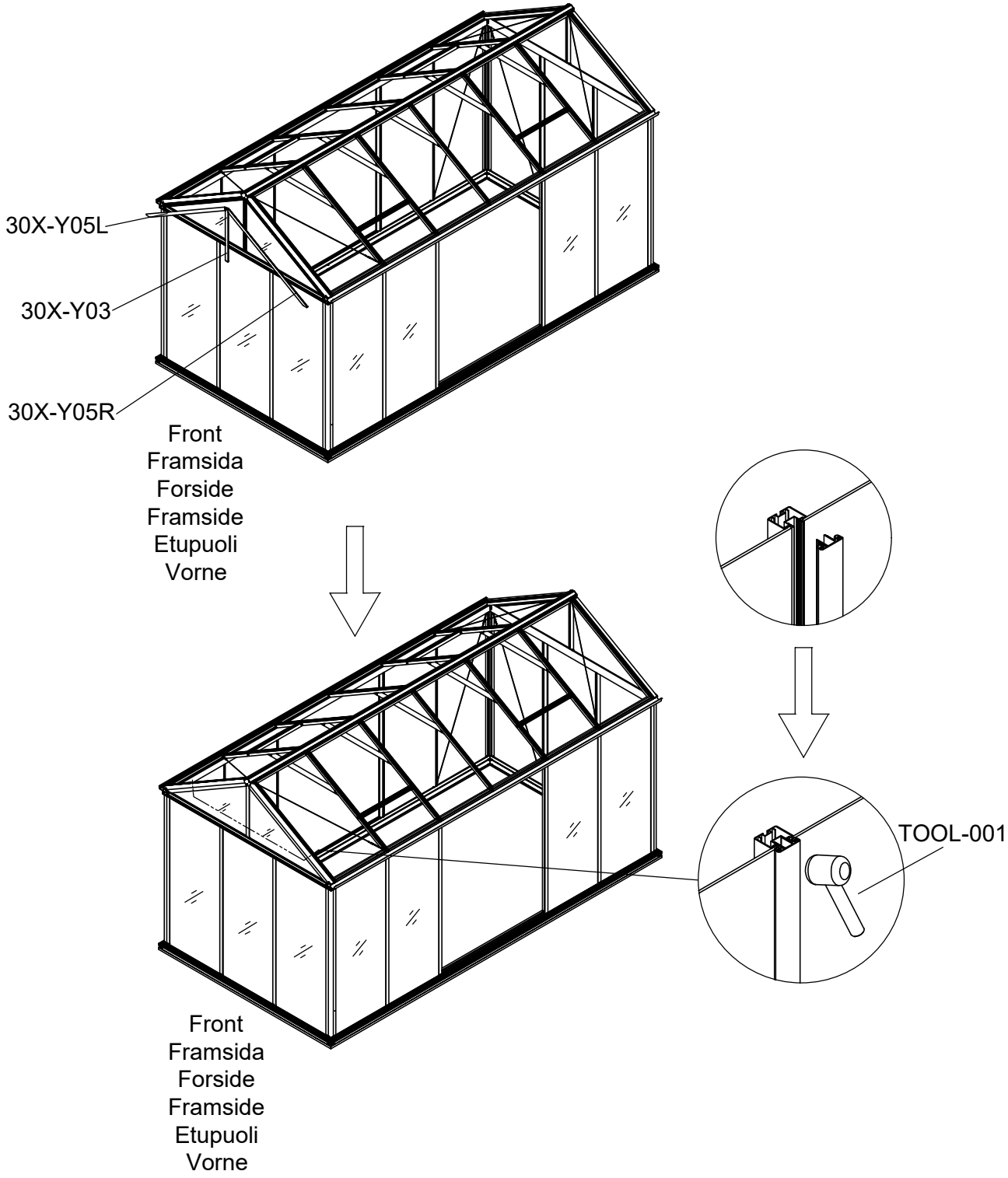

Part	NO.	QTY.	Length(MM)
	1073×635	2	1073

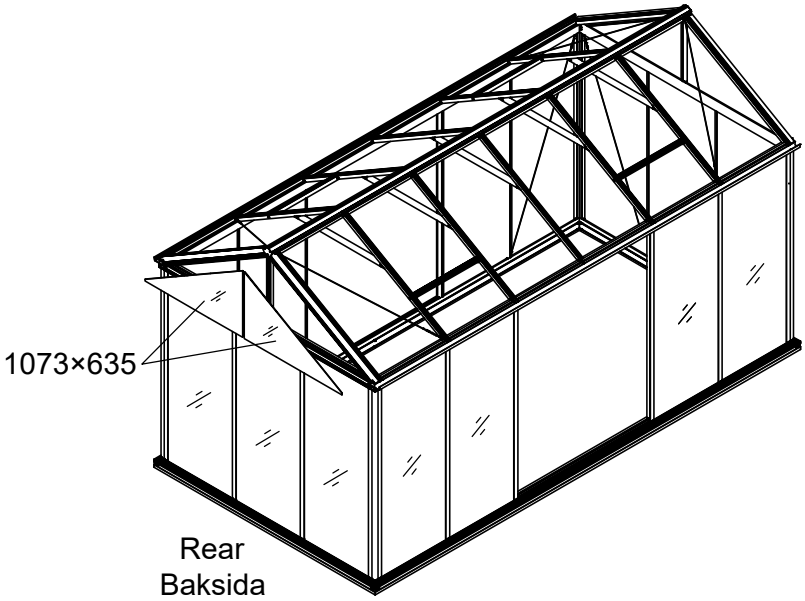

Rear
Baksida
Bagside
Bakside
Takapuoli
Hinten

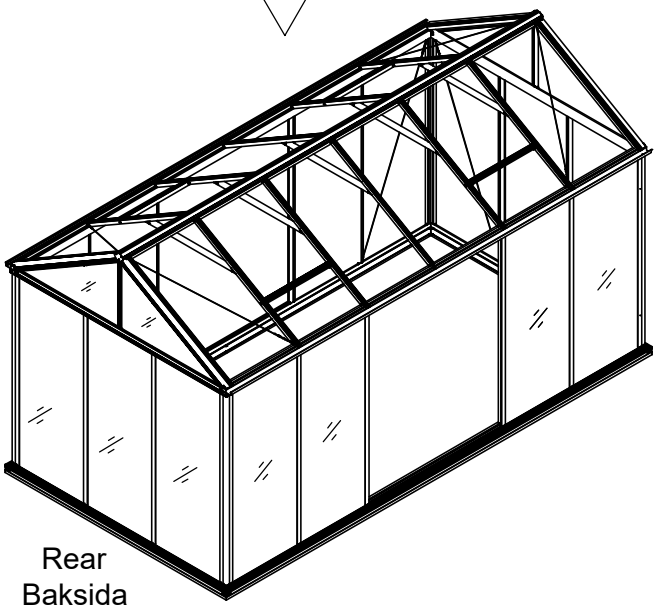

Rear
Baksida
Bagside
Bakside
Takapuoli
Hinten

Part	NO.	QTY.	Length(MM)
	30X-Y03	1	642
	30X-Y05R	1	1281
	30X-Y05L	1	1281

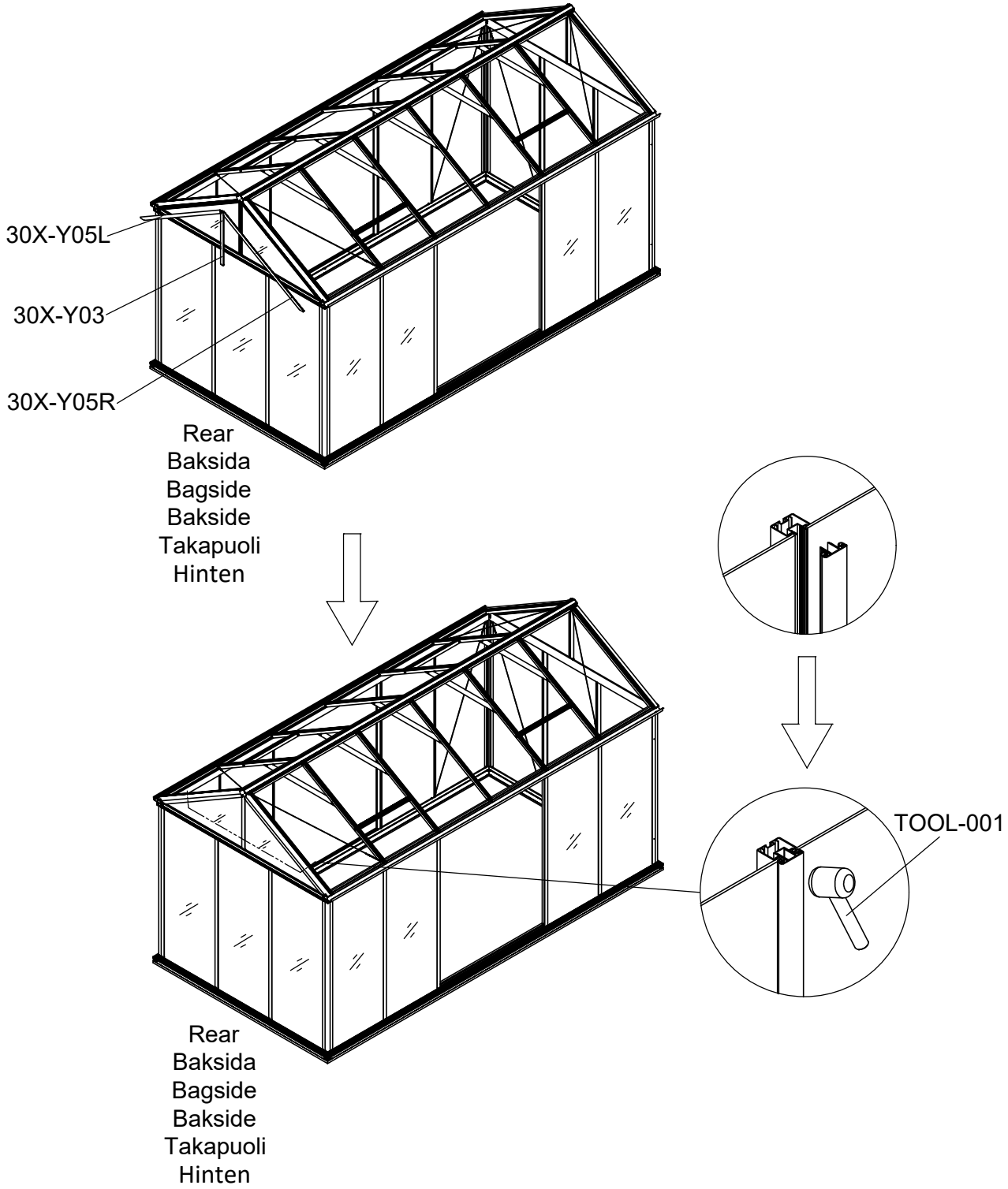

Part	NO.	QTY.			Length(MM)
		3002	3003	3004	
	730×1331	6	6	8	1331
	730×454	2	4	4	730

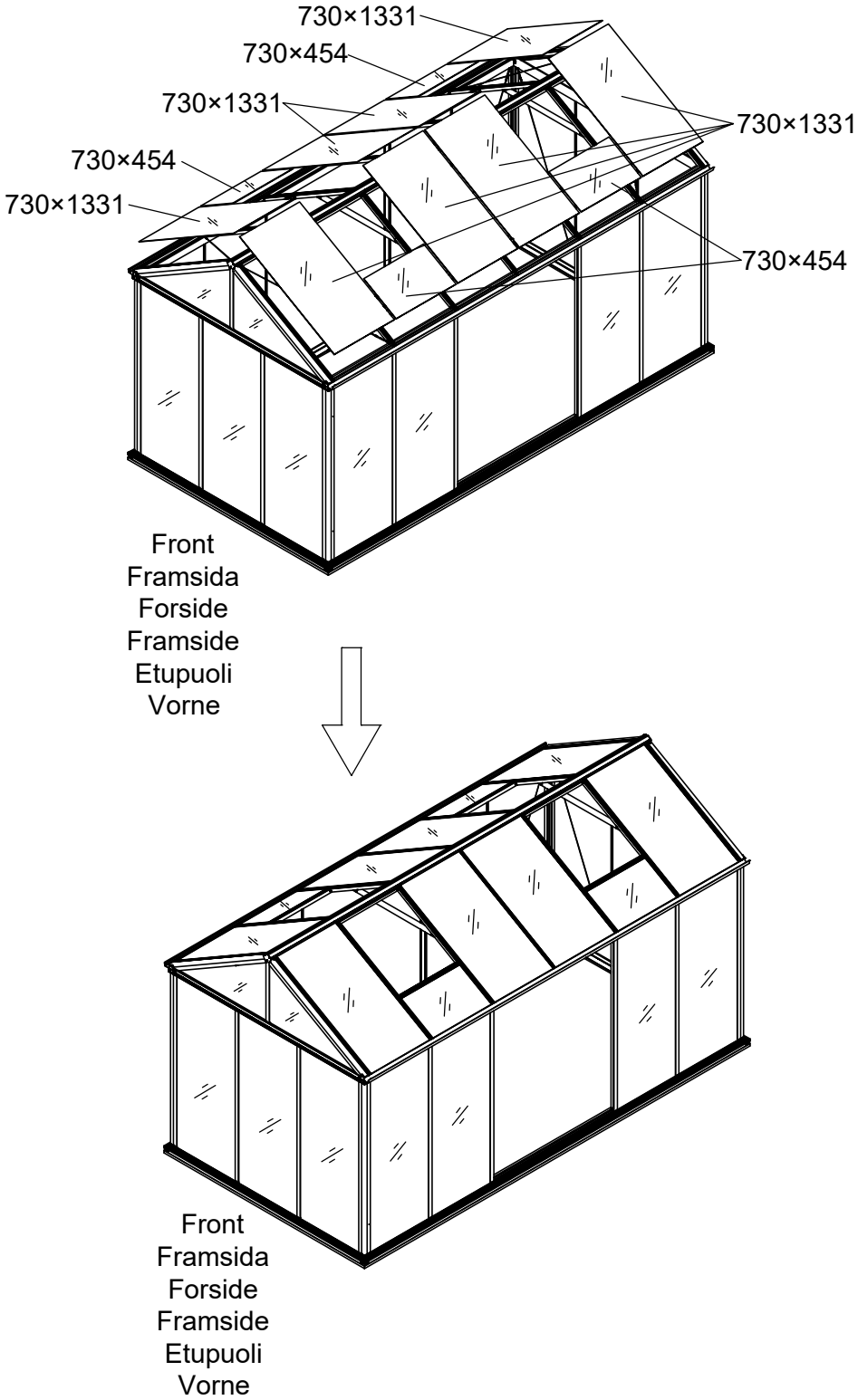

Part	NO.	QTY.			Length(MM)
		3002	3003	3004	
	30X-Y06	10	12	14	1321
	40X-Y07	2	4	4	712

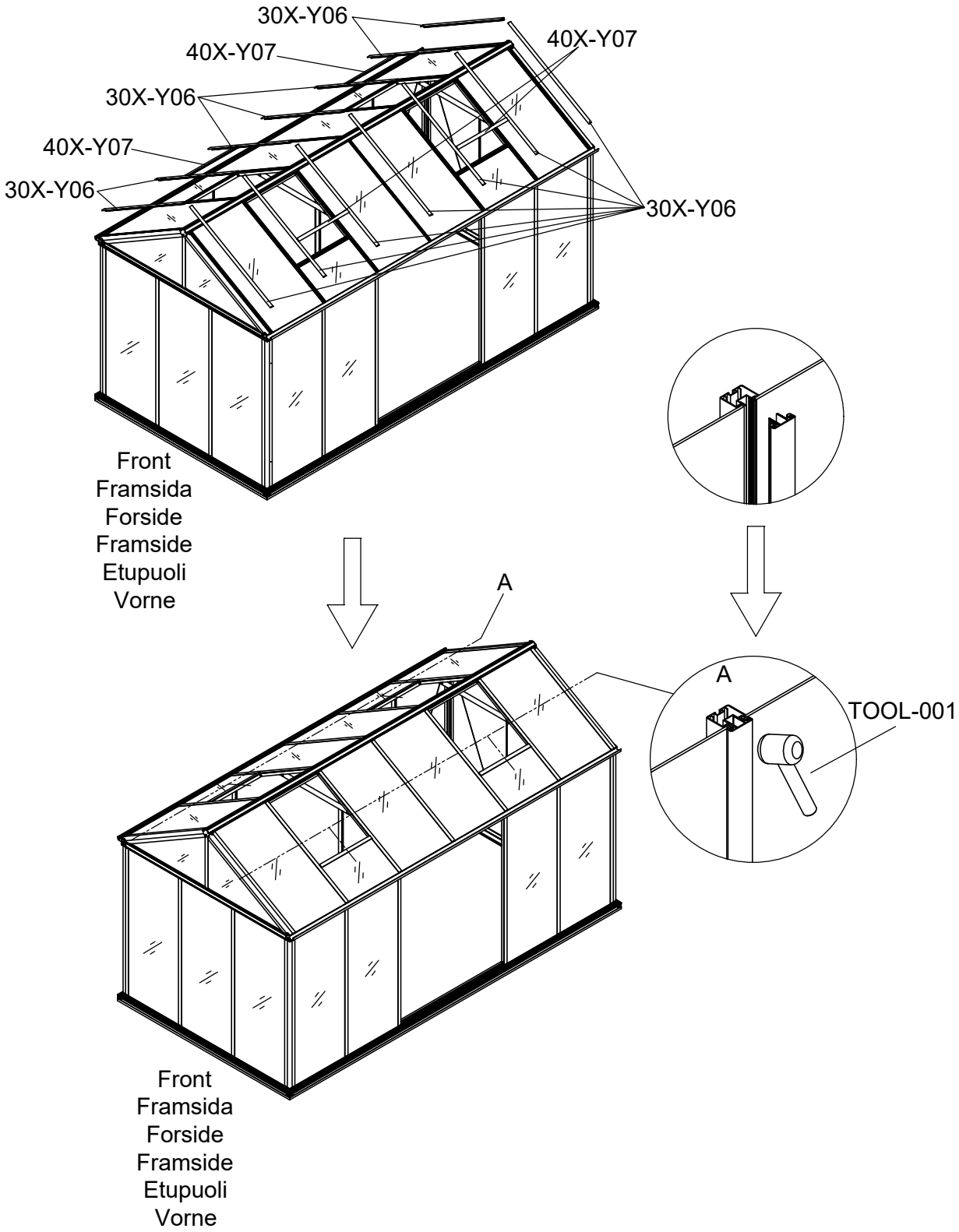

Part	NO.	QTY.			Length(MM)
		3002	3003	3004	
	7C26-009A	5M	5M	6.5M	
	7C26-007N	4.5M			

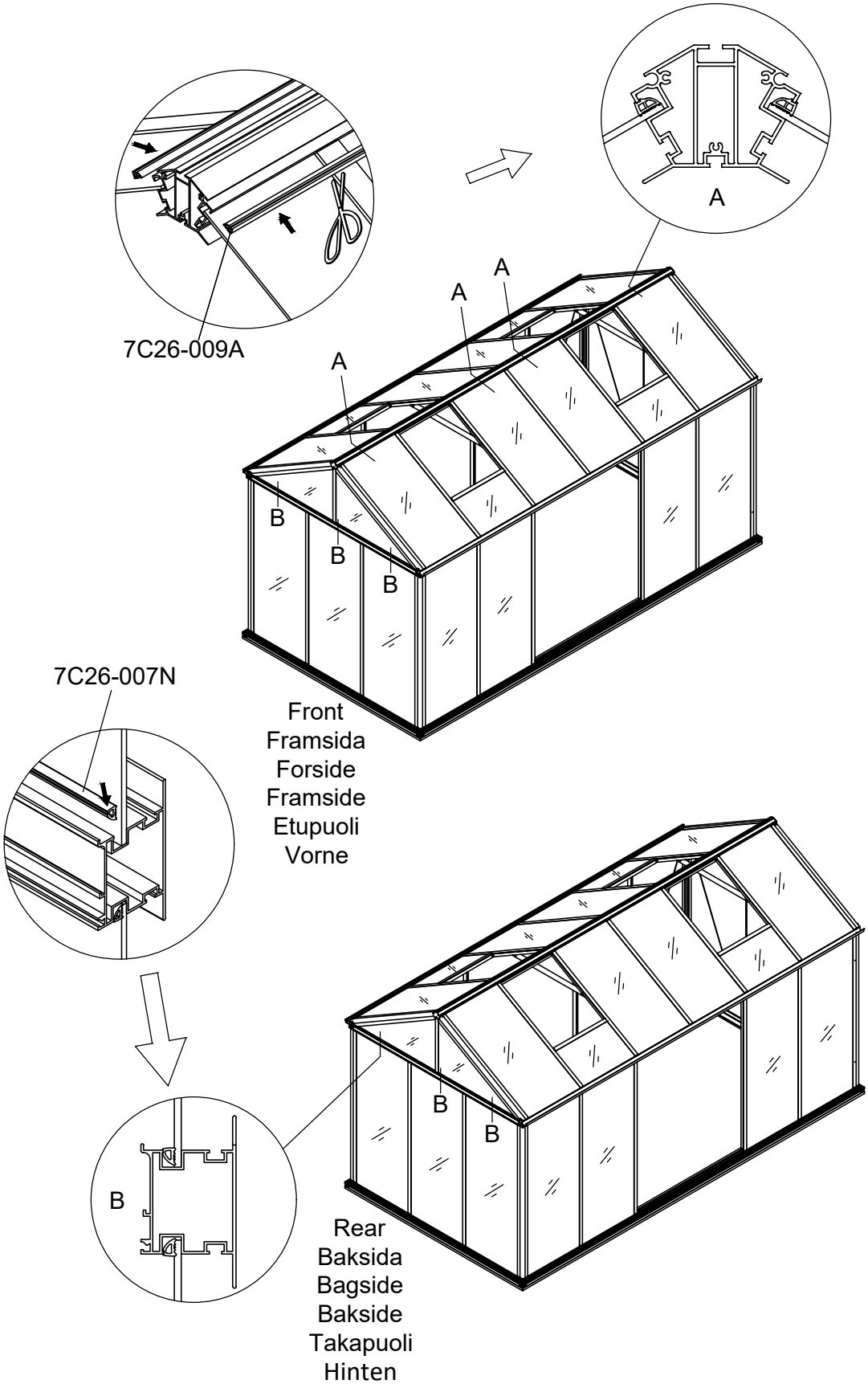

Part	Product	NO.	Length(MM)	CTN NO.	QTY.	Code
	3003	40X-Y62-5B	430	3013P-S-5	4	A009
	3004	40X-Y62-6B	806	3013P-S-6		

Part	NO.	QTY.	Length(MM)
	30X-Y60-AN	2	2272

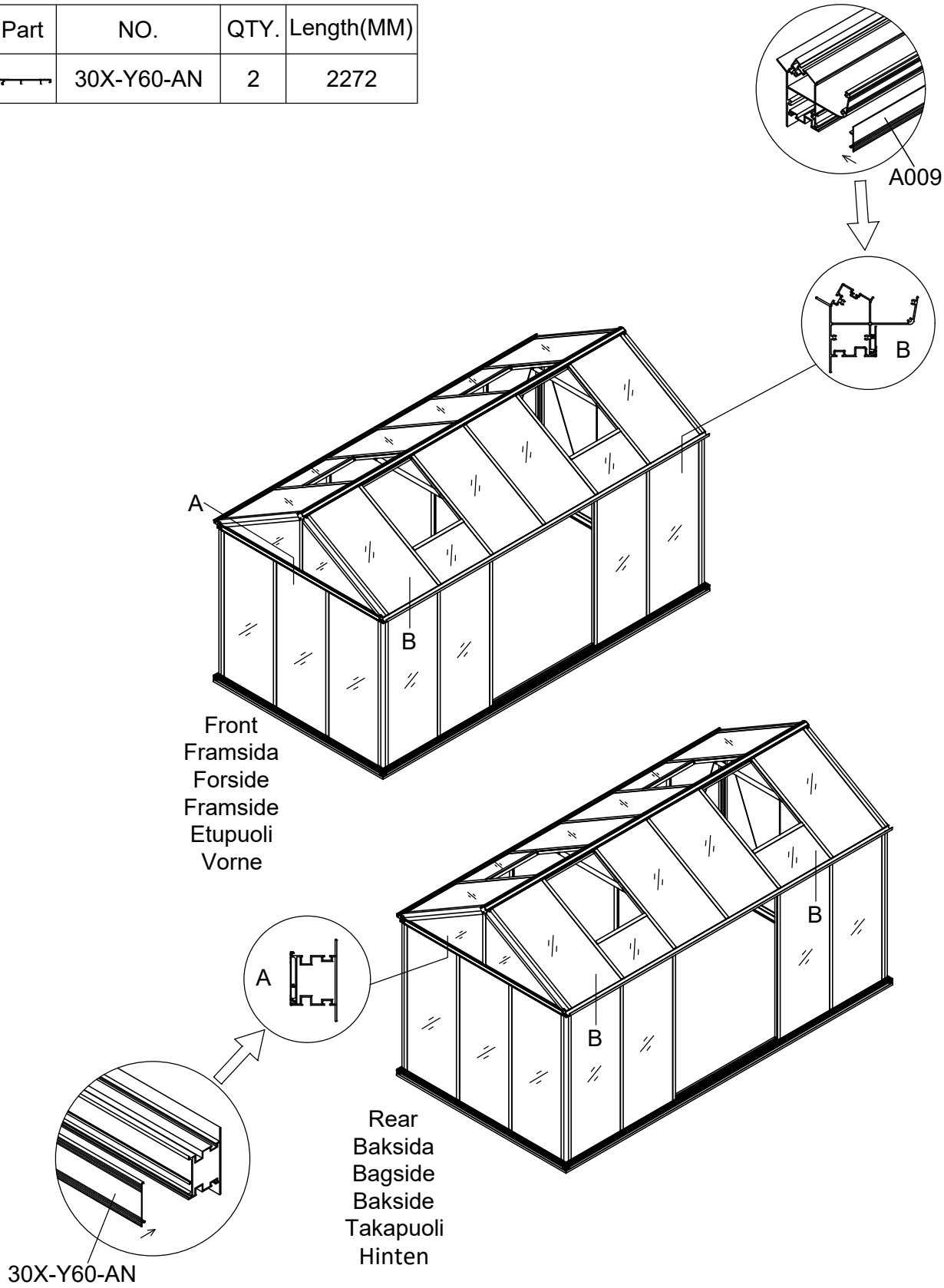

Part	NO.	QTY.	Length(MM)	CTN NO.
	40X-Y90	4	1805	3010P-DD
	40X-Y91R	2	1805	3010P-DD
	40X-Y91L	2	1805	3010P-DD
	40X-Y92R	2	767	3010P-DD
	40X-Y92L	2	767	3010P-DD
	40X-Y93	4	767	3010P-DD
	W03	16	30	3010P-DD
	W04	32	PCS	3010P-DD

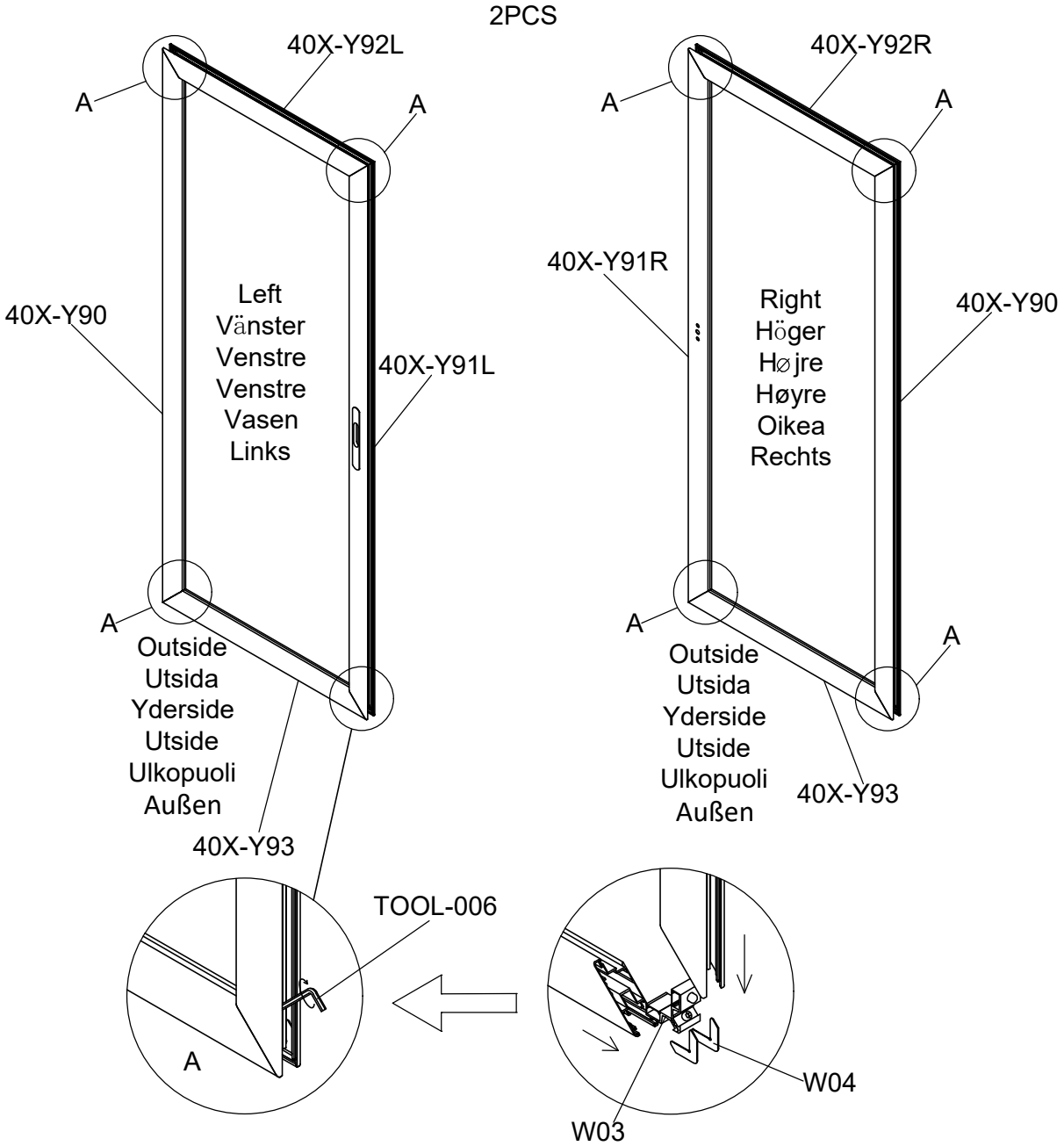

Part	NO.	QTY.	Length(MM)
	657×1695	2	1695

Part	NO.	QTY.	Length(MM)	CTN NO.
	40X-Y95	4	1704	3010P-DD
	40X-Y96	4	666	3010P-DD

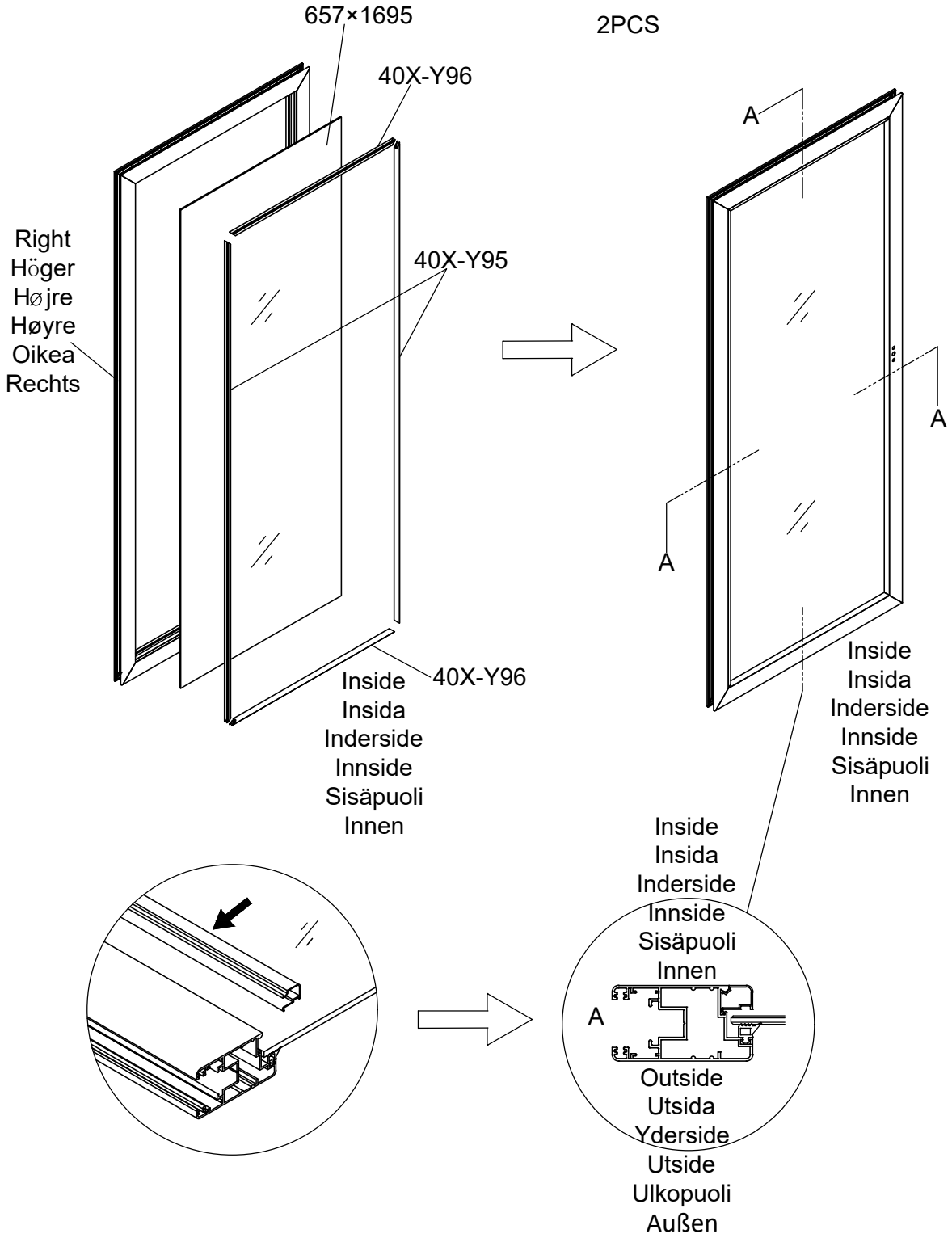

Part	NO.	QTY.	Length(MM)
	657×1695	2	1695

Part	NO.	QTY.	Length(MM)	CTN NO.
	40X-Y95	4	1704	3010P-DD
	40X-Y96	4	666	3010P-DD

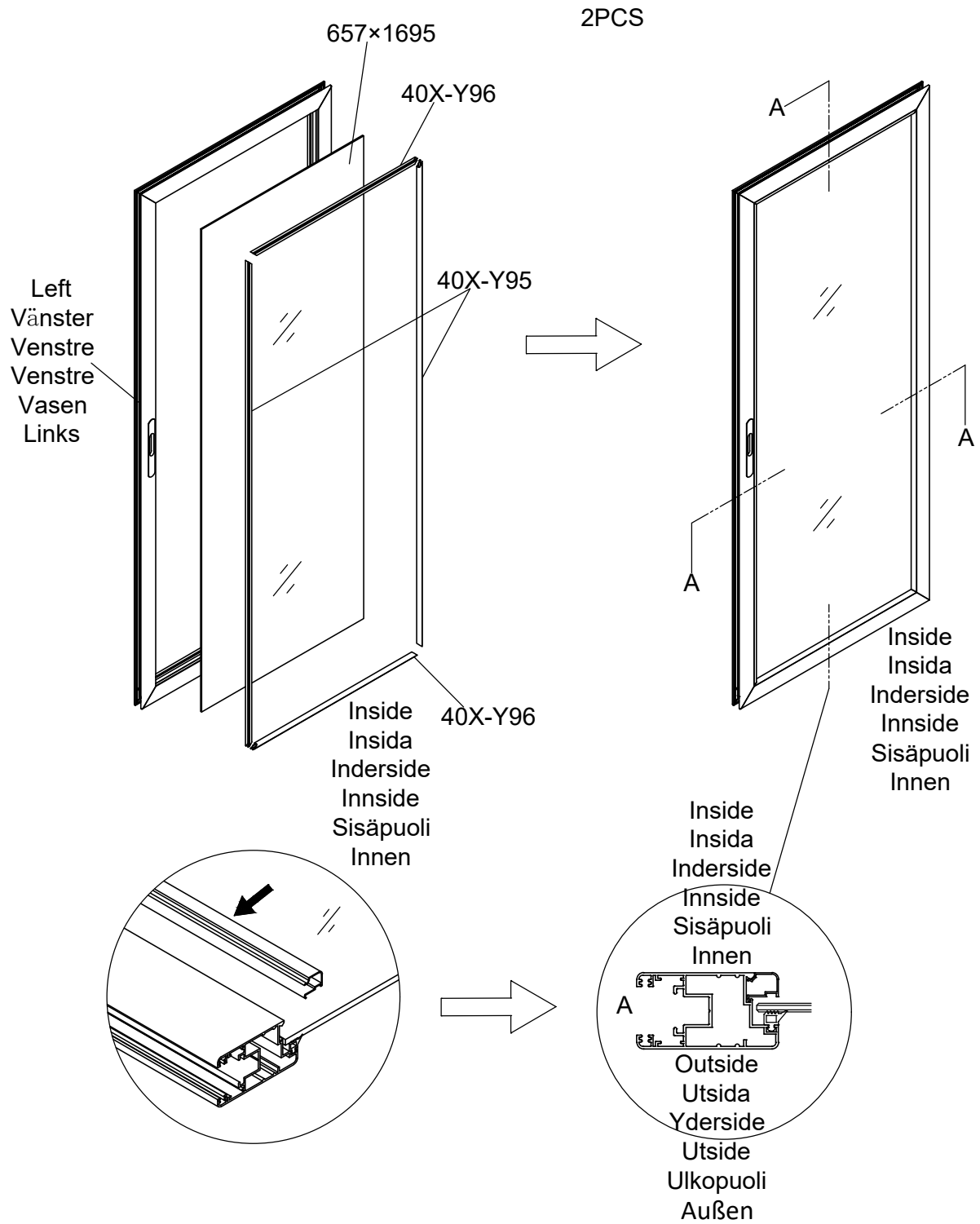

Part	NO.	QTY.	Length(MM)	CTN NO.
	MCJT002	22M		3010P-DD

2PCS

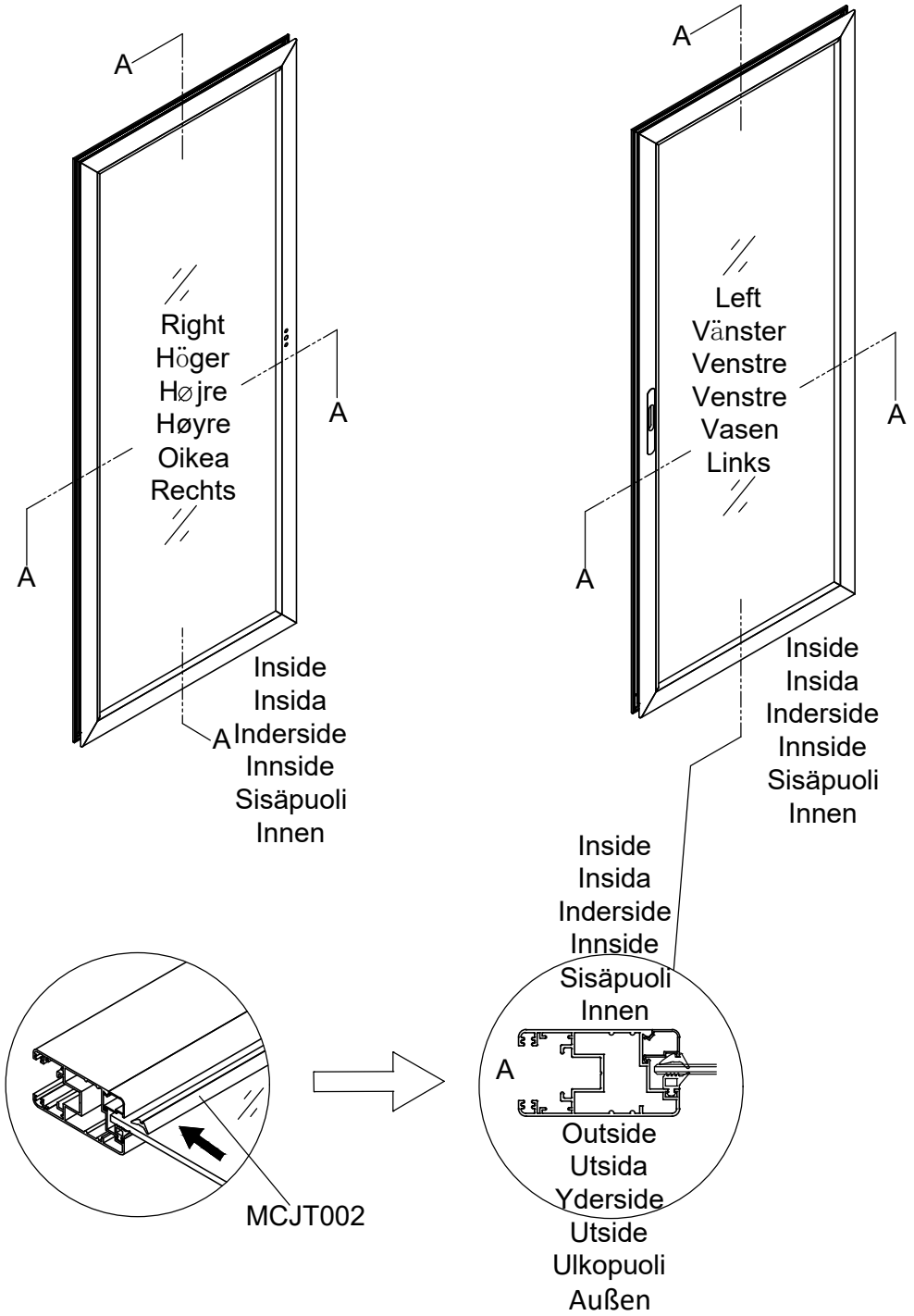

Part	NO.	QTY.	Length(MM)	CTN NO.
	40X-Y97R-C	2	1799	3010P-DD
	NS1106A	2	1790	3010P-DD
	Z4.2-13	8	PCS	3010P-DD

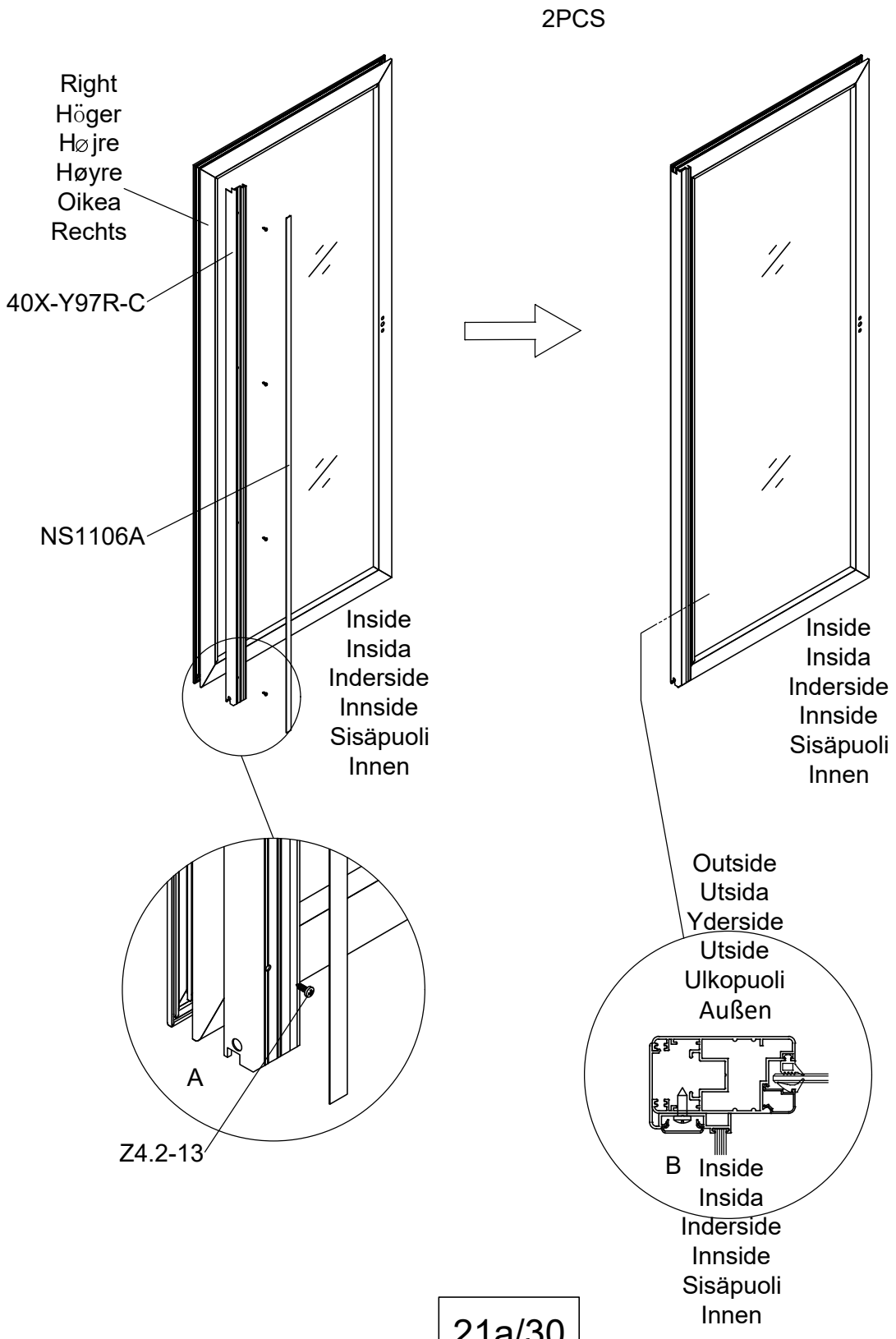

Part	NO.	QTY.	Length(MM)	CTN NO.
	40X-Y97L-C	2	1799	3010P-DD
	NS1106A	2	1790	3010P-DD
	Z4.2-13	8	PCS	3010P-DD

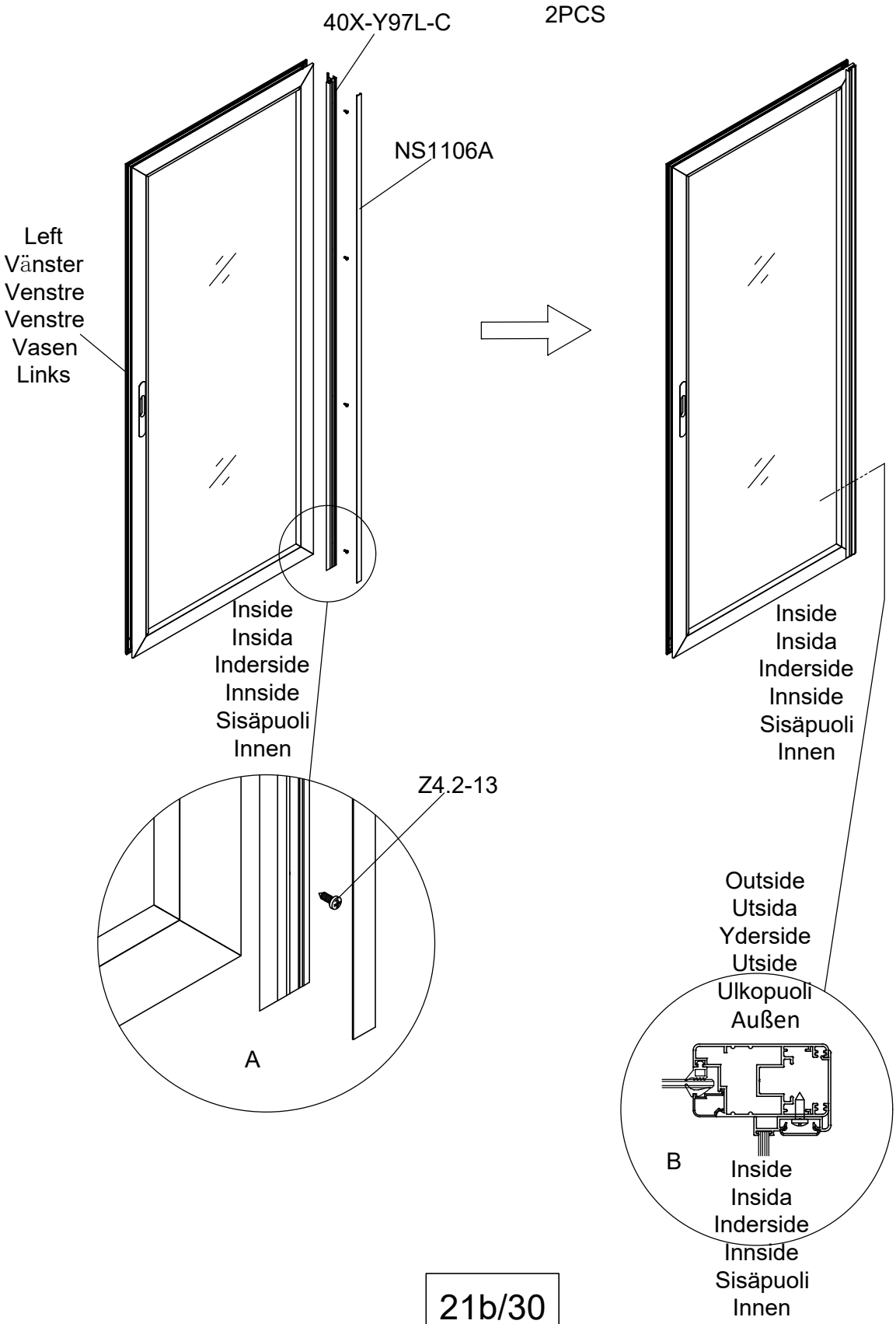

Part	NO.	QTY.	Length(MM)	CTN NO.
	40X-Y94	2	1774	3010P-DD
	NSST120	3.8M		3010P-DD
	T04	4	PCS	3010P-DD
	Z4.2-38	6	PCS	3010P-DD
	Z3.5-25	8	PCS	3010P-DD

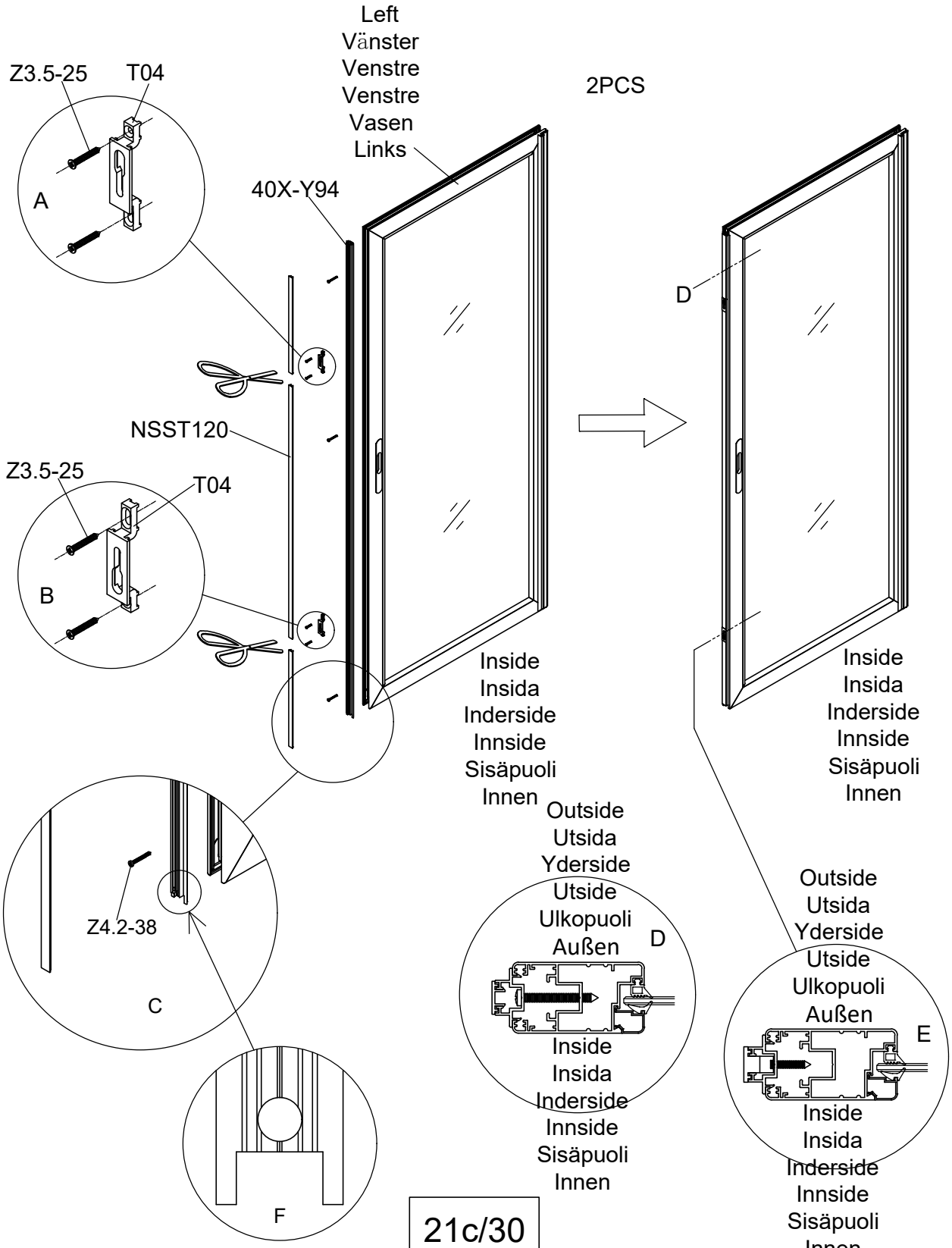

Part	NO.	QTY.	Length(MM)	CTN NO.
	40X-Y64	1	3016	3010P-DD
	40X-Y17	1	2890	3010P-DD
	7C28-004	5	PCS	3010P-DD
	Z4.2-50	5	PCS	3010P-DD
	Z4.2-13	6	PCS	3010P-DD

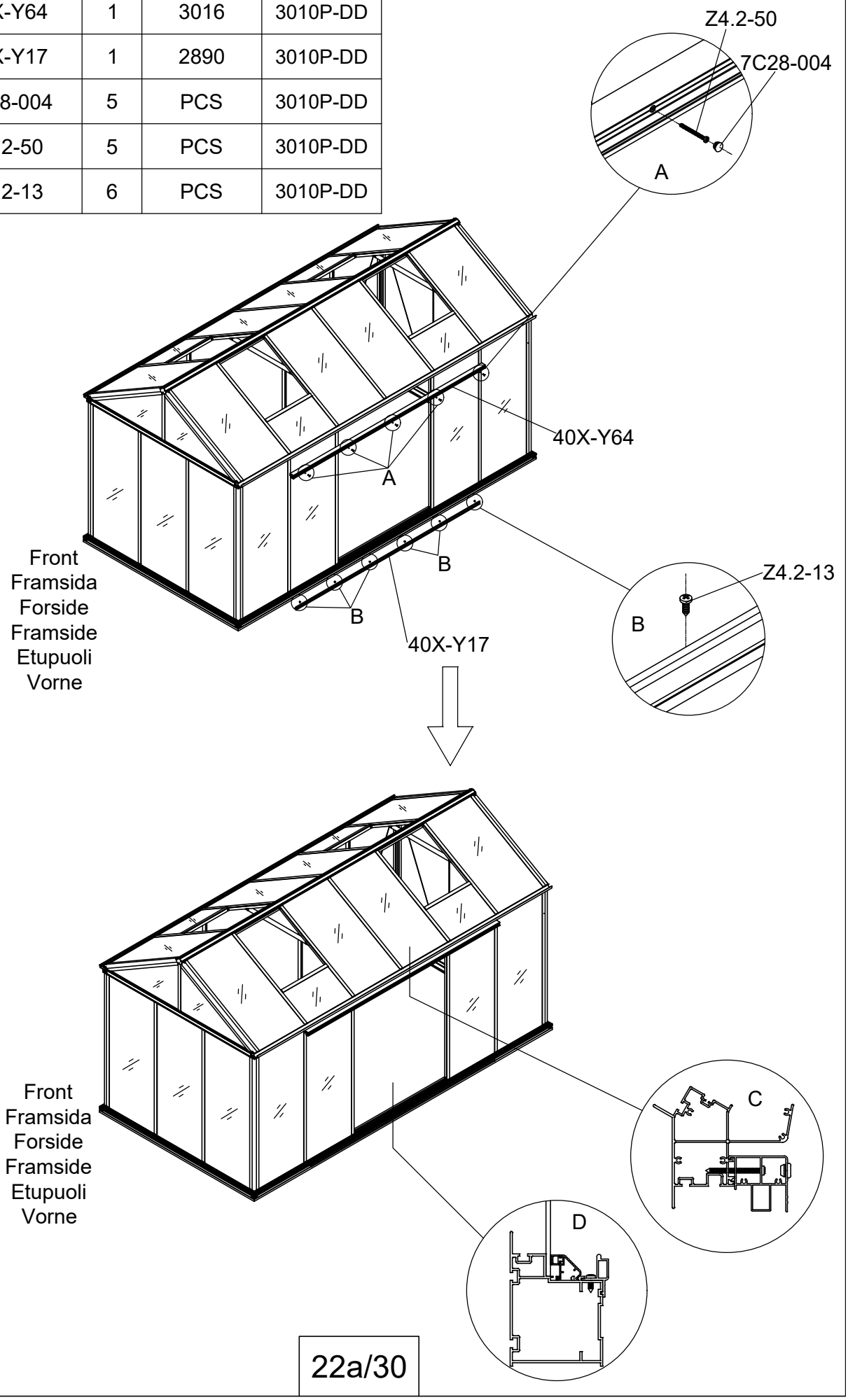

Part	NO.	QTY.	Length(MM)	CTN NO.
	40X-Y64	1	3016	3010P-DD
	40X-Y17	1	2890	3010P-DD
	7C28-004	5	PCS	3010P-DD
	Z4.2-50	5	PCS	3010P-DD
	Z4.2-13	6	PCS	3010P-DD

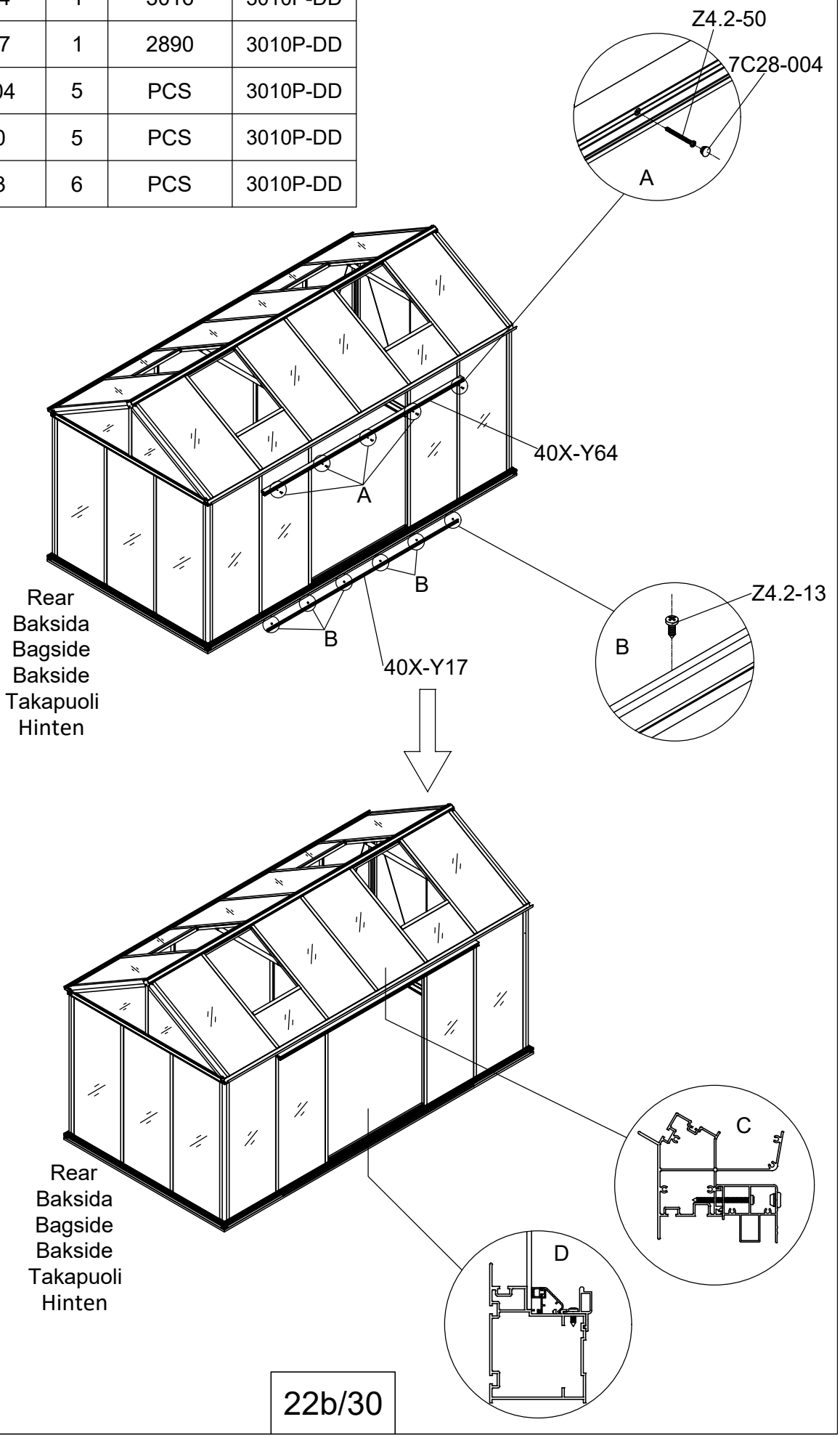

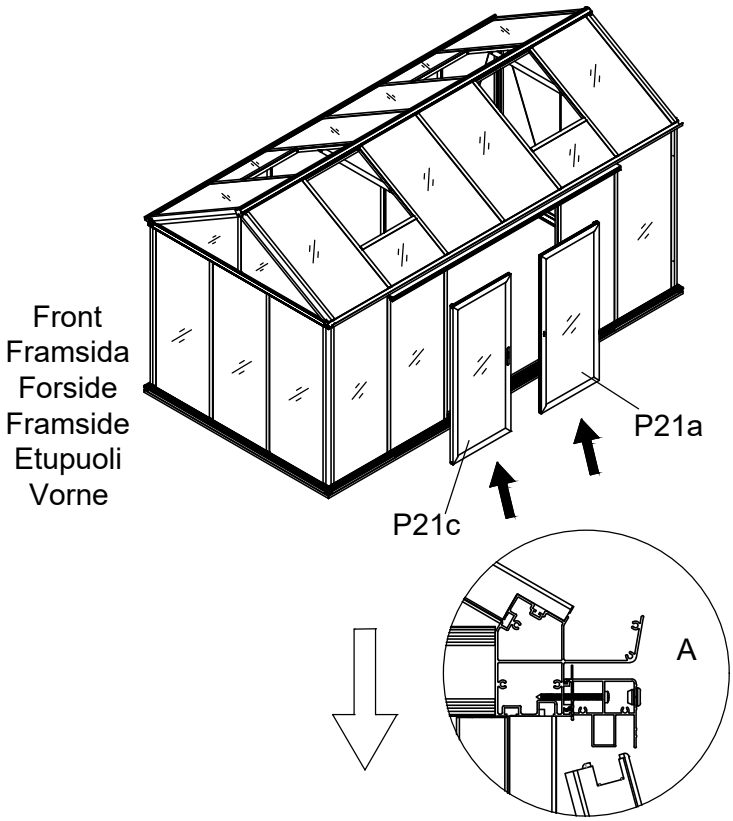
Front
Framsida
Forside
Framside
Etupuoli
Vorne
P21a
P21c
A

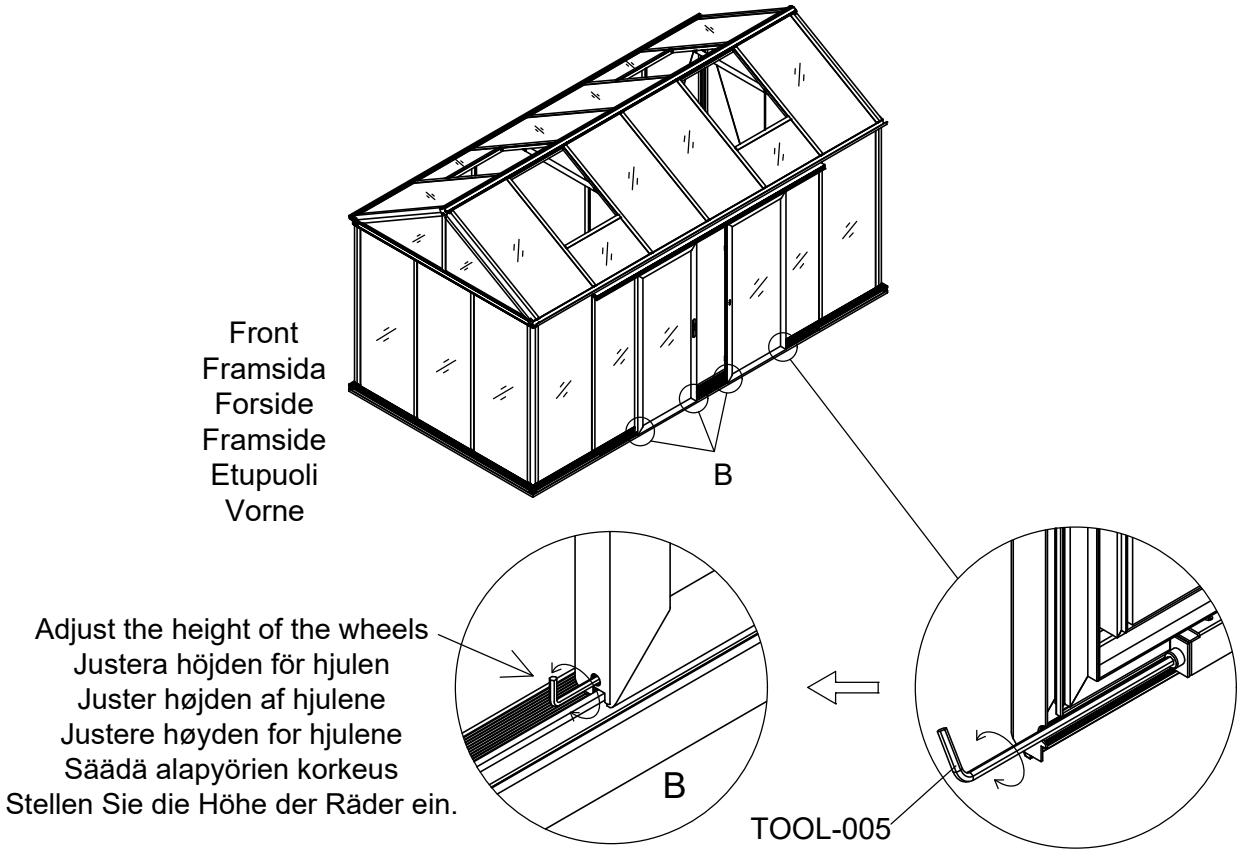
Front
Framsida
Forside
Framside
Etupuoli
Vorne
B
Adjust the height of the wheels
Justera höjden för hjulen
Juster højden af hjulene
Justere høyden for hjulene
Säädä alapyörien korkeus
Stellen Sie die Höhe der Räder ein.
B
TOOL-005

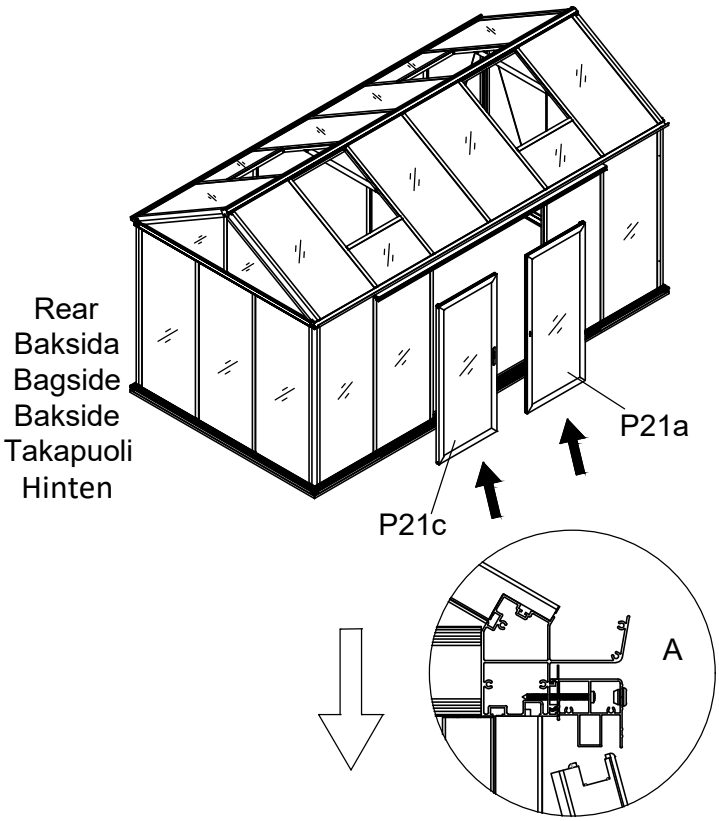
Rear
Baksida
Bagside
Bakside
Takapuoli
Hinten
P21a
P21c
A

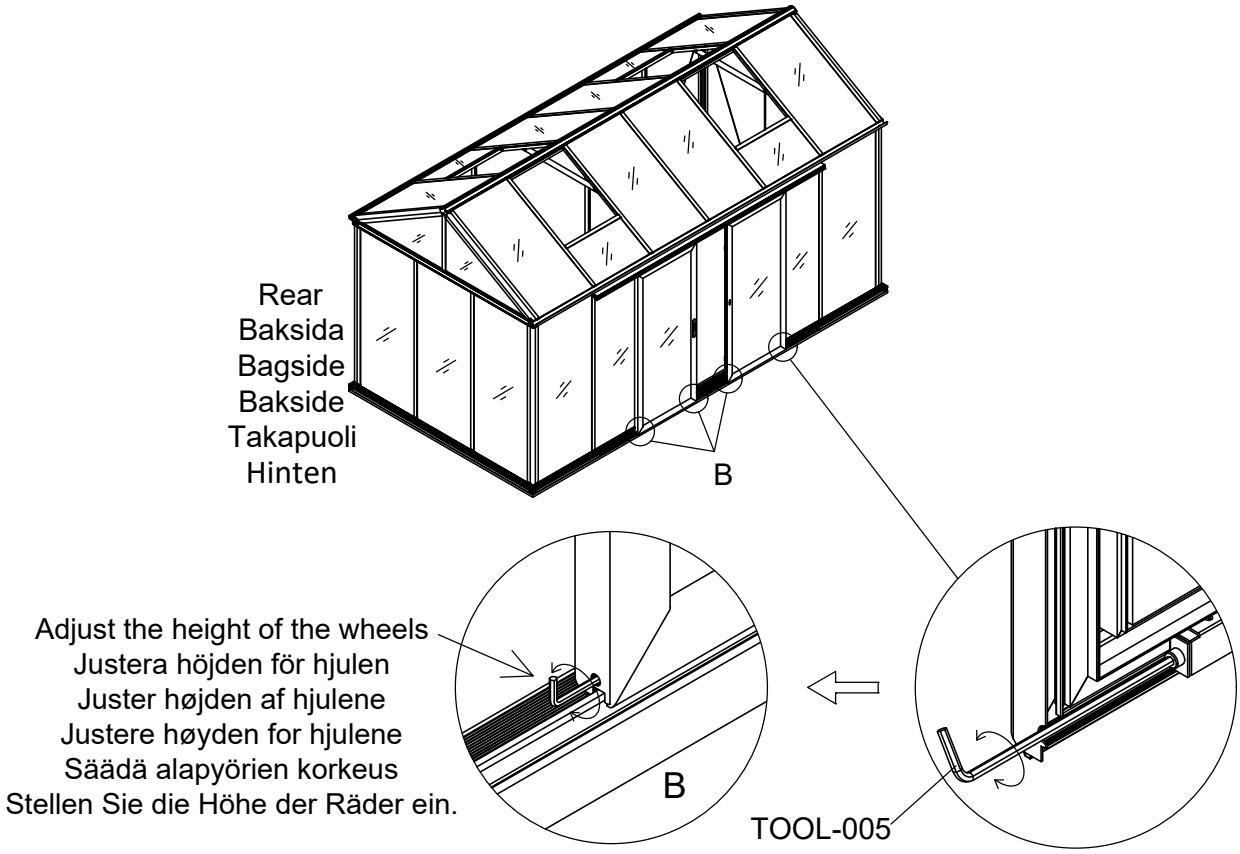
Rear
Baksida
Bagside
Bakside
Takapuoli
Hinten
B
Adjust the height of the wheels
Justera höjden för hjulen
Juster højden af hjulene
Justere høyden for hjulene
Säädä alapyörien korkeus
Stellen Sie die Höhe der Räder ein.
B
TOOL-005

Part	NO.	QTY.	Length(MM)	CTN NO.
	T01	1	PCS	3010P-DD
	T01A	1	PCS	3010P-DD
	J02	2	PCS	3010P-DD
	T08	2	PCS	3010P-DD
	M4-40	2	PCS	3010P-DD
	Mi4-17	2	PCS	3010P-DD
	Z3.5-25	4	PCS	3010P-DD
	Z4.2-13	4	PCS	3010P-DD

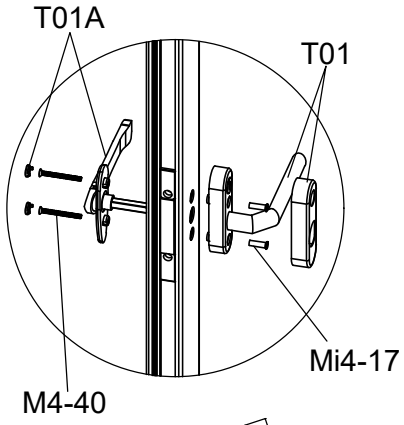

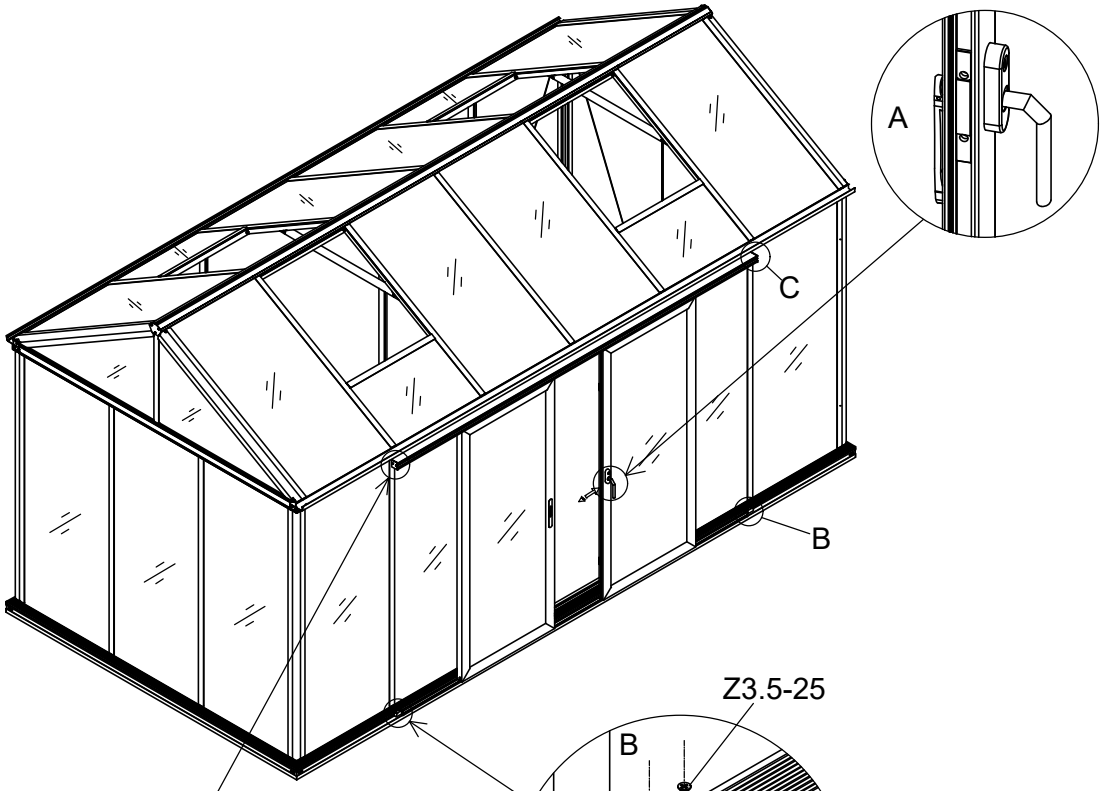

Front
Framsida
Forside
Framside
Etupuoli
Vorne

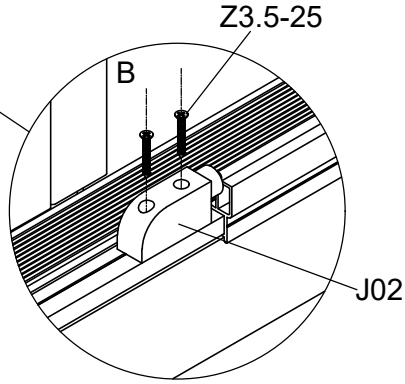

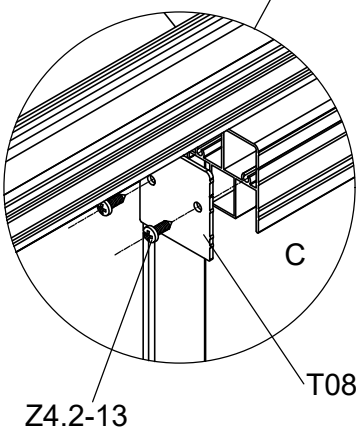

Part	NO.	QTY.	Length(MM)	CTN NO.
	T01	1	PCS	3010P-DD
	T01A	1	PCS	3010P-DD
	J02	2	PCS	3010P-DD
	T08	2	PCS	3010P-DD
	M4-40	2	PCS	3010P-DD
	Mi4-17	2	PCS	3010P-DD
	Z3.5-25	4	PCS	3010P-DD
	Z4.2-13	4	PCS	3010P-DD

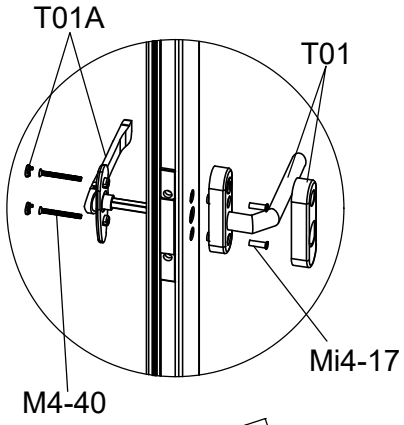

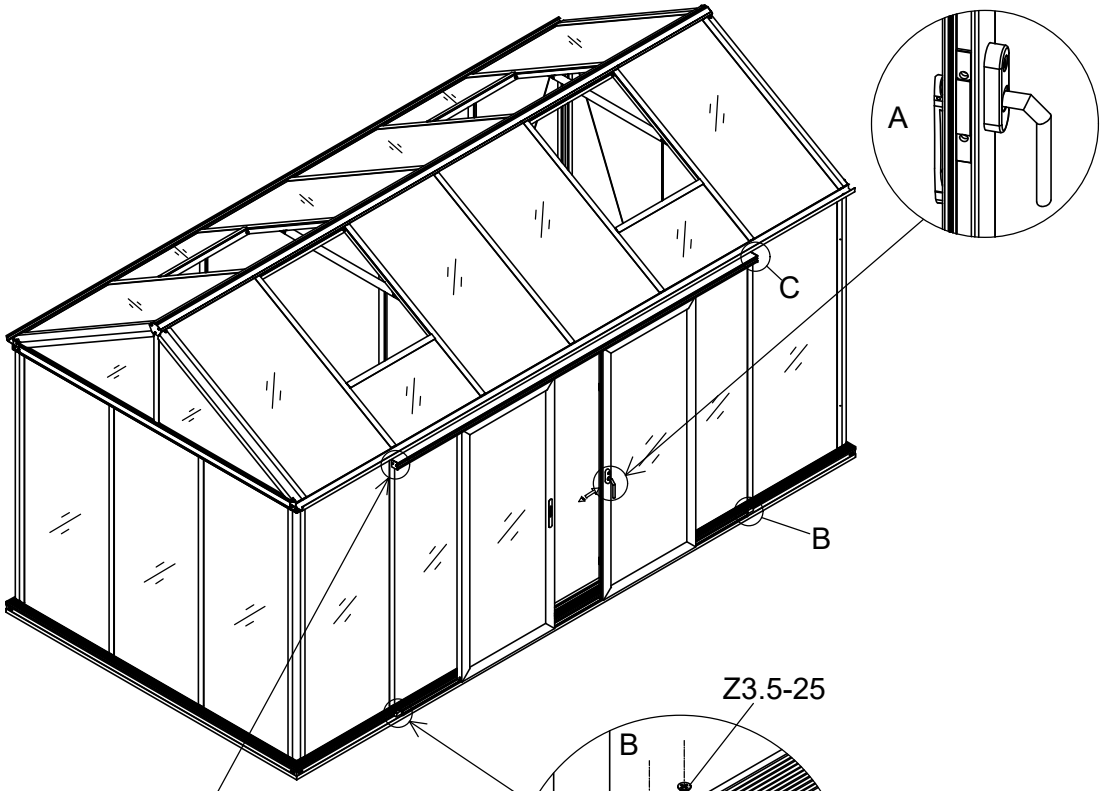

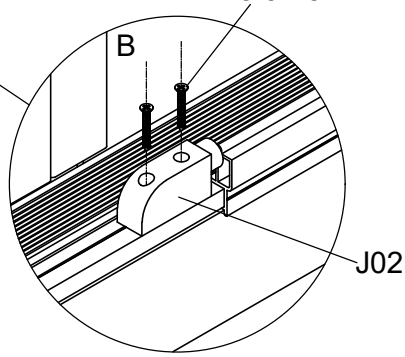

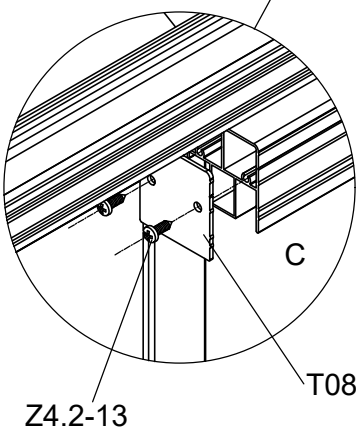

Part	NO.	QTY.			Length(MM)
		3002	3003	3004	
	40X-Y80E-A	2	4	4	801
	40X-Y81E	4	8	8	882
	40X-Y82E	2	4	4	801
	W06	8	16	16	46
	W04	8	16	16	PCS
	782×863	2	4	4	863
	MCJT002	4	8	8	12

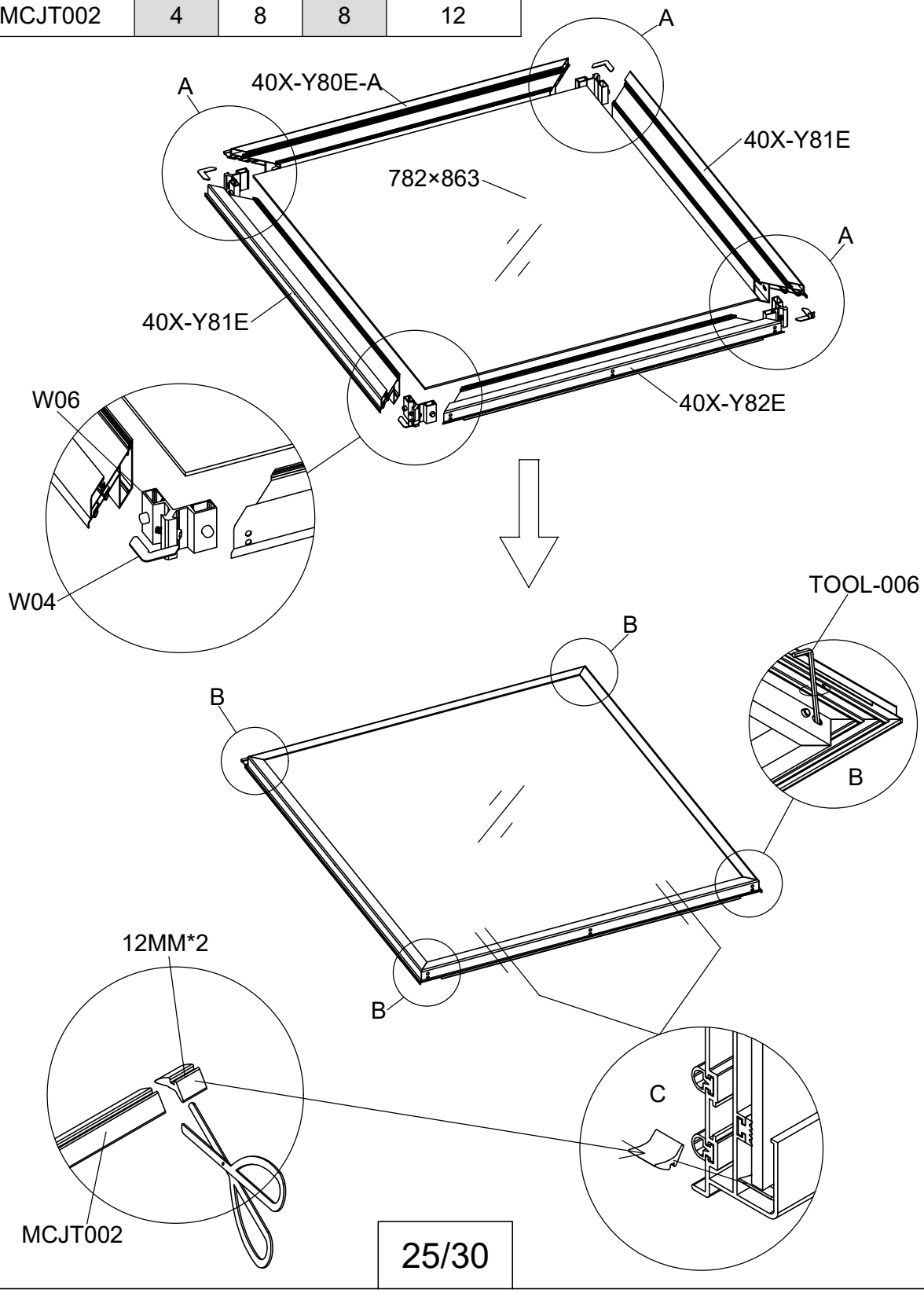

Part	NO.	QTY.			Length(MM)
		3002	3003	3004	
	MCJT002	7M	14M	14M	
	J09	16	32	32	PCS

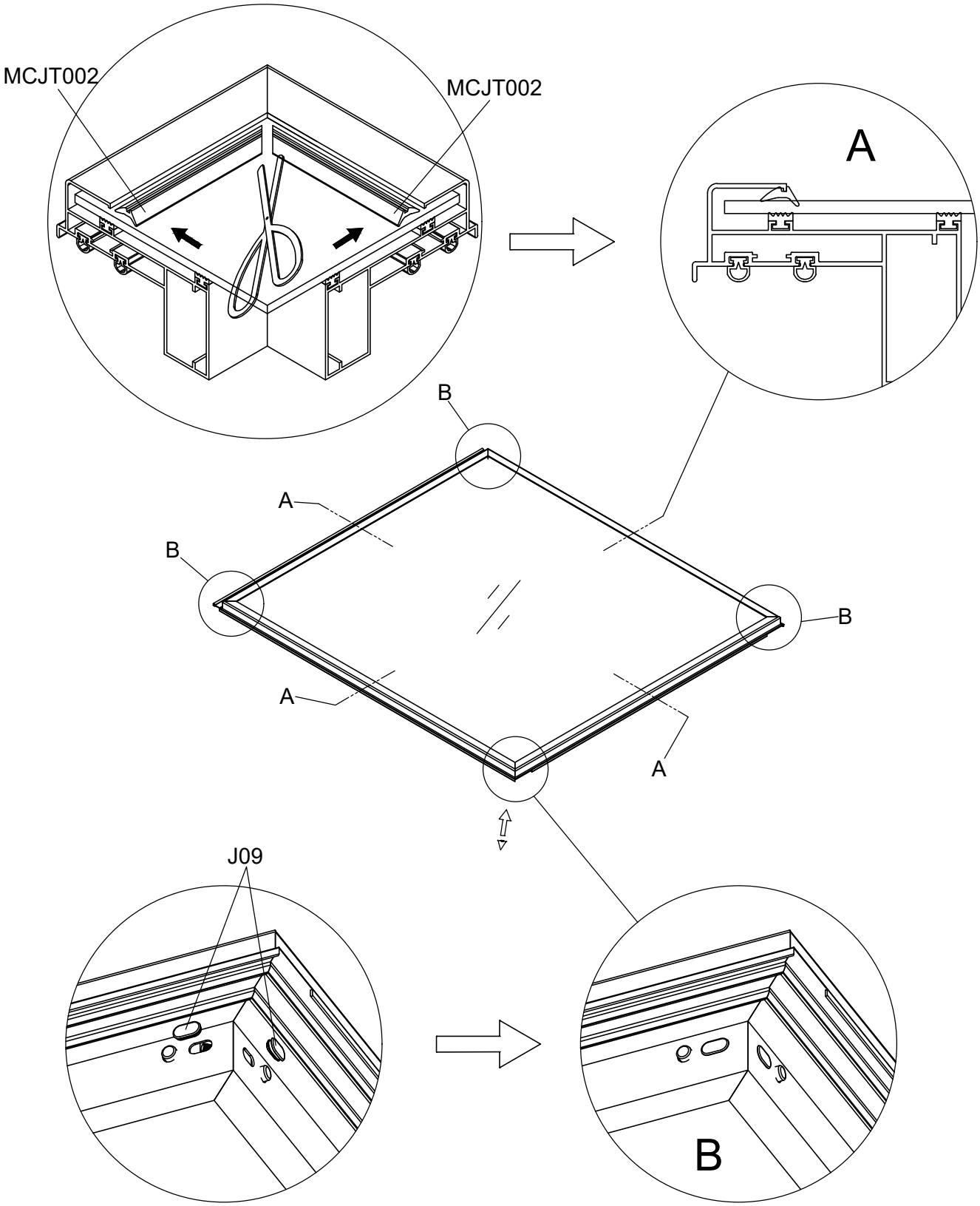

Part	NO.	QTY.			Length(MM)
		3002	3003	3004	
	T07	4	8	8	PCS

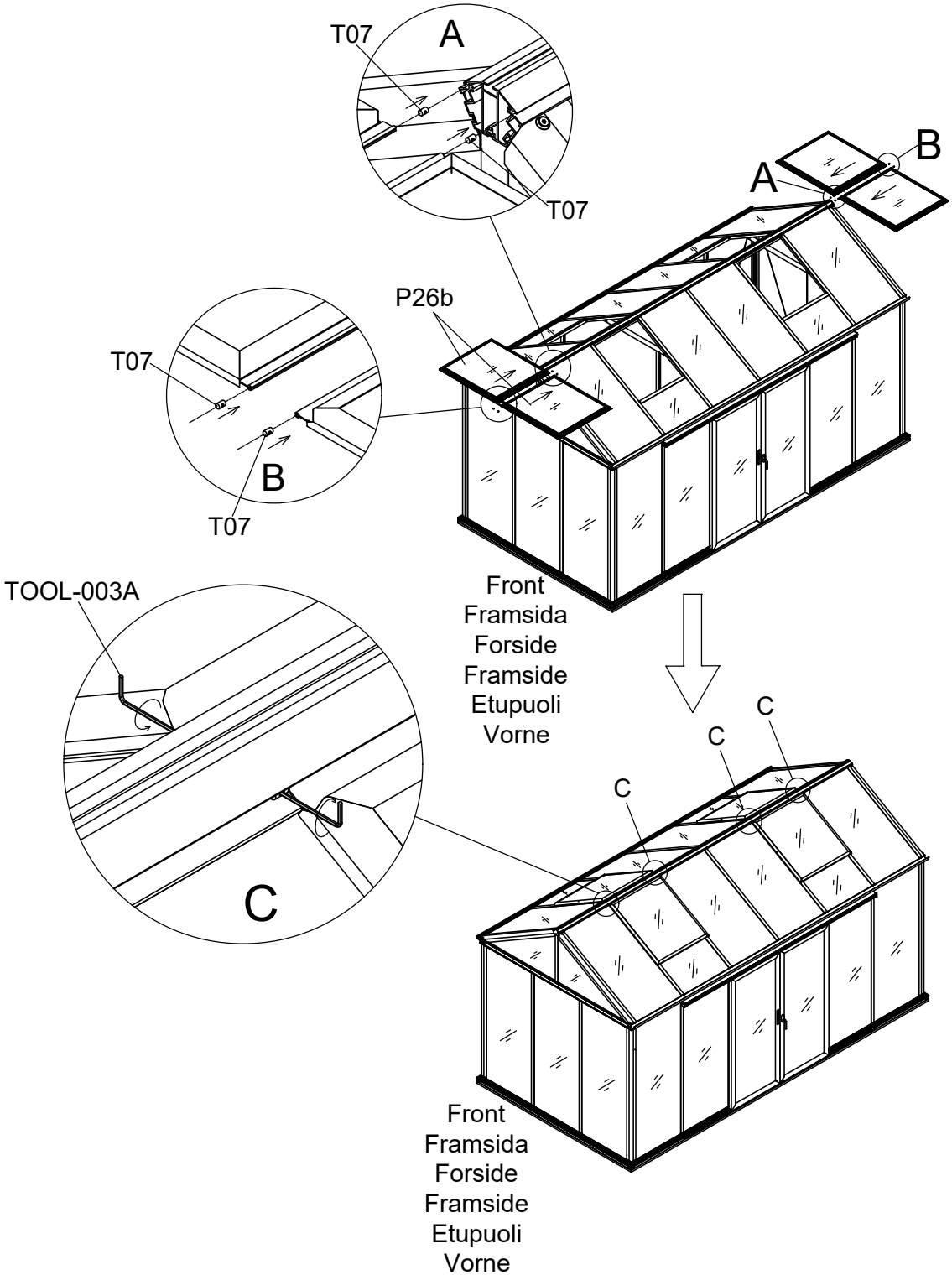

3002	3003	3004
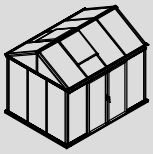	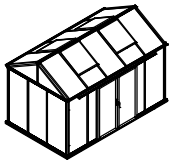	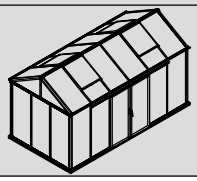

Part	NO.	QTY.	Length(MM)
	7C33-S02	2	PCS

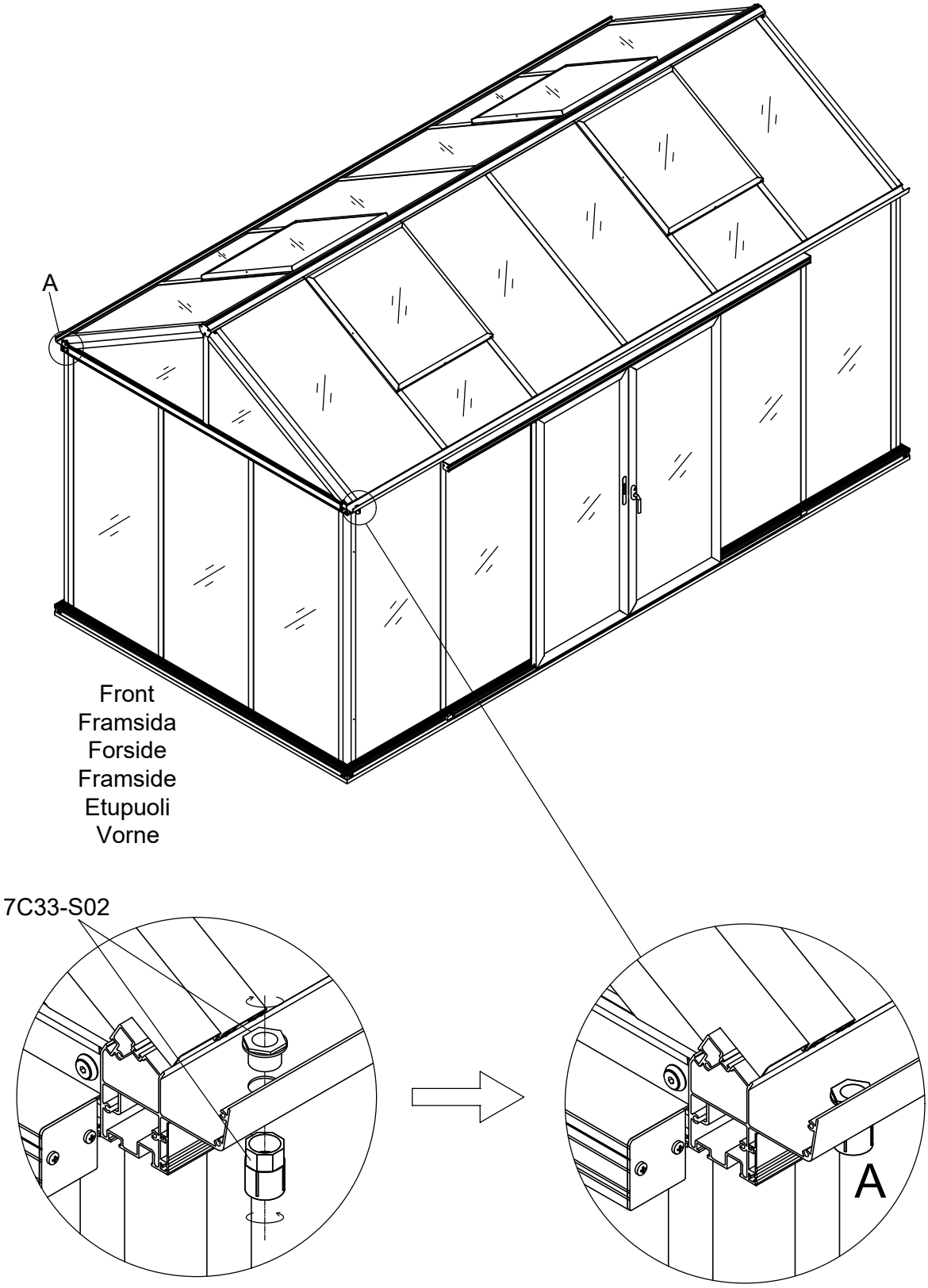

Part	NO.	QTY.	Length(MM)
	7C26-S01	2	1864
	7C33-S03	4	PCS
	Z4.8-25	4	PCS

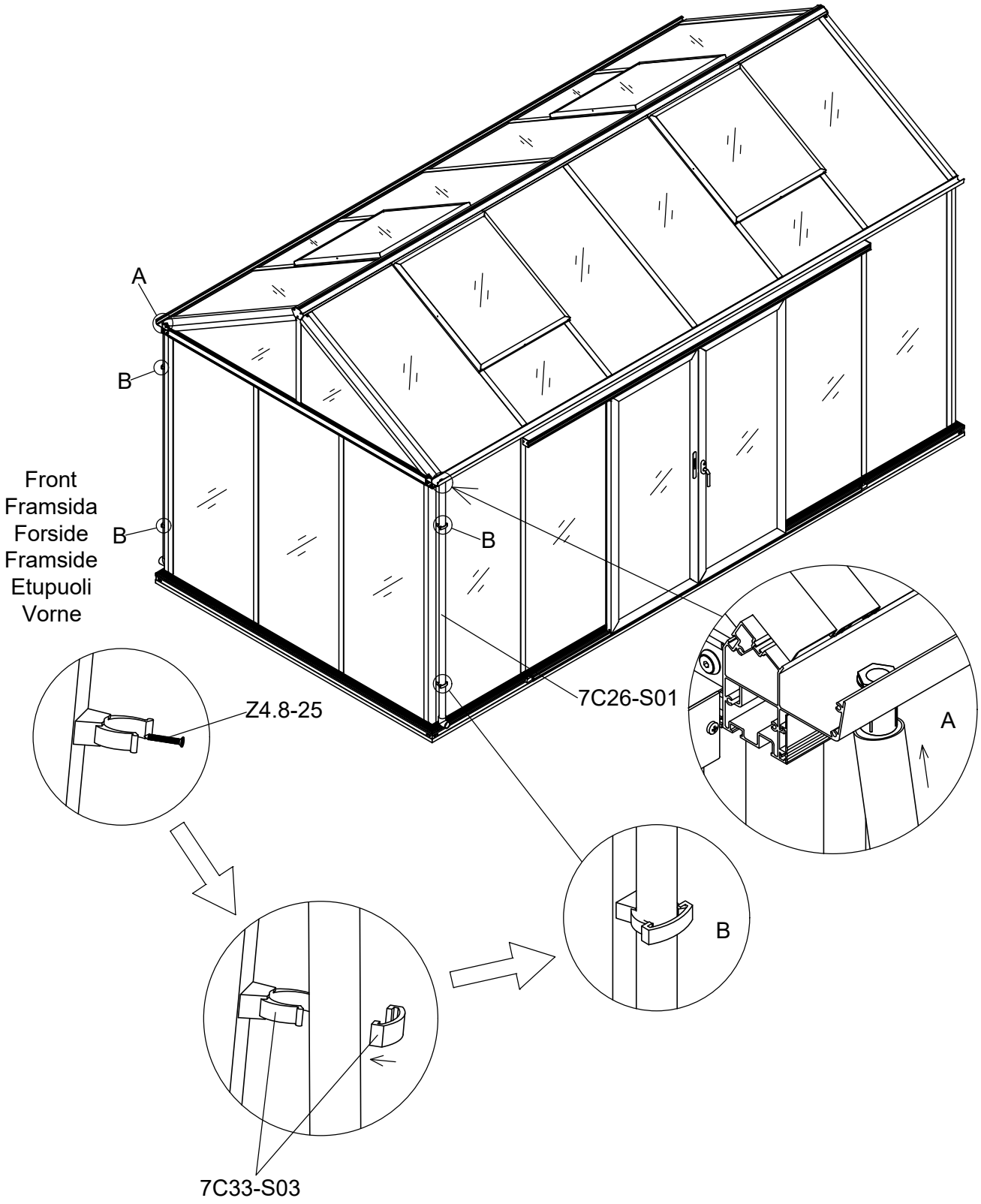

Part	NO.	QTY.	Length(MM)
	T09	2	PCS
	T10	4	PCS
	T10A	4	PCS
	Z4.2-13	26	PCS

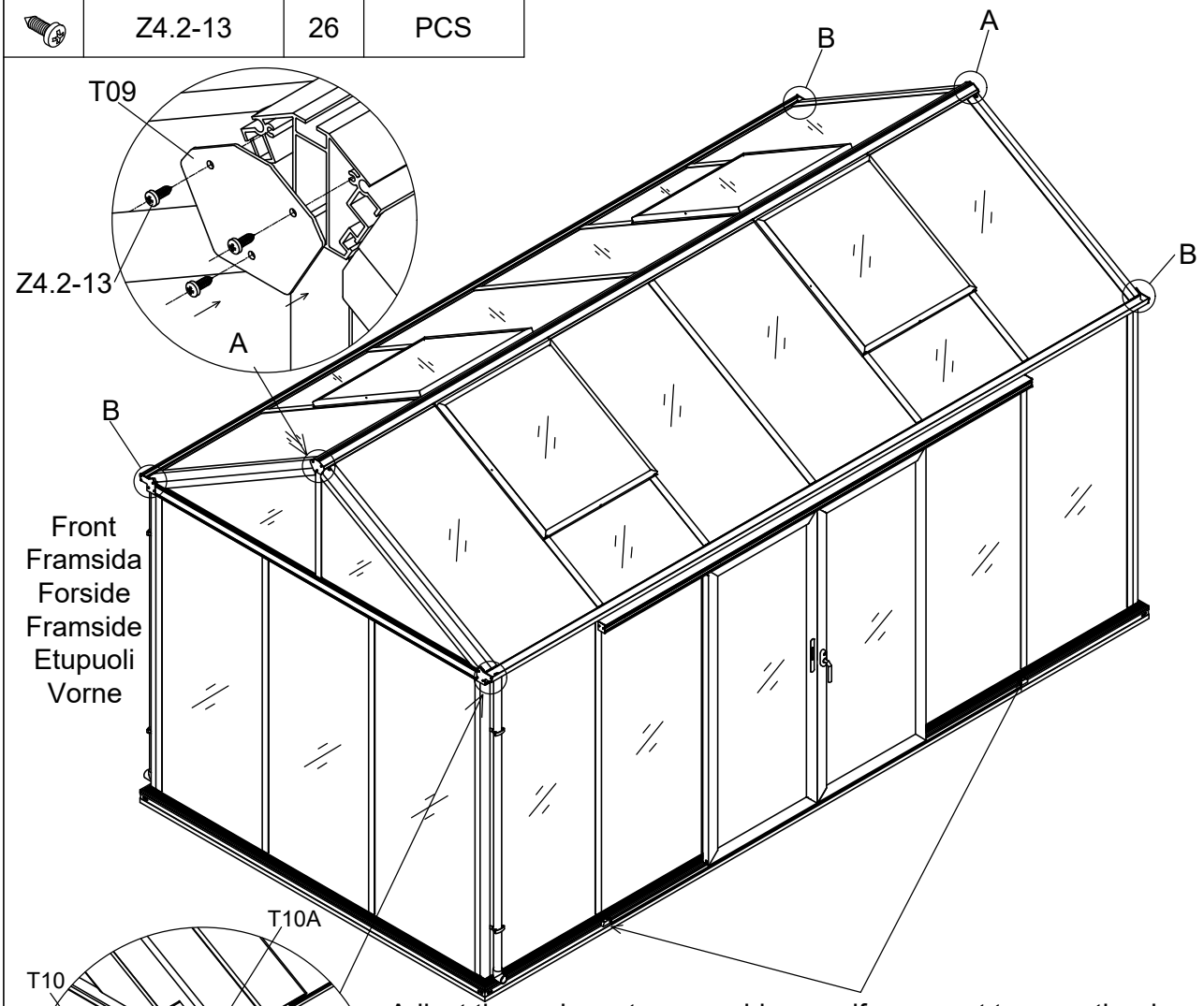

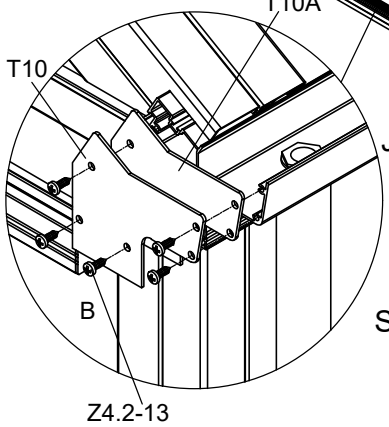

Adjust these door stoppers sideways if you want to open the door larger.
Justera avstånden av dörrstoppen i sidled om ni vill kunna öppna dörrarna ännu mer.
Justere dørstoppene sidelæns, for at give større åbning af døren.
Juster avstanden av dørstopperen sideveis om du vil kunne åpne døren ennå mer.
Säädä liukuovien stoppareiden etäisyys sivusuunnassa, mikäli haluat ovien avautuvan enemmän.
Stellen Sie den Türstopper seitlich ein, wenn Sie die Tür größer öffnen möchten.

3002	3003	3004
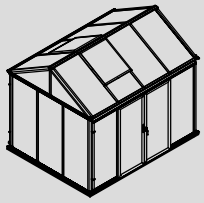	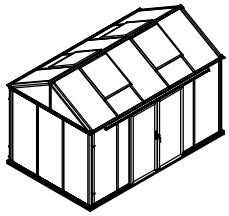	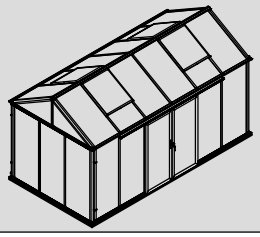

Part	Product	NO.	Length(MM)	Code
	3002	40X-Y11-4	3188	A001
	3003	40X-Y11-5	3939	
	3004	40X-Y11-6	4690	

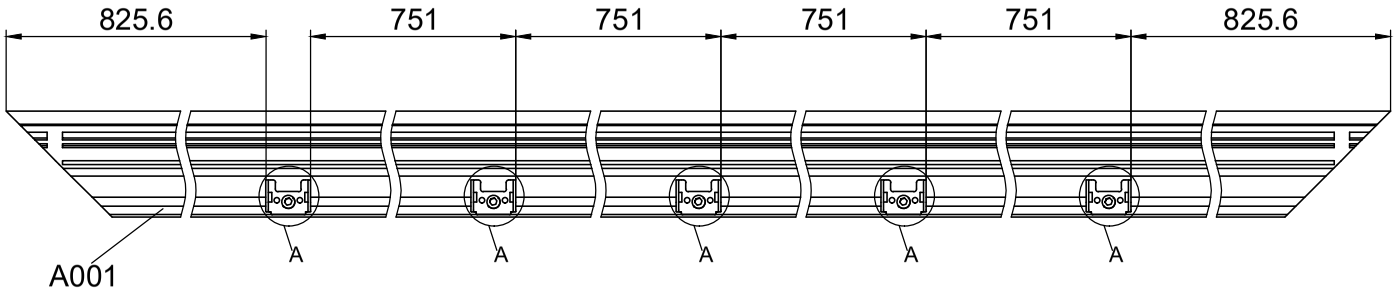

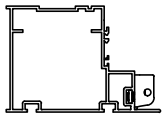

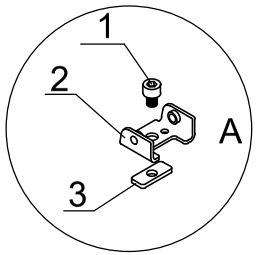

NO.	
1	M6-8
2	7B26-011
3	7B26-025

F1

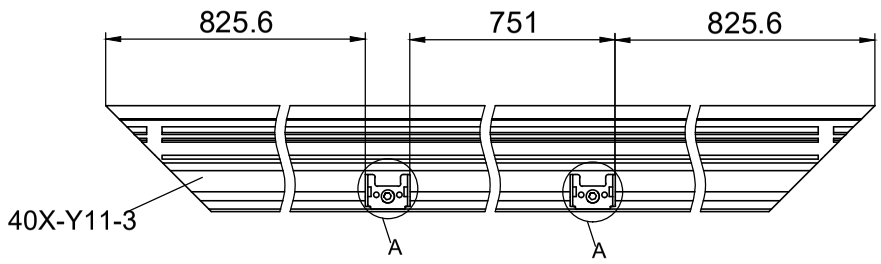

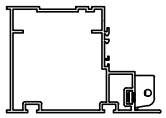

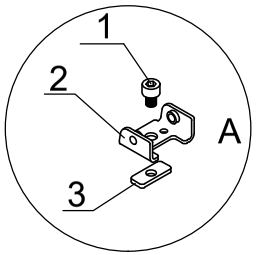

NO.	
1	M6-8
2	7B26-011
3	7B26-025

F2

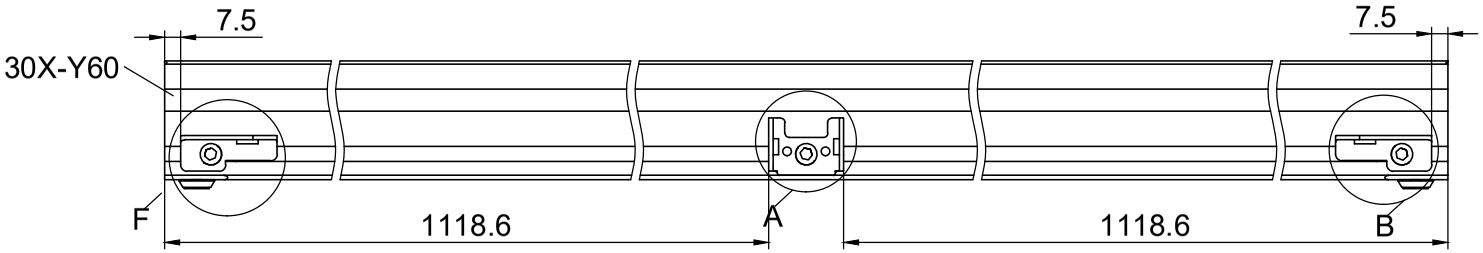

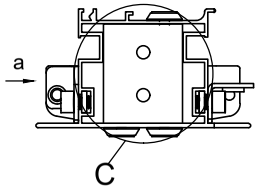

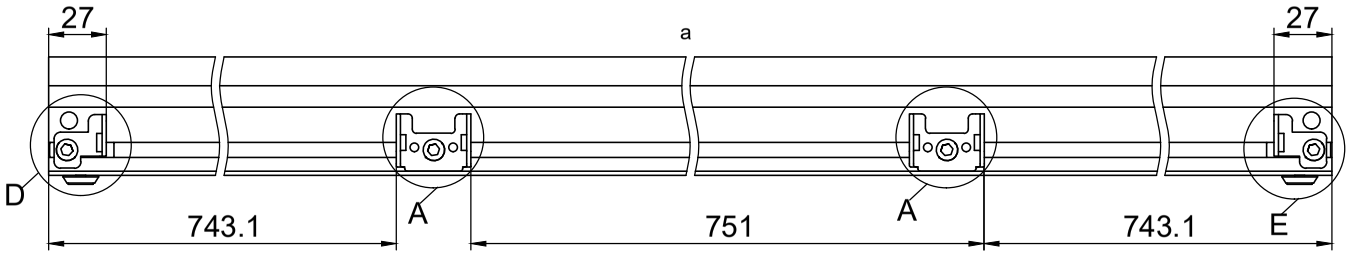

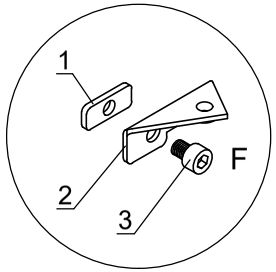

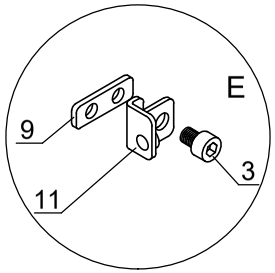

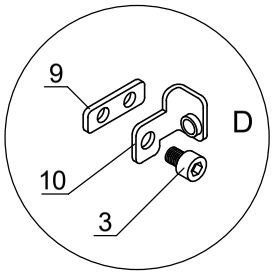

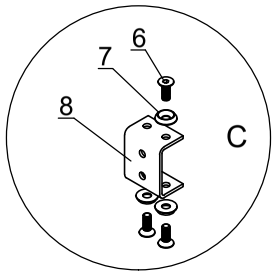

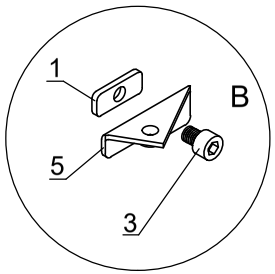

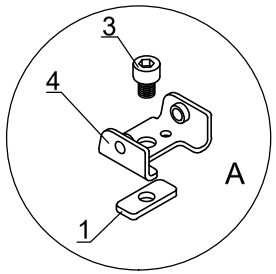

NO.	
1	7B26-025
2	7B26-030
3	M6-8
4	7B26-011
5	7B26-031
6	Si6-16
7	J05
8	7B26-028
9	7B26-033
10	7B26-027
11	7B26-026

F3

Part	Product	NO.	Length(MM)	Code
	3002	40X-Y62-4NR	3132	A002
	3003	40X-Y62-5NR	3883	
	3004	40X-Y62-6NR	4634	

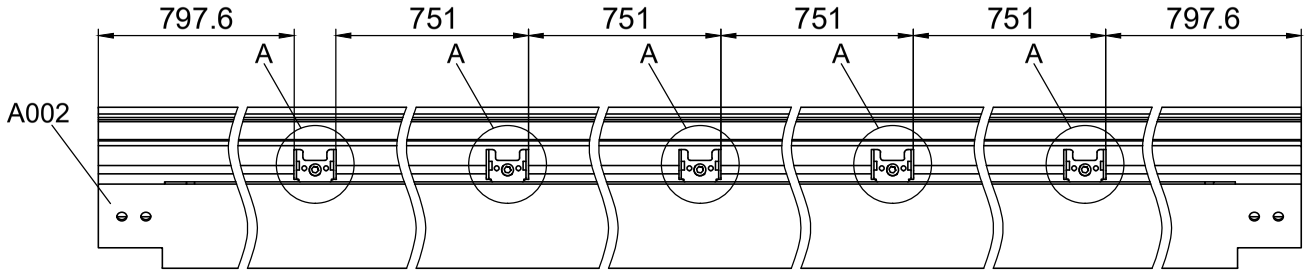

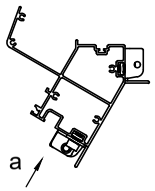

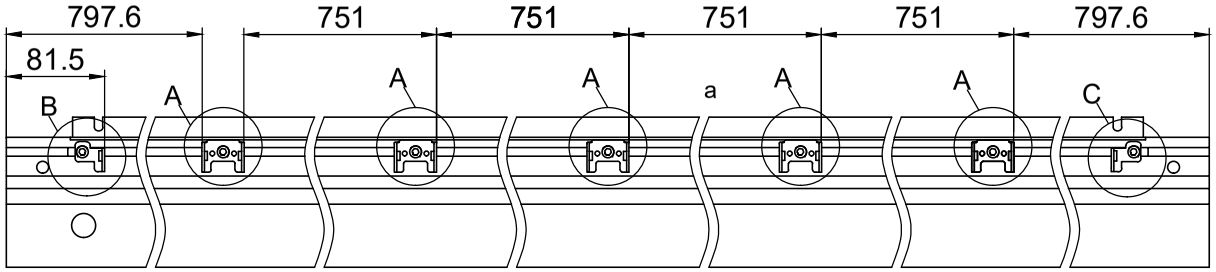

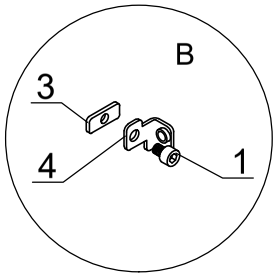

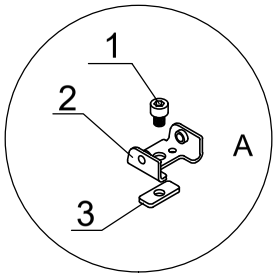

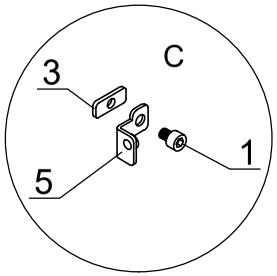

NO.	
1	M6-8
2	7B26-011
3	7B26-025
4	7B26-027
5	7B26-026

F4

Part	Product	NO.	Length(MM)	Code
	3002	40X-Y62-4NL	3132	A003
	3003	40X-Y62-5NL	3883	
	3004	40X-Y62-6NL	4634	

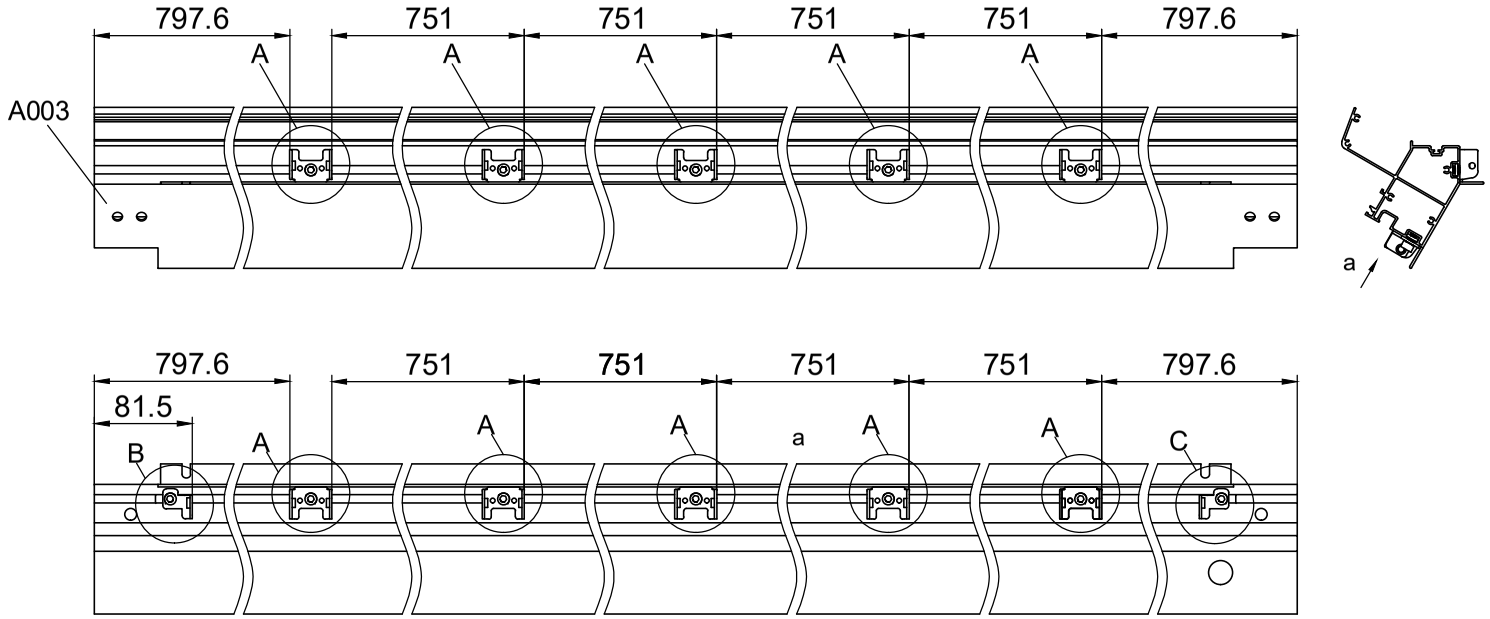

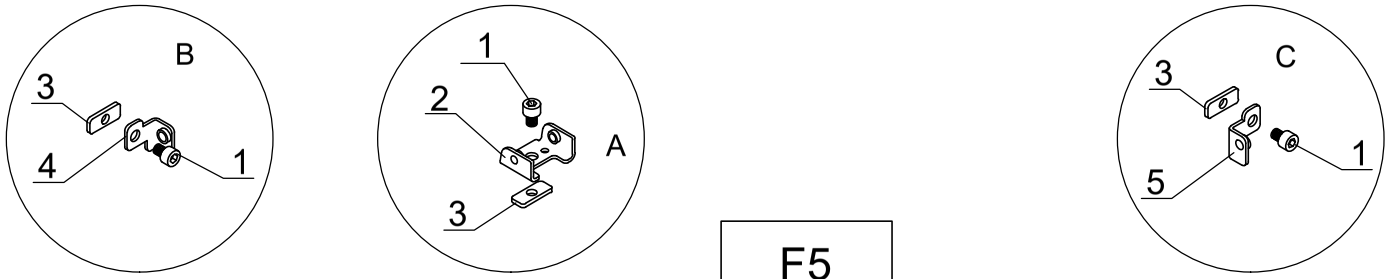

F5

NO.	
1	M6-8
2	7B26-011
3	7B26-025
4	7B26-027
5	7B26-026

Part	Product	NO.	Length(MM)	Code
	3002	40X-Y63-4	3118	A004
	3003	40X-Y63-5	3869	
	3004	40X-Y63-6	4620	

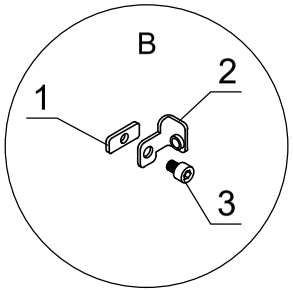

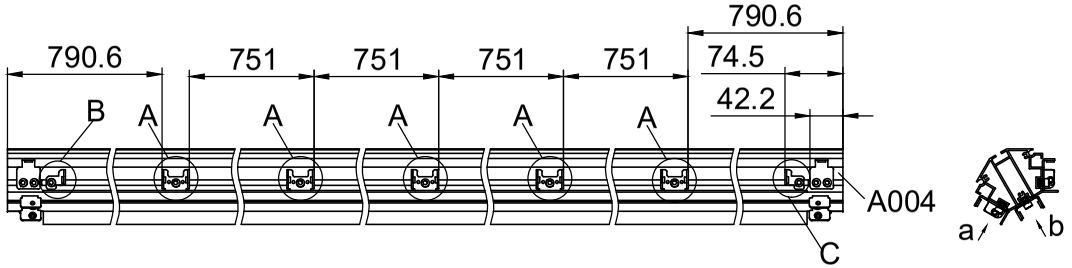

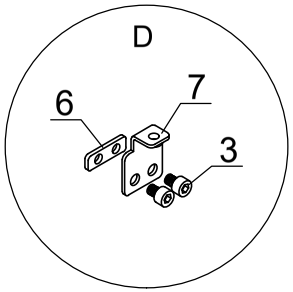

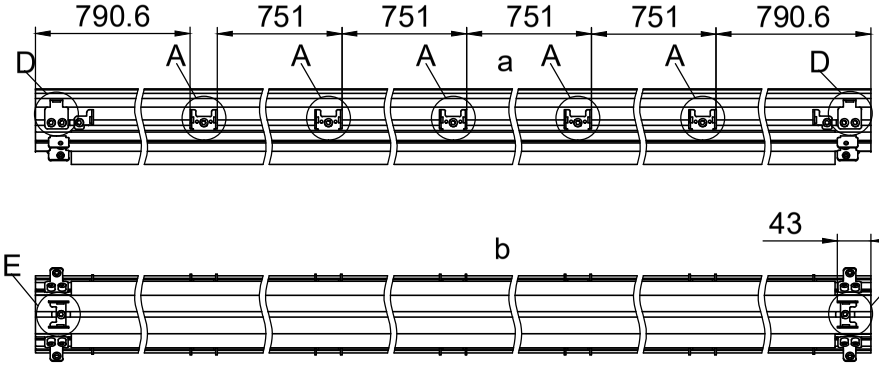

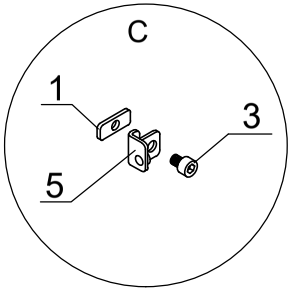

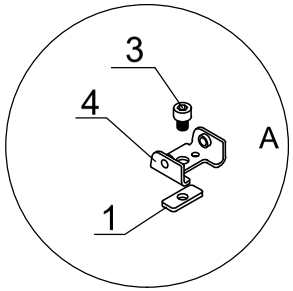

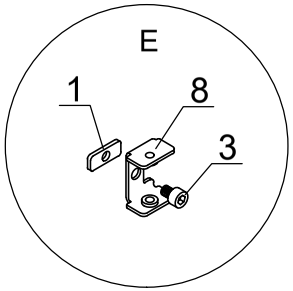

NO.	
1	7B26-025
2	7B26-026
3	M6-8
4	7B26-011
5	7B26-027
6	7B26-033
7	7B26-032
8	7B26-034

F6

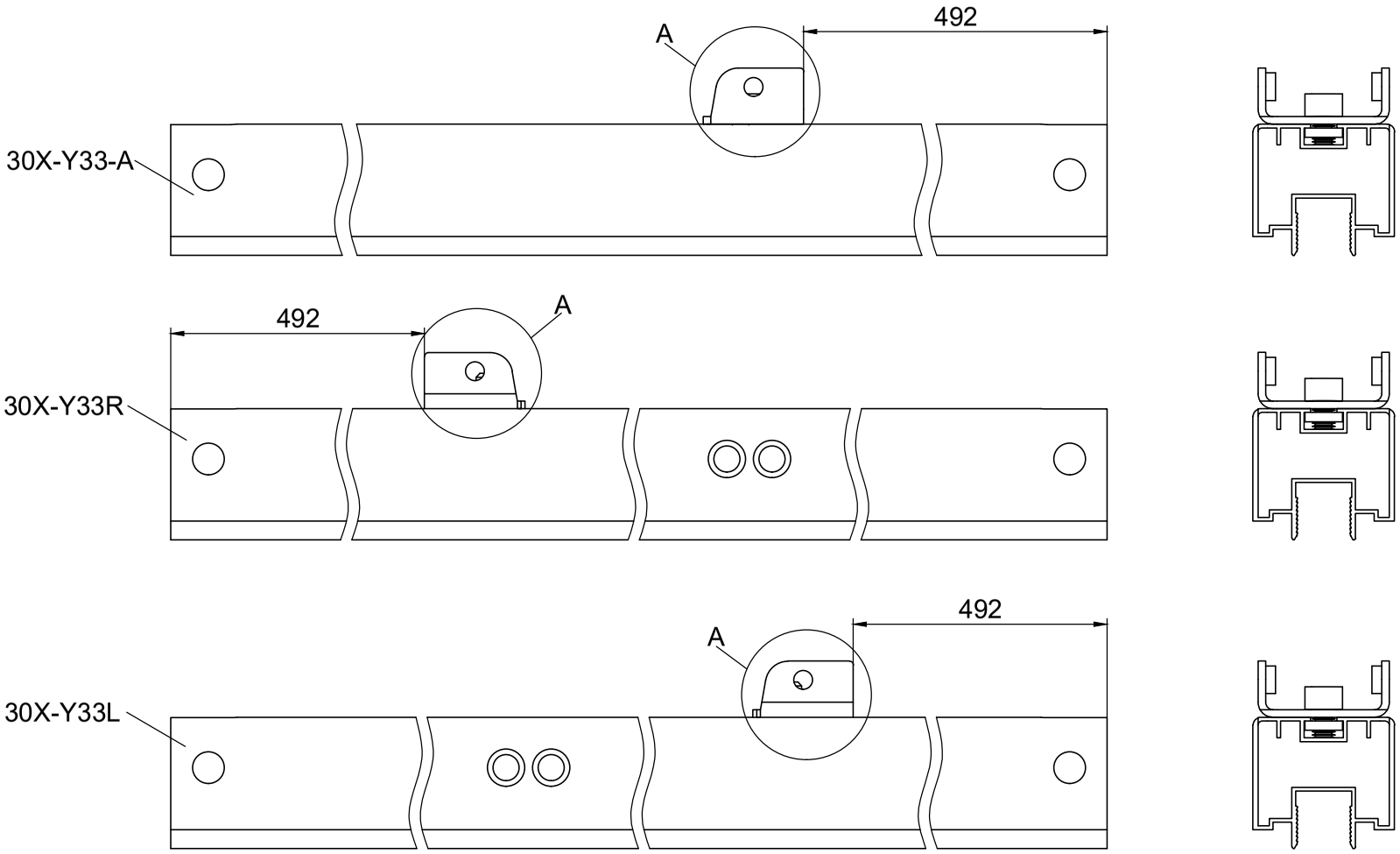

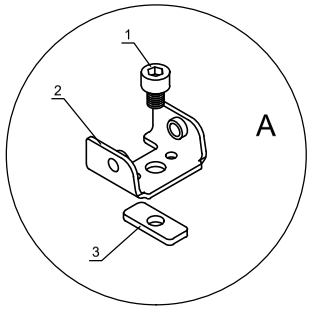

NO.	
1	M6-8
2	7B26-011
3	7B26-025

F7