Green Room®

BY WILLAB GARDEN

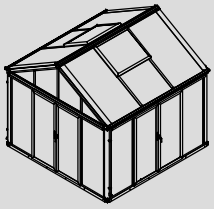	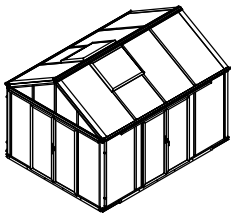	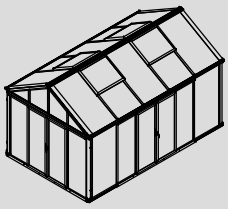	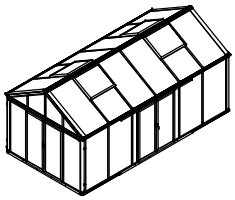
3601-XDG&XDS&XDS	3602-XDG&XDS&XDS	3603-XDG&XDS&XDS	3604-XDG&XDS&XDS
324×324×306 cm	424×324×306 cm	524×324×306 cm	624×324×306 cm

Product size (L×W×H):
Storlek (L×B×H):
Størrelse (L×B×H):
Størrelse (L×B×H):
Koko (P×L×K):
Produktgröße (L×B×H):

Please read carefully before assembling.
Two people are needed.

Läs noggrant innan montering.
Det krävs två personer för montering.

Læs venligst omhyggeligt, før montering.
Der kræves to personer til montering.

Les monteringsanvisningen nøye innen montering.
Det kreves to personer for montering.

Lue ohjeet huolellisesti läpi ennen asentamista.
Asentamiseen tarvitaan kaksi henkilöä.

Bitte vor dem Aufbau sorgfältig lesen.
Zwei Personen werden benötigt.

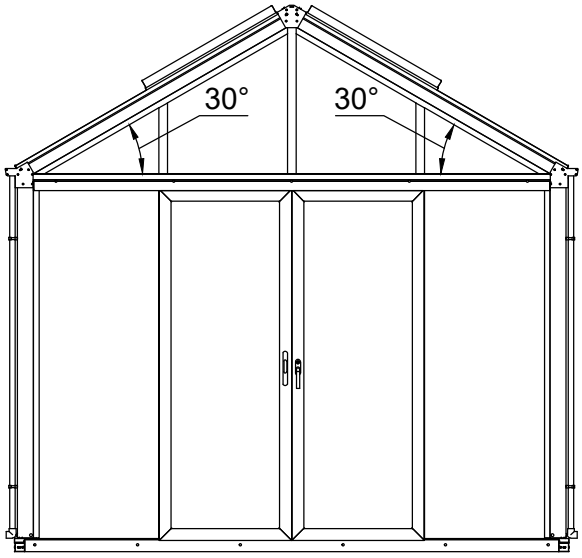

251020

Part	3601		3602		3603		3604		QTY.	Code	Page
	NO.	Length(MM)	NO.	Length(MM)	NO.	Length(MM)	NO.	Length(MM)			
	41X-Y11-3	3239	41X-Y11-4	4239	41X-Y11-5	5240	41X-Y11-6	6241	2	A001	P2
	41X-Y62-3	3228	41X-Y62-4	4228	41X-Y62-5	5229	41X-Y62-6	6230	2	A002	P4
	41X-Y63-3	3207	41X-Y63-4	4207	41X-Y63-5	5208	41X-Y63-6	6209	1	A003	P6
	41X-Y62-3BR	3228	41X-Y62-4BR	4228	41X-Y62-5BR	5229	41X-Y62-6BR	6230	1	A004	P9
	41X-Y62-3BL	3228	41X-Y62-4BL	4228	41X-Y62-5BL	5229	41X-Y62-6BL	6230	1	A005	P9
	41X-Y15-3	3239	41X-Y15-4	4239	41X-Y15-5	5240	41X-Y15-6	6241	2	A006	P12
	41X-Y63-3A	3207	41X-Y63-4A	4207	41X-Y63-5A	5208	41X-Y63-6A	6209	2	A007	P18

Part	NO.	QTY.				Length(MM)	Page
		3601	3602	3603	3604		
	41X-Y30	0	4	4	8	1919	P5
	41X-Y33R	2	2	4	4	1715	P8
	41X-Y33L	2	2	4	4	1715	P8
	41X-Y34	2	2	4	4	951	P8
	41X-Y33	0	2	0	2	1715	P8
	41X-Y35	2	3	4	5	1500	P10
	41X-Y01	0	4	4	8	1919	P12
	41X-Y101	6	8	10	12	980	P17

Part	NO.	QTY.				Length(MM)	Page
		3601	3602	3603	3604		
	41X-Y06	4	6	8	10	1782	P17
	41X-Y07	2	2	4	4	950	P17
	41X-Y80	2	2	4	4	1087	P25
	41X-Y82	2	2	4	4	1087	P25
	41X-Y81	4	4	8	8	887	P25
	41X-Y84	4	4	8	8	1076	P25
	41X-Y83	4	4	8	8	877	P25

Part	NO.	QTY.	Length(MM)	Page
	41X-Y12	1	3239	P2
	41X-Y13	1	3239	P2
	41X-Y20	4	1920	P3
	41X-Y61	1	3023	P4
	41X-Y60	1	3023	P4
	41X-Y30-DR	1	1919	P5
	41X-Y30-DL	1	1919	P5
	41X-Y32	2	857	P6
	41X-Y21	2	1715	P7
	41X-Y22	2	1715	P7
	41X-Y31R	2	412	P7
	41X-Y31L	2	412	P7
	41X-Y15-3	2	3239	P12
	41X-Y02	10	1919	P12
	41X-Y03	2	857	P14~15
	41X-Y04R	2	412	P14~15
	41X-Y04L	2	412	P14~15
	41X-Y05R	2	1712	P14~15
	41X-Y05L	2	1712	P14~15
	41X-Y06B	4	1782	P17
	41X-Y90	2	1922	P19
	41X-Y91R	1	1922	P19
	41X-Y92R	1	776	P19
	41X-Y93	2	776	P19
	41X-Y91L	1	1922	P19
	41X-Y92L	1	776	P19
	41X-Y97-R	1	1915	P21
	41X-Y97-B	2	1882	P21
	41X-Y97-A	2	1882	P21
	41X-Y97-L	1	1915	P21

Part	NO.	QTY.	Length(MM)	Page
	41X-Y94	1	1910	P21
	41X-Y64	1	3016	P22
	41X-Y17	1	3120	P22
	41X-Y100	1	1451	P23
	41X-Y61-A	1	3023	P27

Part	NO.	QTY.				Length(MM)	Page
		3601	3602	3603	3604		
	M8-20	60	60	68	68	PCS	P3~8
	Si8-16	104	124	144	164	PCS	P3~10
	7B33-020	104	124	144	164	PCS	P3~10
	7C33-001	16	16	24	24	PCS	P3~8
	7C28-004	27	31	35	39	PCS	P9~22
	Z4.2-13	32	36	40	44	PCS	P9~30
	J12	90	102	120	132	PCS	P11~25
	7B33-019	4	6	8	10	PCS	P17
	Z4.2-50	13	15	17	19	PCS	P18~22
	W04	24	24	32	32	PCS	P19~25
	W02	8	8	16	16	22	P24
	T07	4	4	8	8	PCS	P26
	7C26-009A	27M	31M	35M	39M		P13~16
	7C26-022	8.5M	8.5M	17M	17M		P25

Part	NO.	QTY.	Length(MM)	Page
	S6-12	20	PCS	P2
	7B33-001	4	PCS	P2
	W06	4	46	P2
	M6	20	PCS	P2
	7B33-002	4	PCS	P3
	7B33-003	4	PCS	P3
	7B33-008	4	PCS	P4
	7B33-017	2	PCS	P17
	7B33-018	2	PCS	P17
	W03	8	30	P19
	T04	2	PCS	P21
	Z4.2-38	4	PCS	P21
	Z3.5-25	8	PCS	P21~24
	T01N	1	PCS	P24
	T01A	1	PCS	P24
	J02	2	PCS	P24
	7B33-021A	2	PCS	P24
	7B33-022R	1	PCS	P24
	7B33-022L	1	PCS	P24
	M4-40	2	PCS	P24
	Mi4-17	2	PCS	P24
	Za4.2-13	44	PCS	P24~30
	7C33-S02	2	PCS	P28
	7C33-S03	4	PCS	P29
	Z4.8-25	4	PCS	P29
	7B33-015L	2	PCS	P30
	7B33-015R	2	PCS	P30
	7C33-004	4	PCS	P30
	7B33-016	2	PCS	P30

Part	NO.	QTY.	Length(MM)	Page
	7C33-005	2	PCS	P30
	7B33-014	6	550	P2
	NSST120	2.0M		P21
	7C33-S01	2	1980	P29
	MCJT002	12M		P20
	TOOL-001	1	274	P2~30
	TOOL-002	1	80	P2~30
	TOOL-003A	1	2MM	P26
	TOOL-004A	1	3MM	
	TOOL-005	1	4MM	
	TOOL-006	1	5MM	P2~23
	TOOL-007	1	6MM	P3~23

3010P-TD

Part	NO.	QTY.	Length(MM)	Page
	41X-Y30-DR	1	1919	P5
	41X-Y30-DL	1	1919	P5
	41X-Y02	2	1919	P12
	41X-Y90	2	1922	P19
	41X-Y91R	1	1922	P19
	41X-Y92R	1	776	P19
	41X-Y93	2	776	P19
	41X-Y91L	1	1922	P19
	41X-Y92L	1	776	P19
	41X-Y97-R	1	1915	P21
	41X-Y97-B	2	1882	P21
	41X-Y97-A	2	1882	P21
	41X-Y97-L	1	1915	P21
	41X-Y94	1	1910	P21
	41X-Y64	1	3016	P22
	41X-Y17	1	3120	P22
	41X-Y100	1	1451	P23
	MCJT002	12M		P20
	NSST120	2.0M		P21

Part	NO.	QTY.	Length(MM)	Page
	7B33-005	4	PCS	P4
	M8-10	8	PCS	P4
	Si8-16	8	PCS	P5
	7B33-020	8	PCS	P5
	W03	8	30	P19
	W04	16	PCS	P19
	J12	6	PCS	P19
	Z4.2-13	16	PCS	P21~22
	T04	2	PCS	P21
	Z4.2-38	4	PCS	P21
	Z3.5-25	8	PCS	P21
	7C28-004	11	PCS	P22
	Z4.2-50	5	PCS	P22
	T01N	1	PCS	P24
	T01A	1	PCS	P24
	J02	2	PCS	P24
	7B33-021A	2	PCS	P24
	7B33-022R	1	PCS	P24
	7B33-022L	1	PCS	P24
	M4-40	2	PCS	P24
	Mi4-17	2	PCS	P24
	Za4.2-13	8	PCS	P24

3680P-D-4F	Part	NO.	QTY.	Length(MM)	Page	Code
		41X-Y62-4C	2	603	P27	A009

3680P-D-5F	Part	NO.	QTY.	Length(MM)	Page	Code
		41X-Y62-5C	2	1103	P27	A009

3680P-D-6F	Part	NO.	QTY.	Length(MM)	Page	Code
		41X-Y62-6C	2	1604	P27	A009

3680P-D-4G	Part	NO.	QTY.	Length(MM)	Page
		41X-Y61-A	1	3023	P27

CTN NO.	QTY.			
	3601	3602	3603	3604
3010P-TD	3	3	3	3
3680P-D-4F	0	2	0	0
3680P-D-5F	0	0	2	0
3680P-D-6F	0	0	0	2
3680P-D-4G	1	1	1	1

Part	NO.	QTY.				Length(MM)	Page
		3601	3602	3603	3604		
	730×1953	8	4	8	4	1953	P11
	980×1953	0	4	4	8	1953	P11
	228×1953	0	4	0	4	1953	P11
	694×423	4	4	4	4	694	P14~15
	730×856	4	4	4	4	856	P14~15
	980×1800	4	6	6	8	1800	P17
	980×909	2	2	4	4	980	P17
	664×1808	8	8	8	8	1808	P19
	1032×831	2	2	4	4	1032	P25

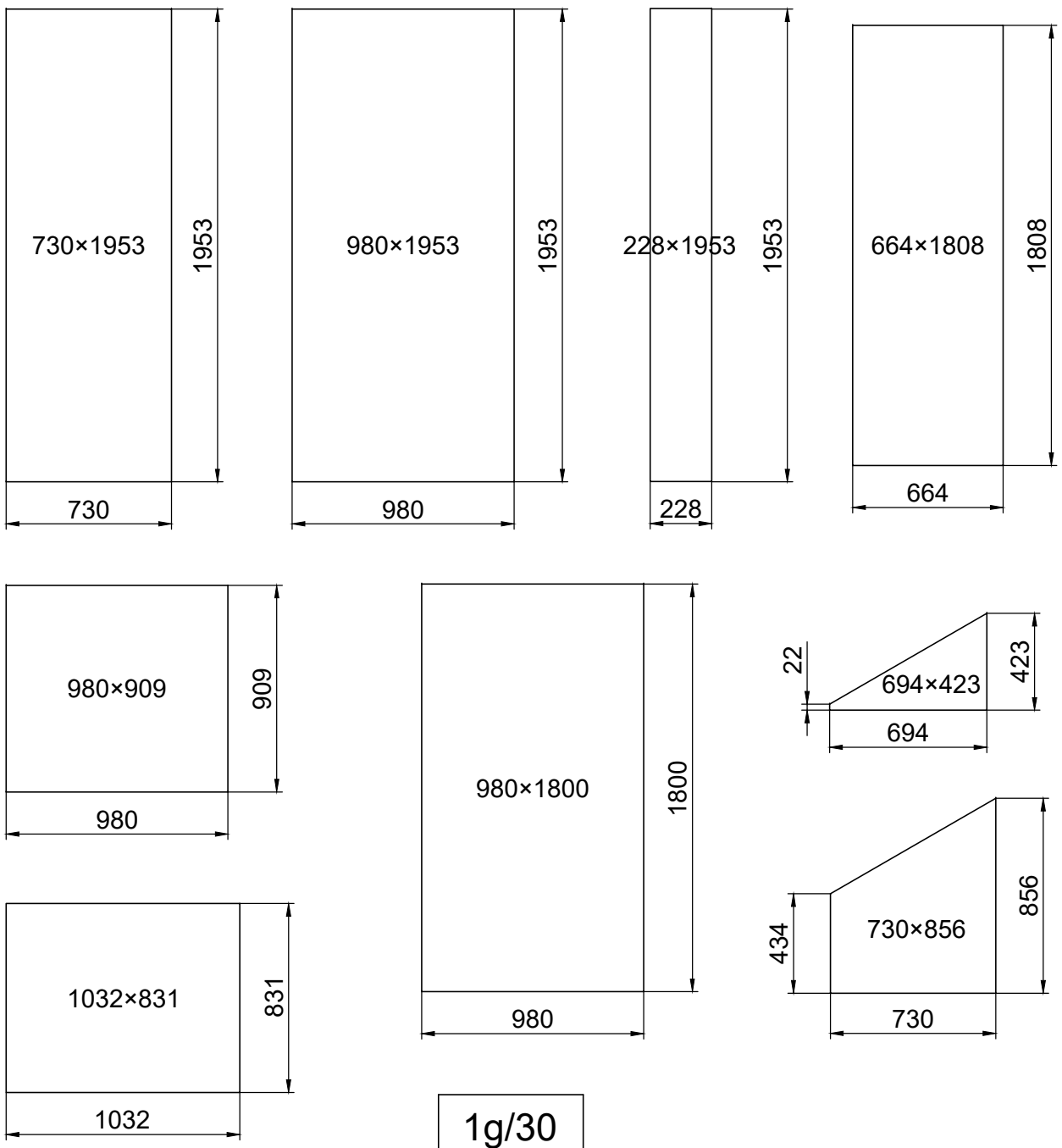

NO.	L1	L2	AREA
3601	3239	3020	10.5 M^2
3602	4239	4020	13.7 M^2
3603	5240	5021	17.0 M^2
3604	6241	6022	20.2 M^2

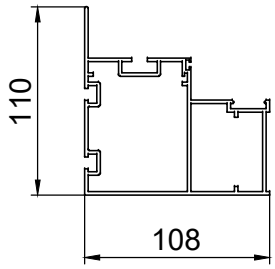

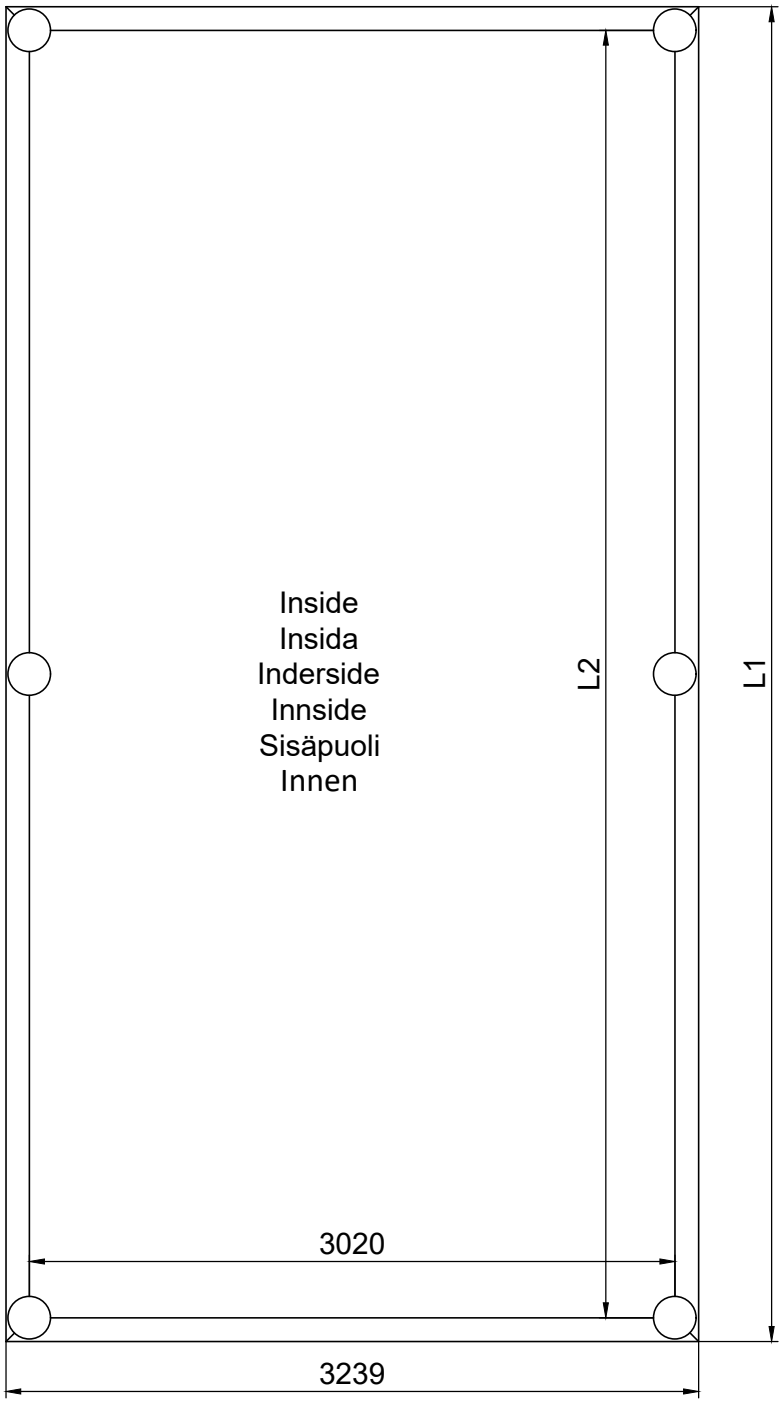

Part	NO.	QTY.	Length(MM)
	41X-Y12	1	3239
	41X-Y13	1	3239
	S6-12	20	PCS

Part	Product	NO.	Length(MM)	QTY.	Code
	3601	41X-Y11-3	3239	2	A001
	3602	41X-Y11-4	4239		
	3603	41X-Y11-5	5240		
	3604	41X-Y11-6	6241		

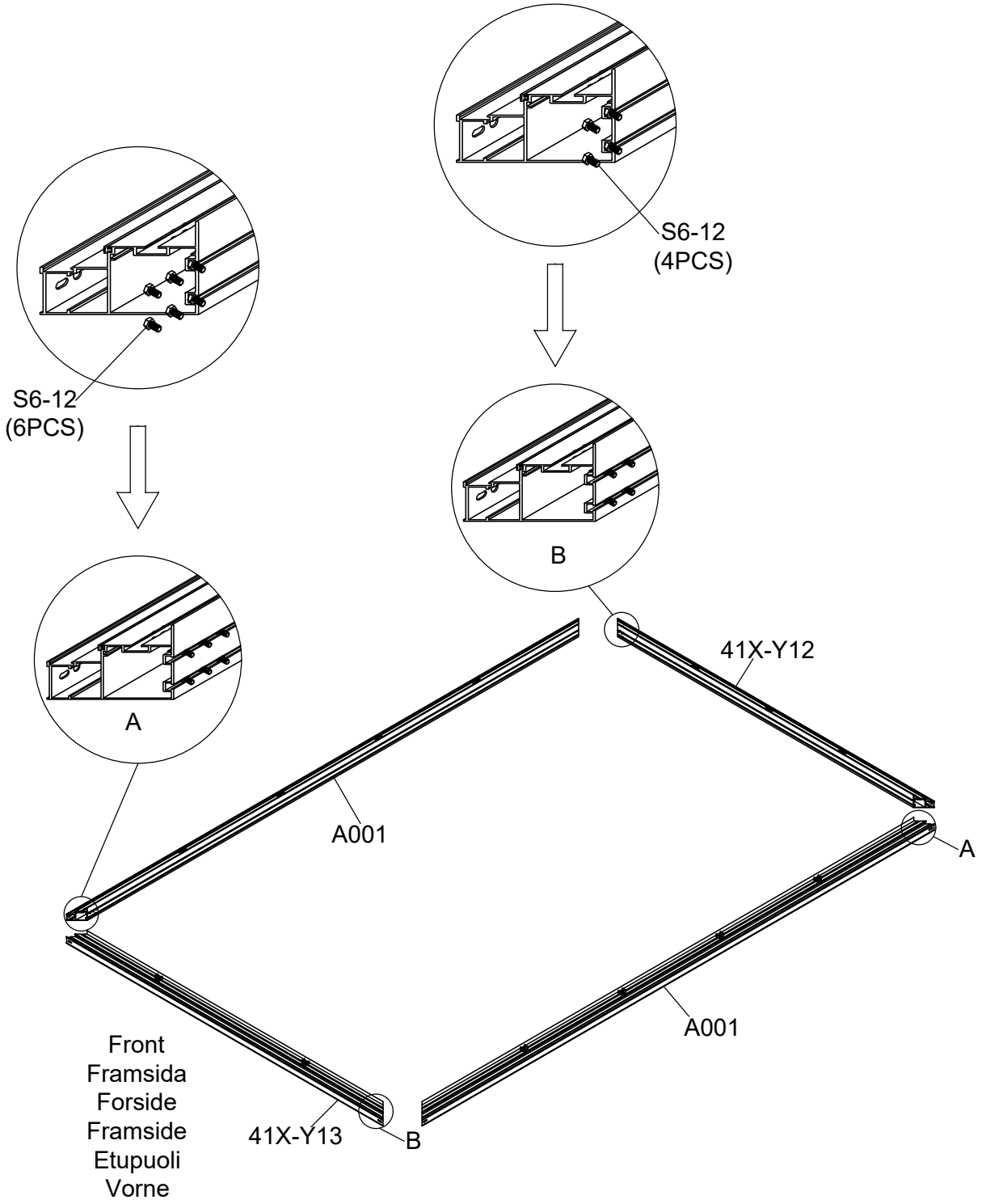

Part	NO.	QTY.	Length(MM)
	7B33-001	4	PCS
	W06	4	46

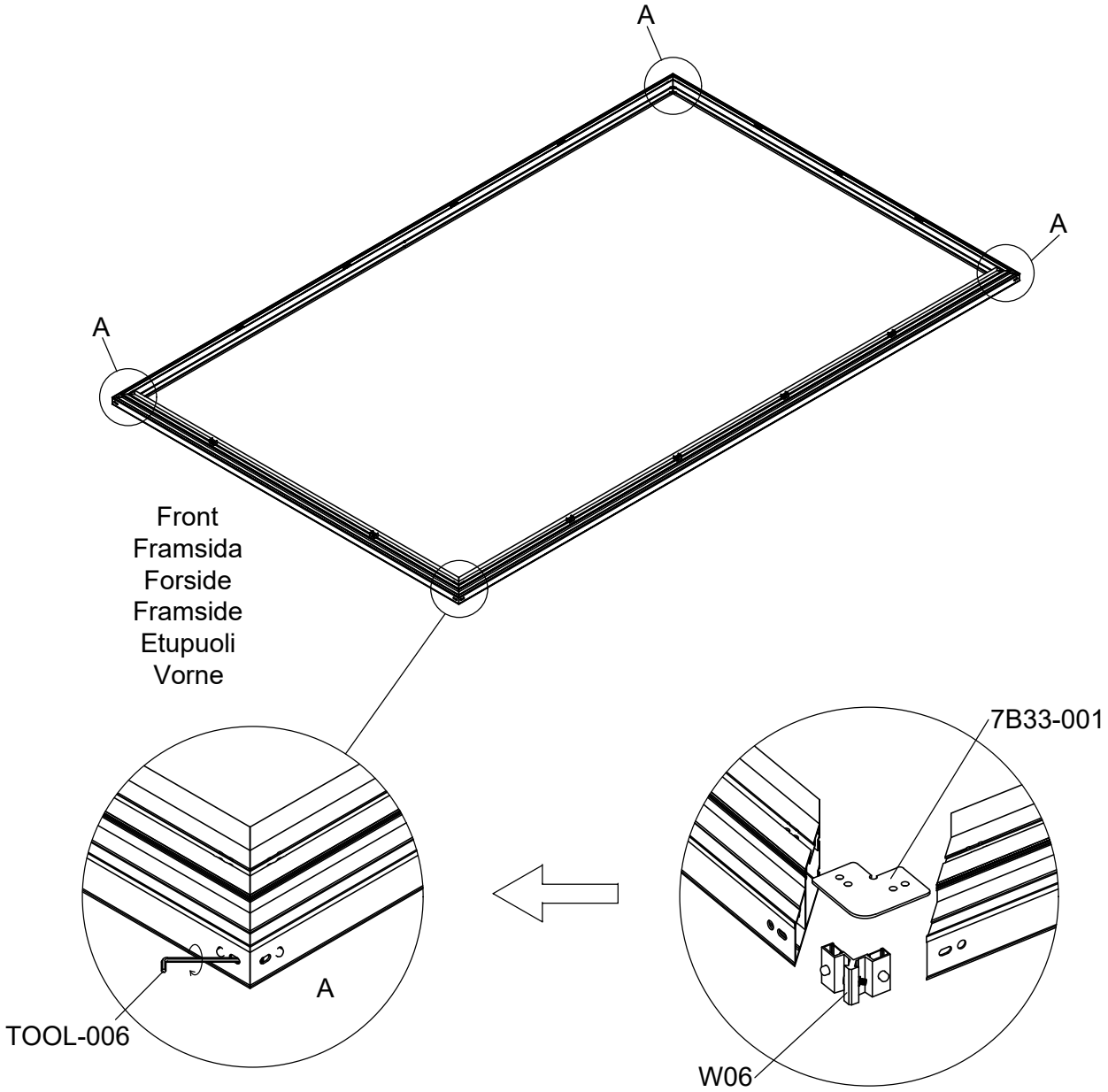

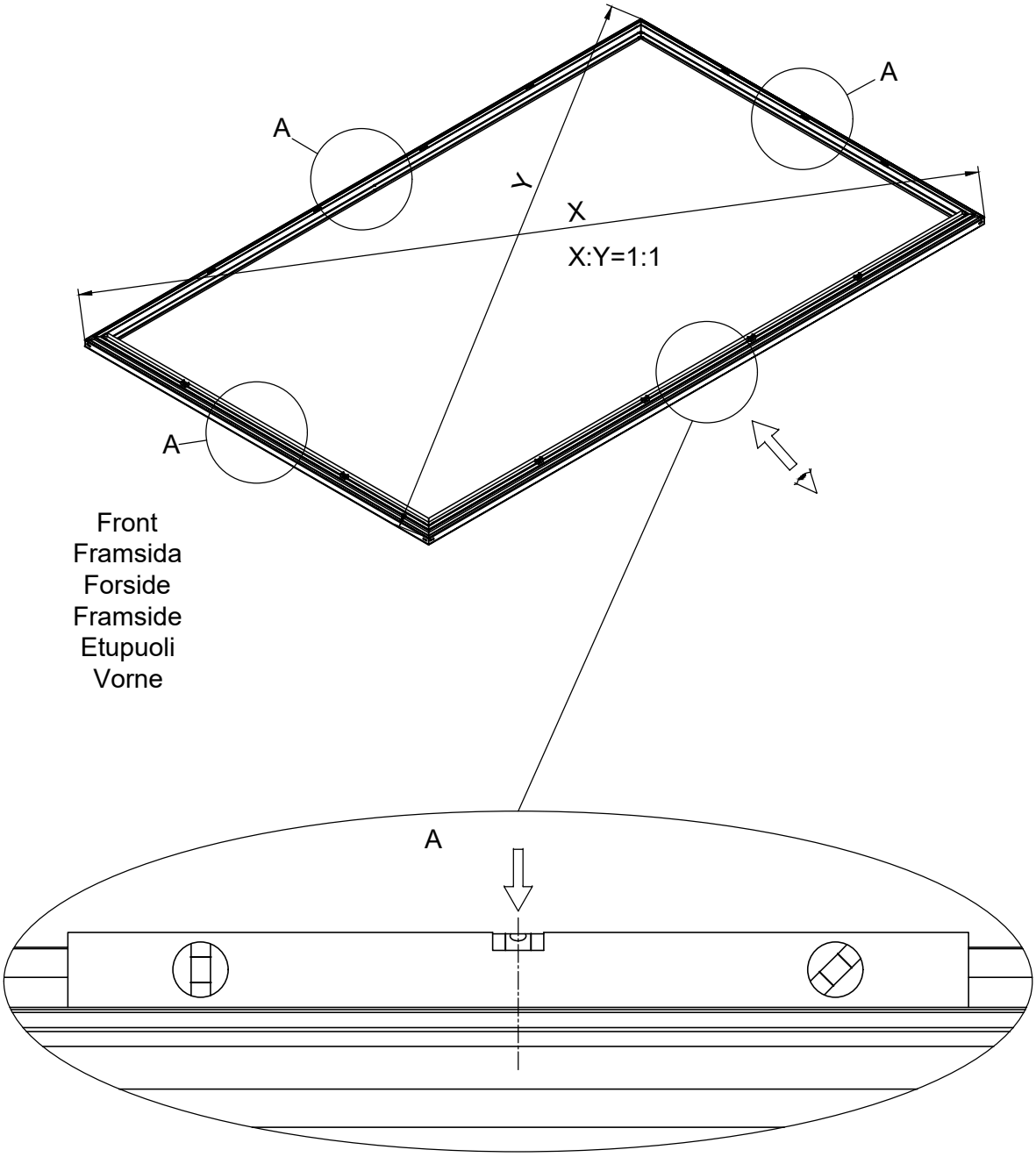
A
A
A
Y
X
X:Y=1:1
Front
Framsida
Forside
Framside
Etupuoli
Vorne
A

Part	NO.	QTY.	Length(MM)
	7B33-014	6	550
	M6	20	PCS

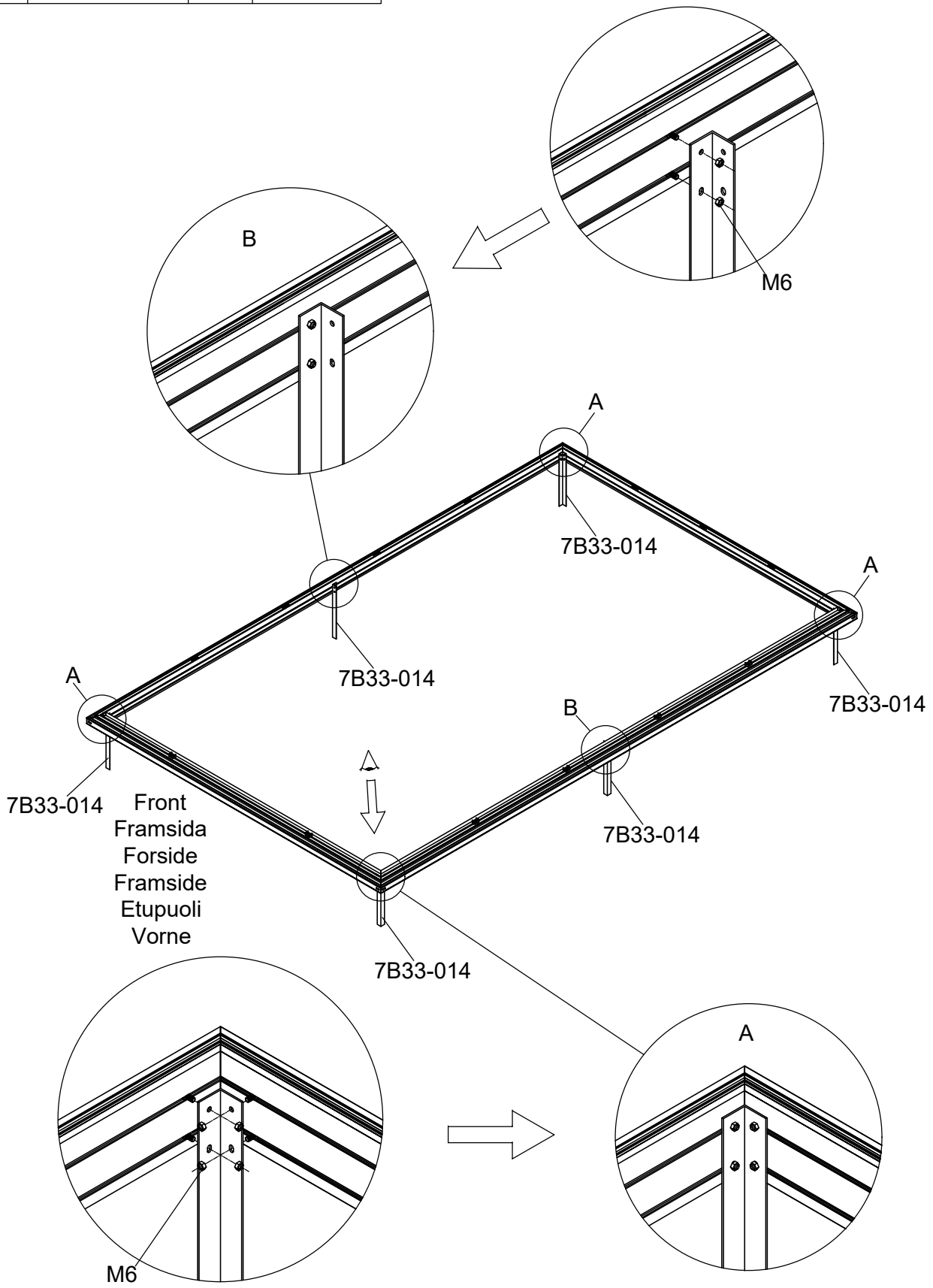

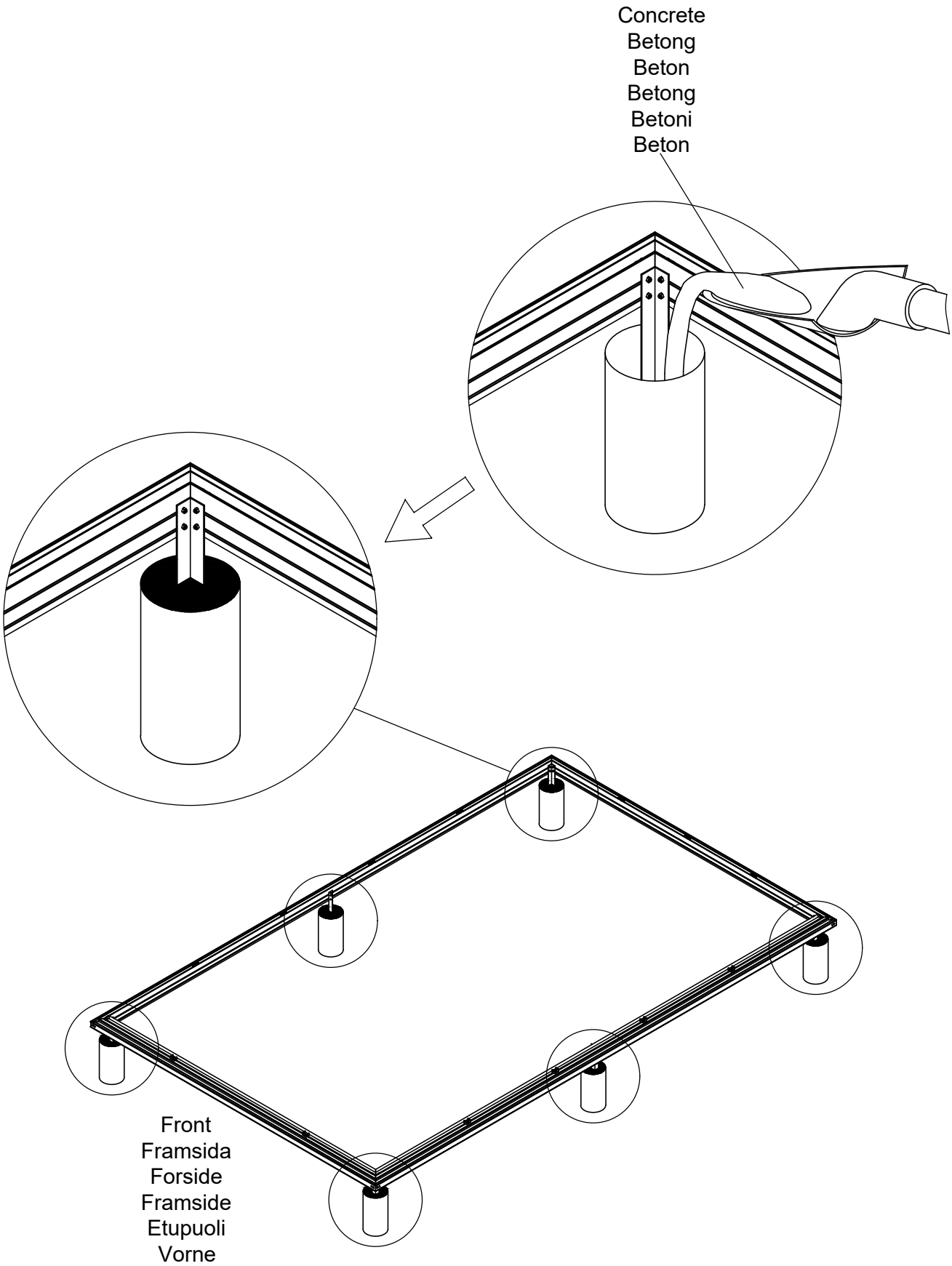
Concrete
Betong
Beton
Betong
Betoni
Beton
Front
Framsida
Forside
Framside
Etupuoli
Vorne

Part	NO.	QTY.	Length(MM)
	7B33-002	4	PCS
	7B33-003	4	PCS
	M8-20	16	PCS

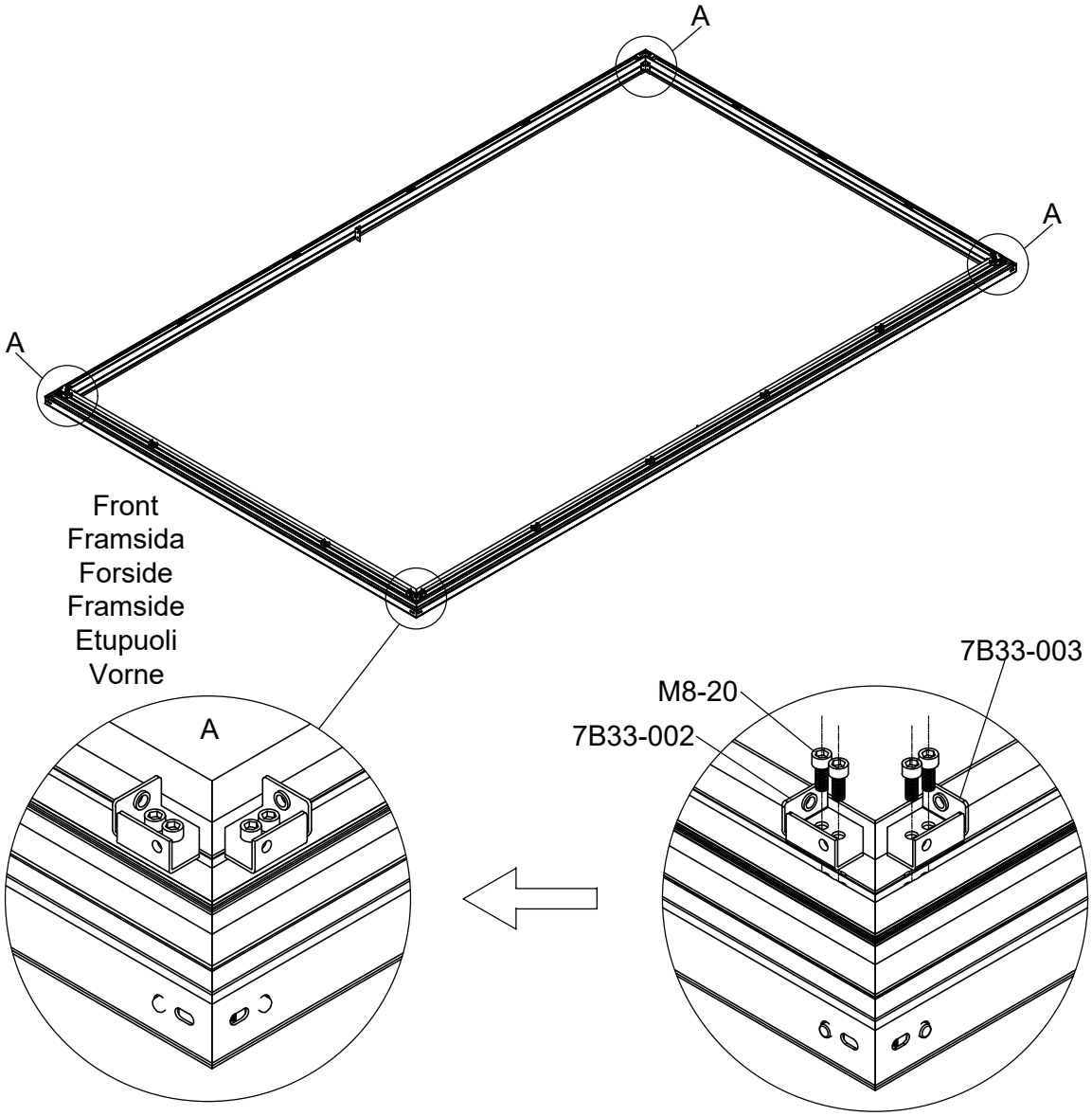

Part	NO.	QTY.	Length(MM)
	41X-Y20	4	1920
	Si8-16	8	PCS
	7B33-020	8	PCS
	M8-20	8	PCS
	7C33-001	8	PCS

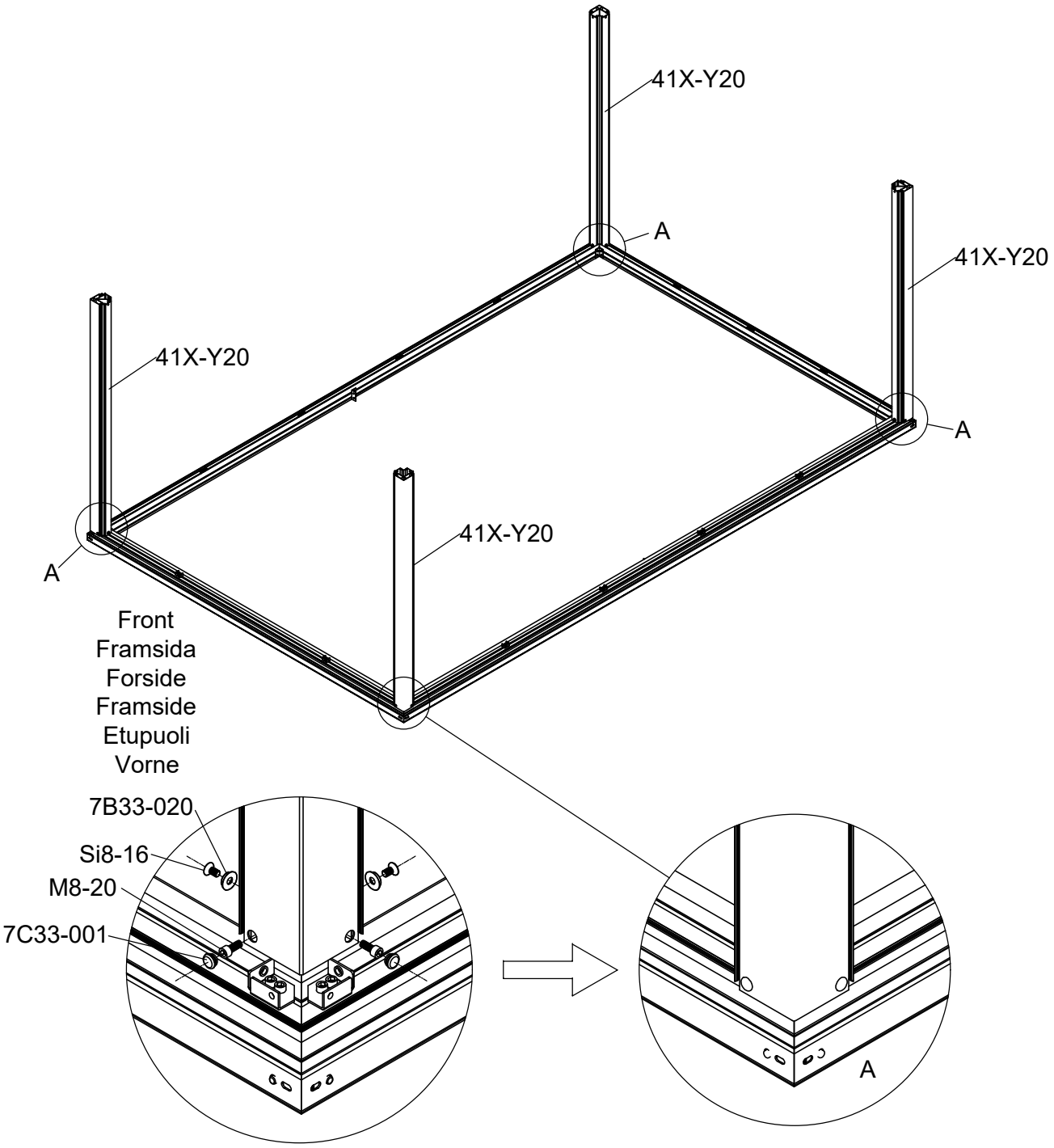

Part	NO.	QTY.	Length(MM)
	41X-Y61	1	3023
	41X-Y60	1	3023
	Si8-16	4	PCS
	7B33-020	4	PCS

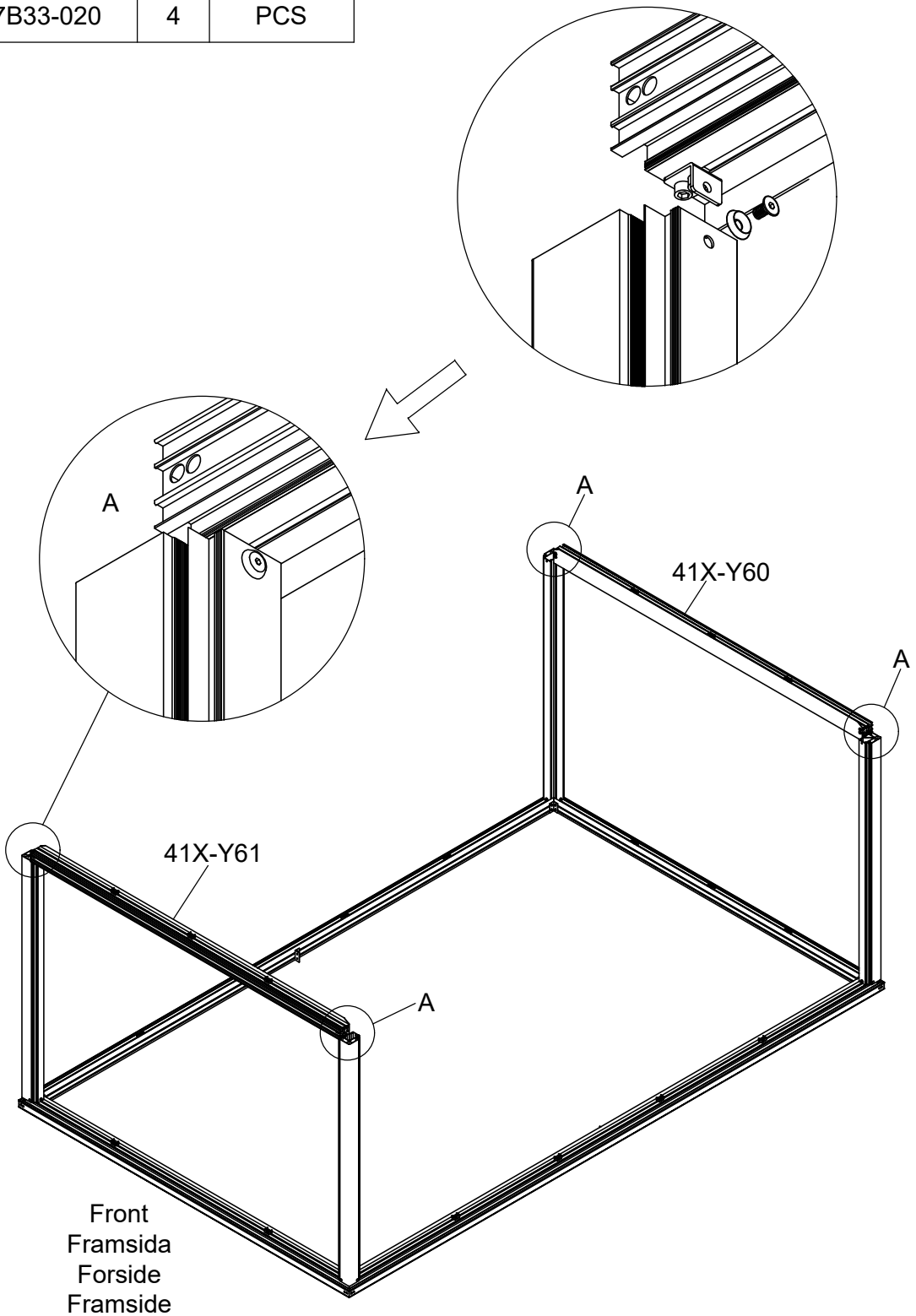

Front
Framsida
Forside
Framside
Etupuoli
Vorne

Part	NO.	QTY.	Length(MM)
	Si8-16	4	PCS
	7B33-020	4	PCS

Part	Product	NO.	Length(MM)	QTY.	Code
	3601	41X-Y62-3	3228	2	A002
	3602	41X-Y62-4	4228		
	3603	41X-Y62-5	5229		
	3604	41X-Y62-6	6230		

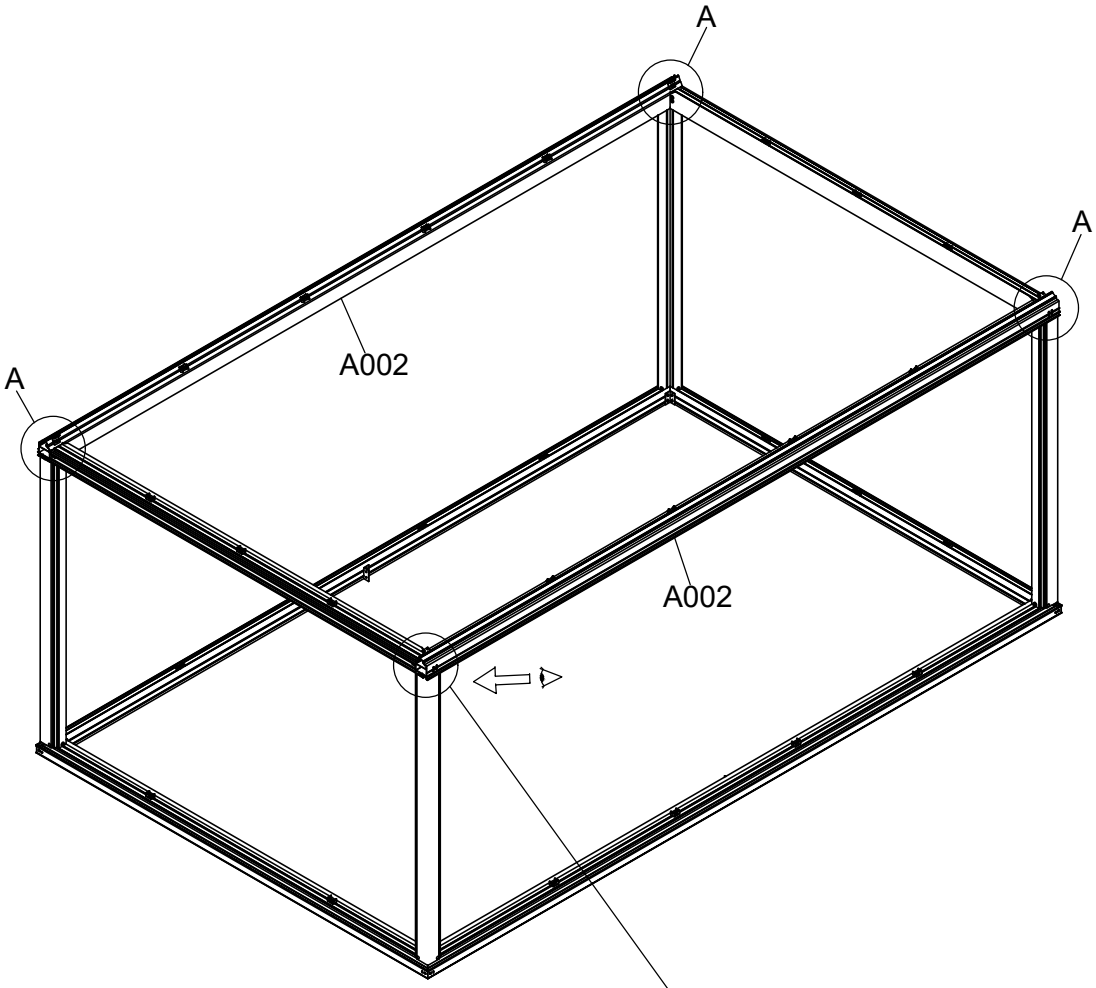

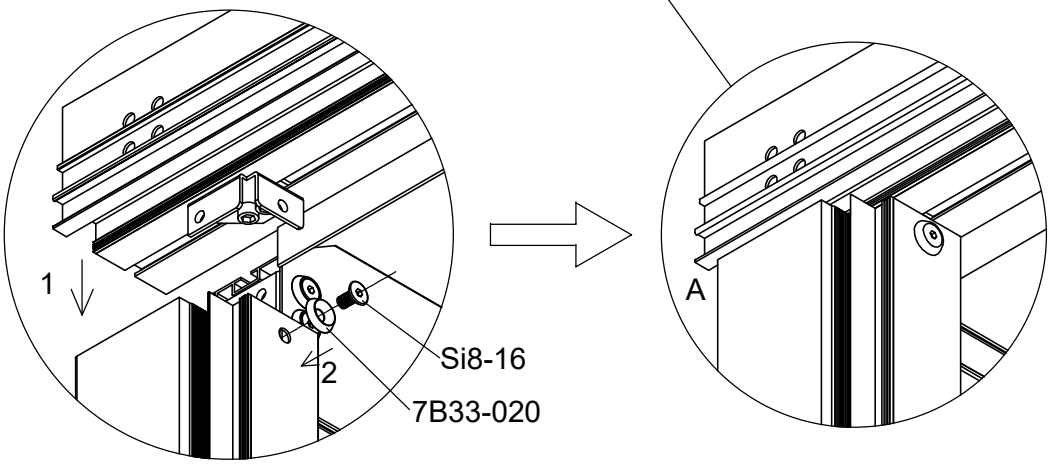

Part	NO.	QTY.	Length(MM)
	7B33-008	4	PCS
	M8-20	16	PCS

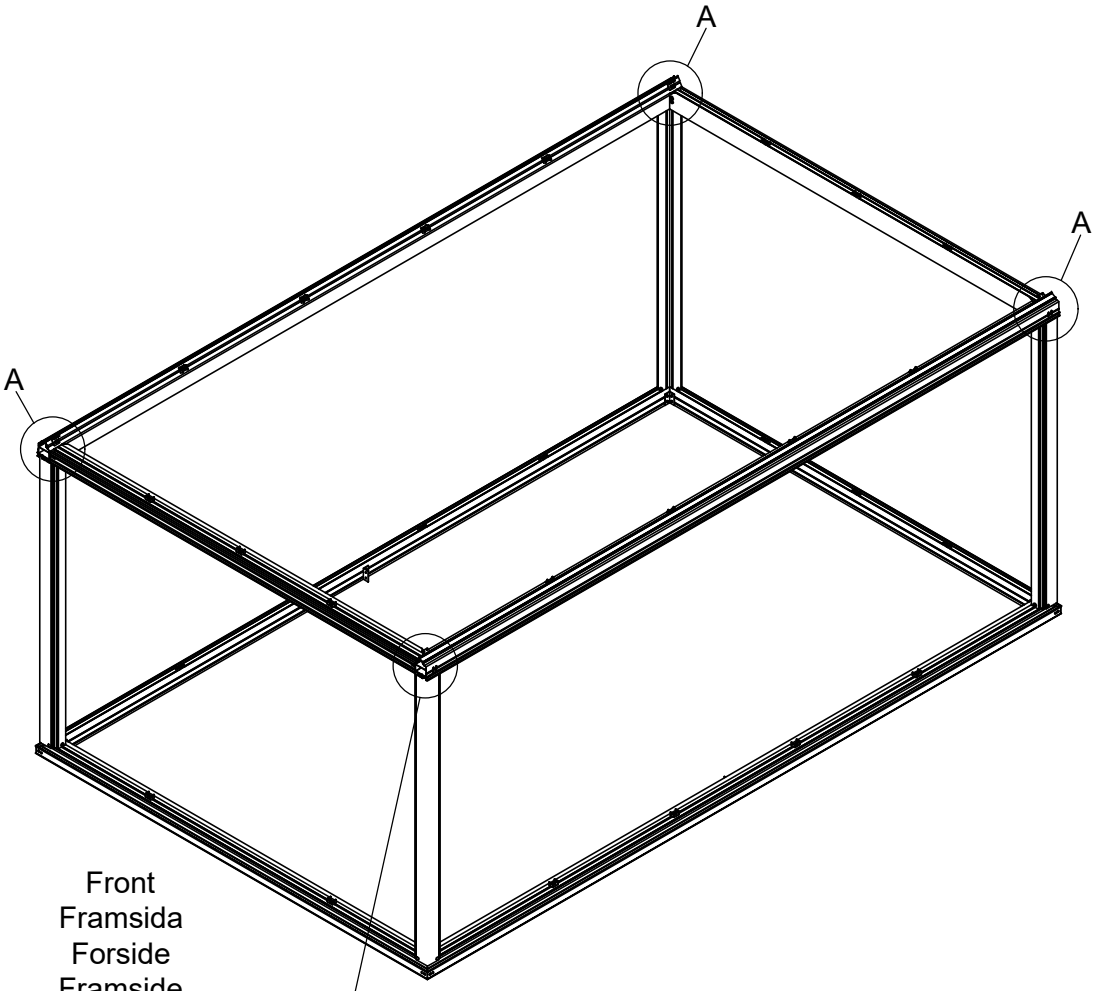

Front
Framsida
Forside
Framside
Etupuoli
Vorne

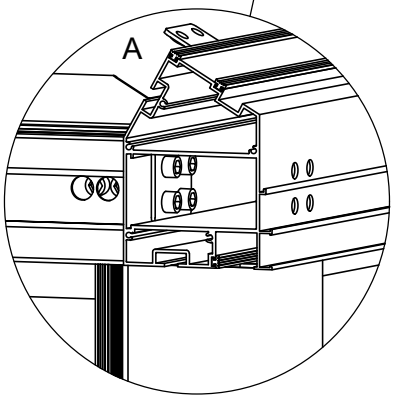

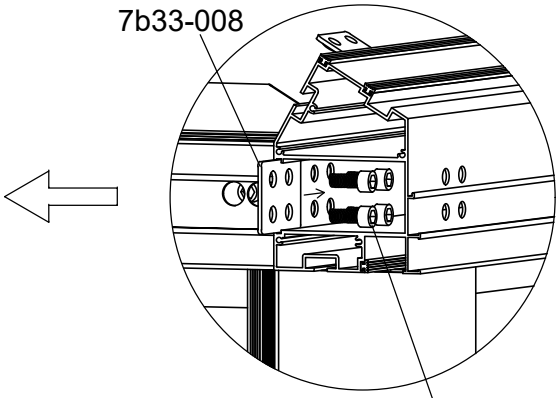

Part	NO.	QTY.				Length(MM)	CTN NO.
		3601	3602	3603	3604		
	7B33-005	0	4	0	4	PCS	3010P-TD
	M8-10	0	8	0	8	PCS	

3601	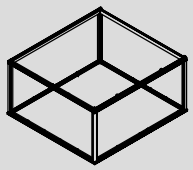
3603	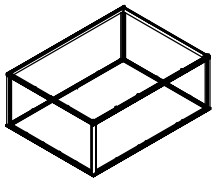

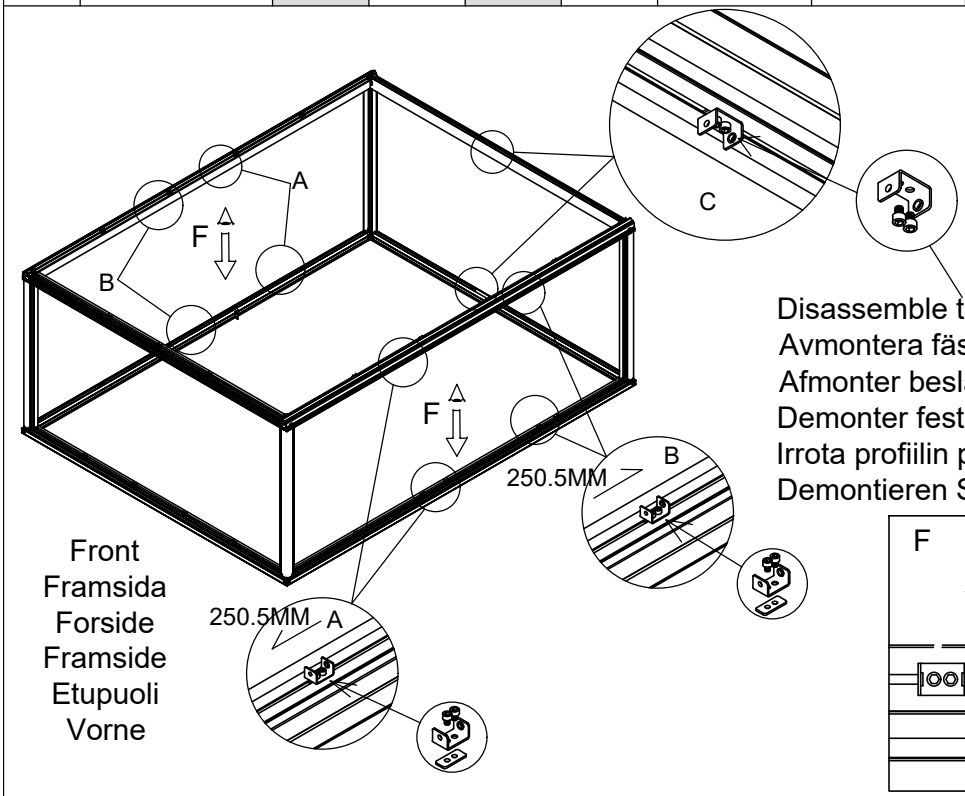

Disassemble this part.
Avmontera fästet från profilen på långsidan.
Afmonter beslaget fra profilen på langsiden.
Demonter festet fra profilen på langsiden.
Irrota profiilin pitkällä sivulla oleva kiinnike.
Demontieren Sie dieses Teil.

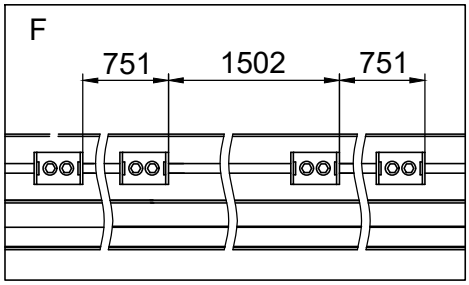

3602	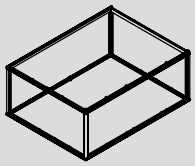
3604	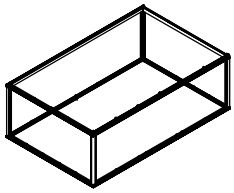

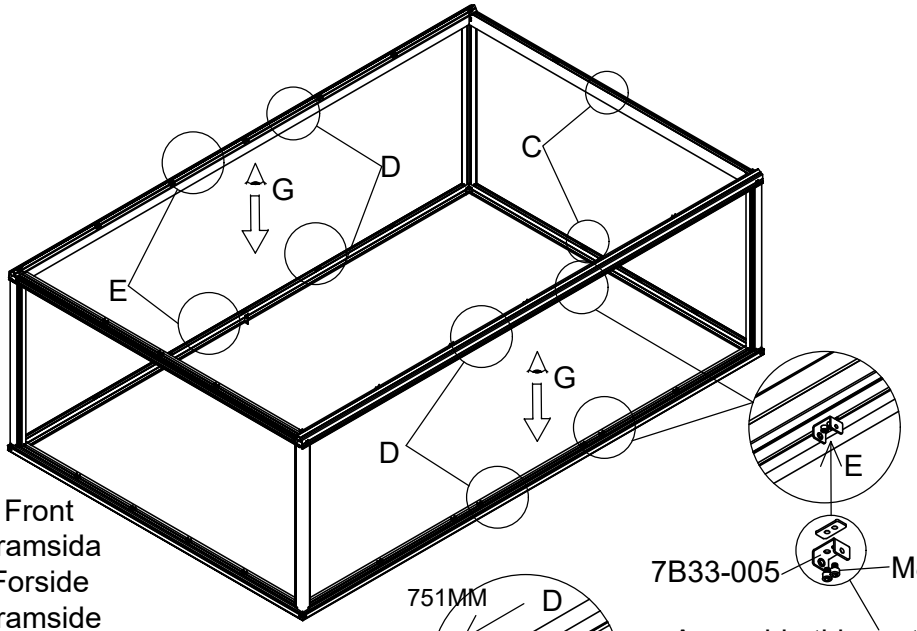

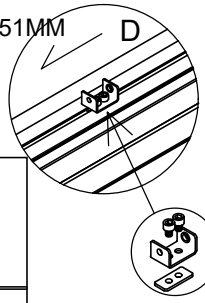

7B33-005 M8-10

Assemble this part to the middle of the profiles.
Montera fästet i mitten av profilen.
Montere beslaget i midten af profilen.
Monter festet i midten av profilen.
Asenna kiinnike profiilin keskelle.
Montieren Sie dieses Teil in der Mitte der Profile.

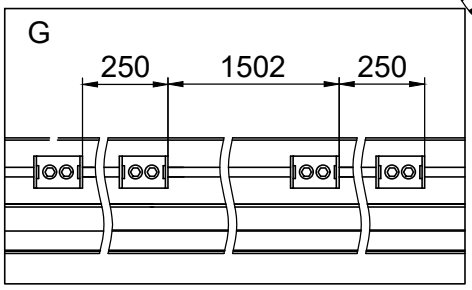

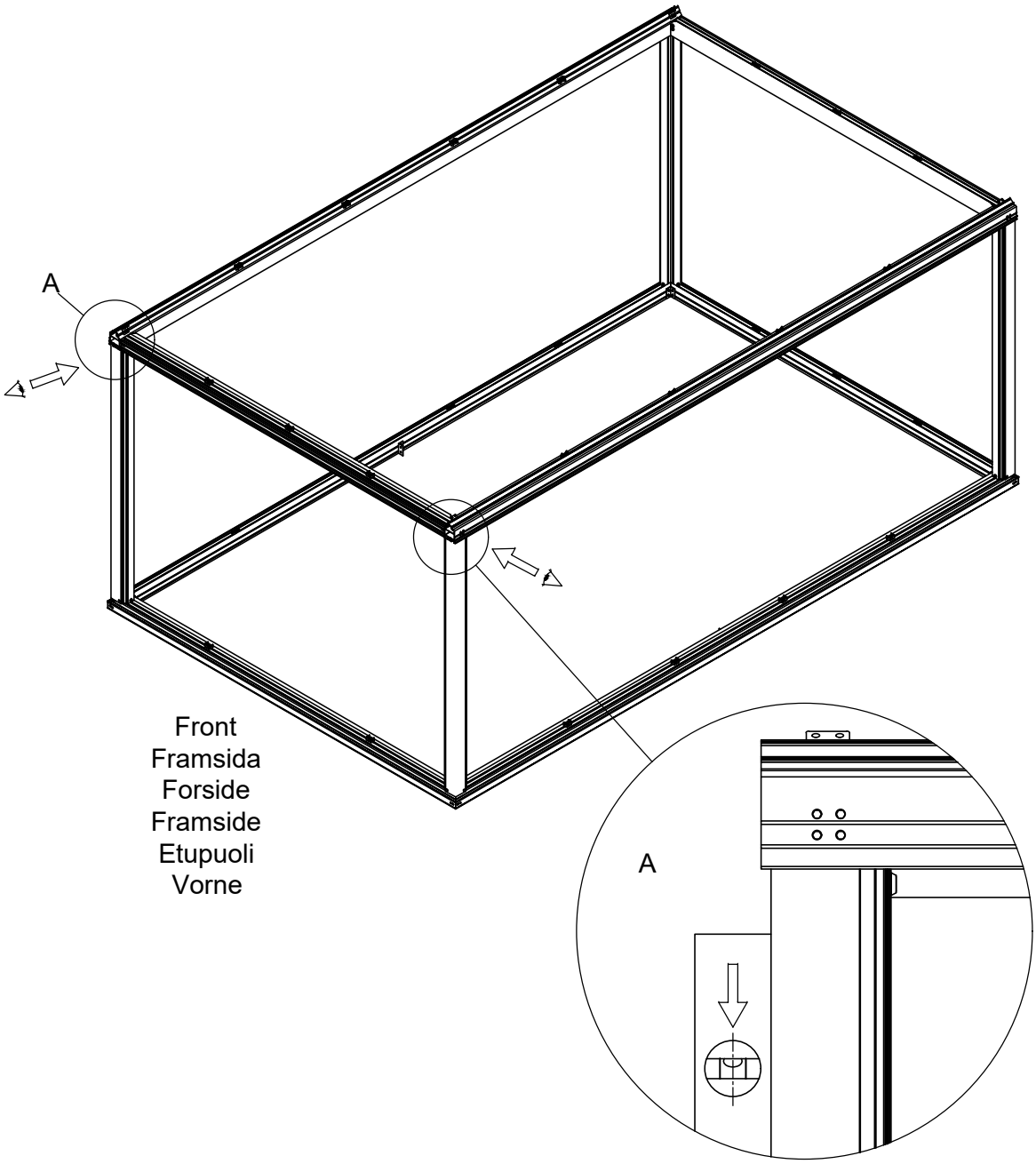
A
A
Front
Framsida
Forside
Framside
Etupuoli
Vorne

Part	NO.	QTY.								Length(MM)
		3601		3602		3603		3604		
		3601	3010P-TD	3602	3010P-TD	3603	3010P-TD	3604	3010P-TD	
	41X-Y30	0	0	4	0	4	0	8	0	1919
	Si8-16	32	0	44	4	48	0	60	4	PCS
	7B33-020	32	0	44	4	48	0	60	4	PCS

Part	NO.	QTY.	Length(MM)	CTN NO.
	41X-Y30-DR	1	1919	
	41X-Y30-DL	1	1919	
	41X-Y30-DR	3	1919	3010P-TD
	41X-Y30-DL	3	1919	3010P-TD

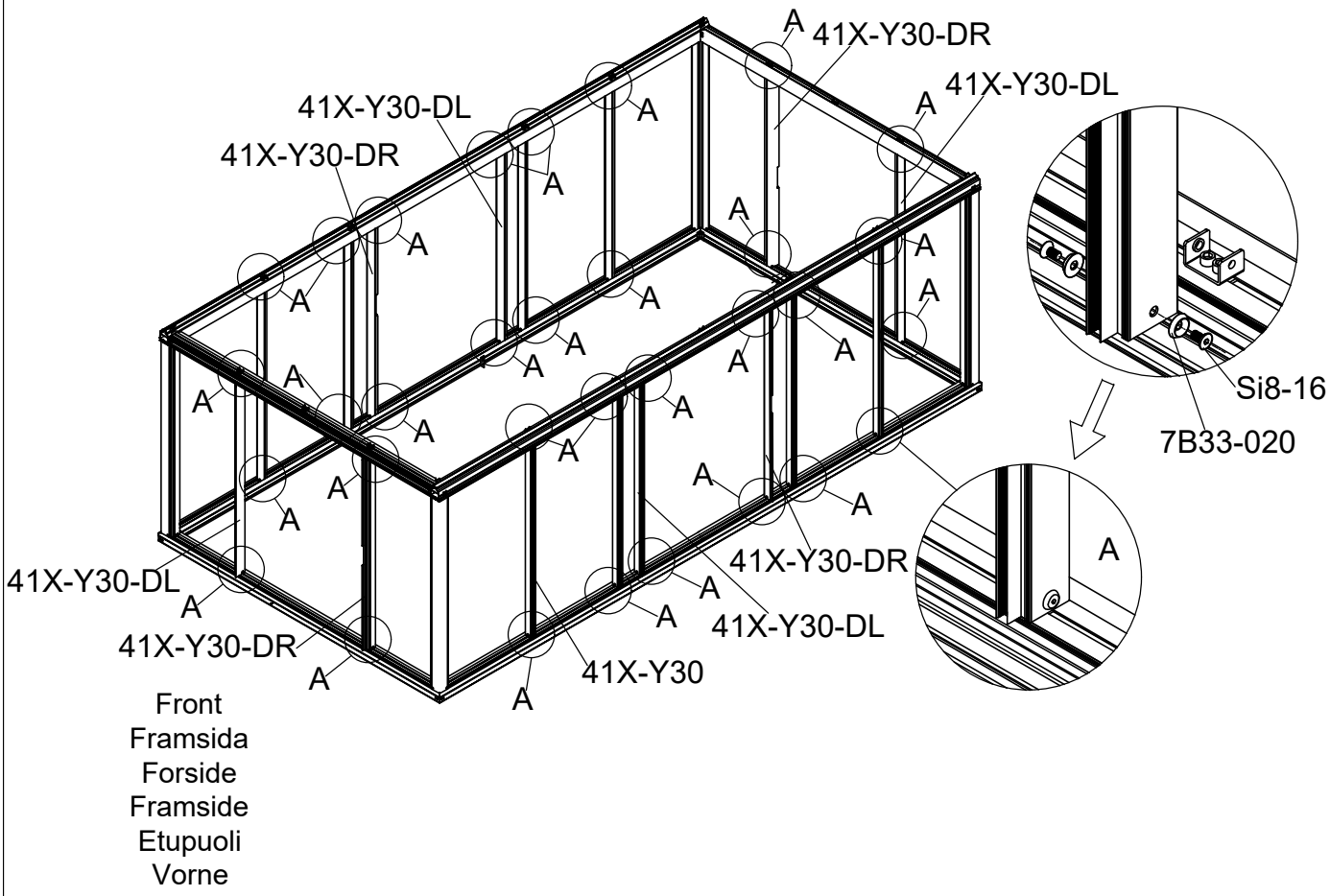

3601	3602	3603	3604
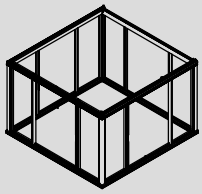	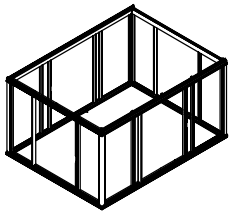	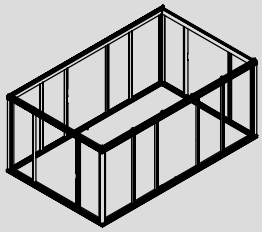	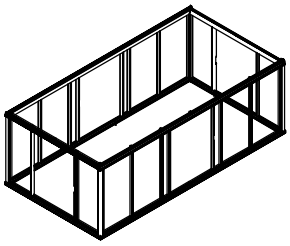

Part	NO.	QTY.	Length(MM)
	41X-Y32	2	857
	Si8-16	4	PCS
	7B33-020	4	PCS

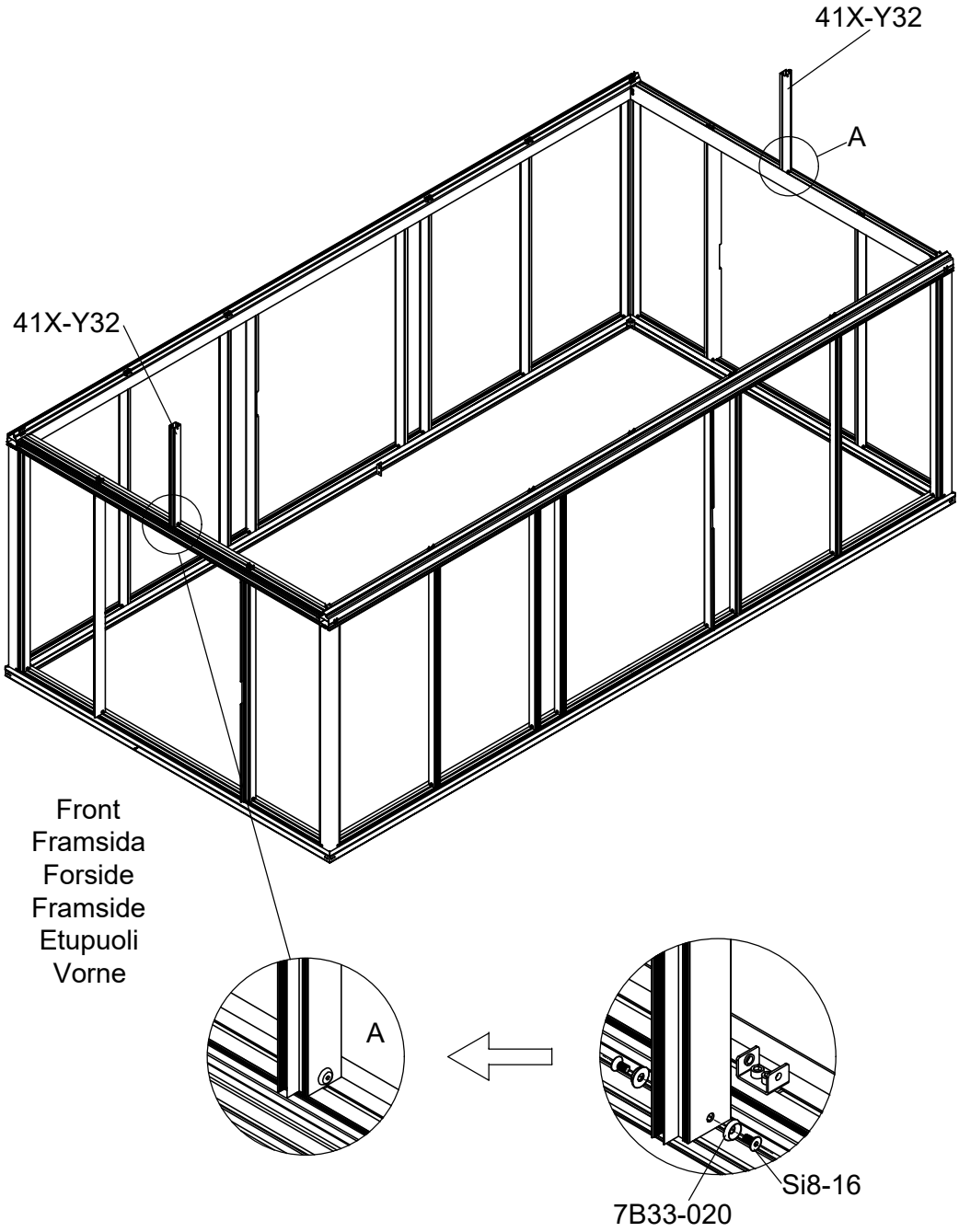

Part	Product	NO.	Length(MM)	QTY.	Code
	3601	41X-Y63-3	3207	1	A003
	3602	41X-Y63-4	4207		
	3603	41X-Y63-5	5208		
	3604	41X-Y63-6	6209		

Part	NO.	QTY.	Length(MM)
	M8-20	4	PCS

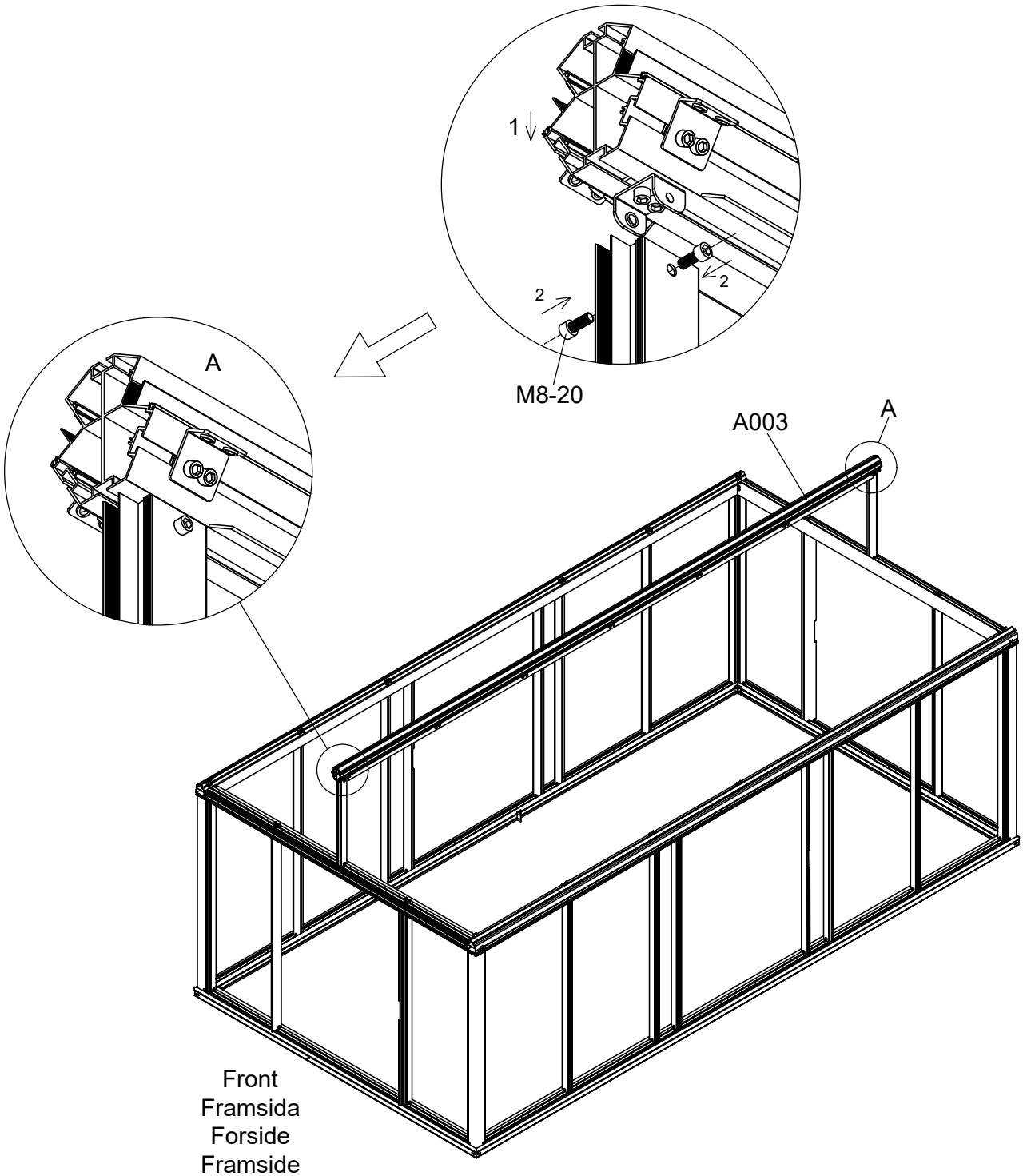

Part	NO.	QTY.	Length(MM)
	41X-Y21	2	1715
	41X-Y22	2	1715
	Si8-16	16	PCS
	7B33-020	16	PCS

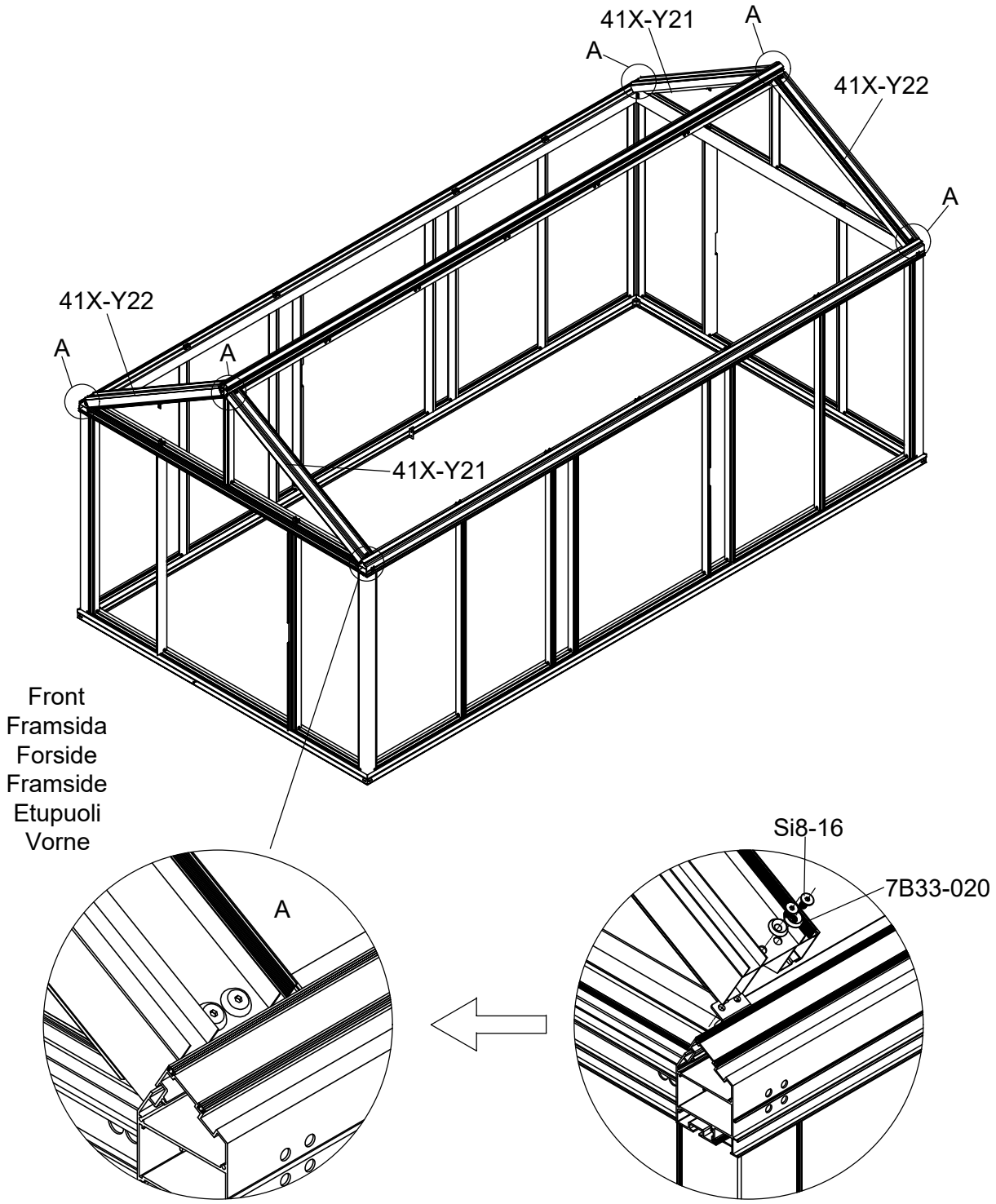

Part	NO.	QTY.	Length(MM)
	41X-Y31R	2	412
	41X-Y31L	2	412
	M8-20	8	PCS
	Si8-16	8	PCS
	7B33-020	8	PCS

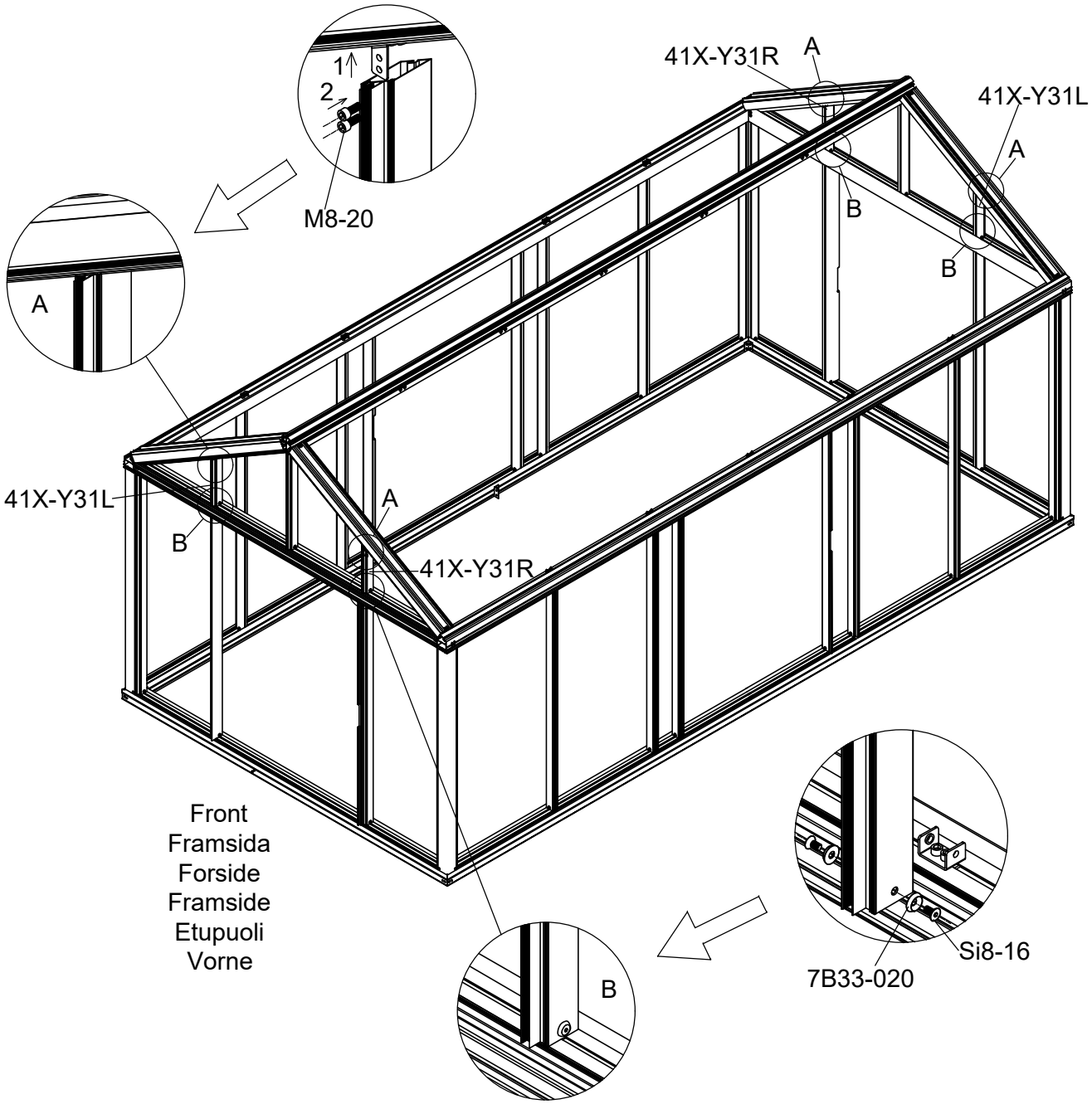

Part	NO.	QTY.				Length(MM)
		3601	3602	3603	3604	
	41X-Y33R	2	2	4	4	1715
	41X-Y33L	2	2	4	4	1715
	41X-Y34	2	2	4	4	951
	M8-20	8	8	16	16	PCS
	7C33-001	8	8	16	16	PCS

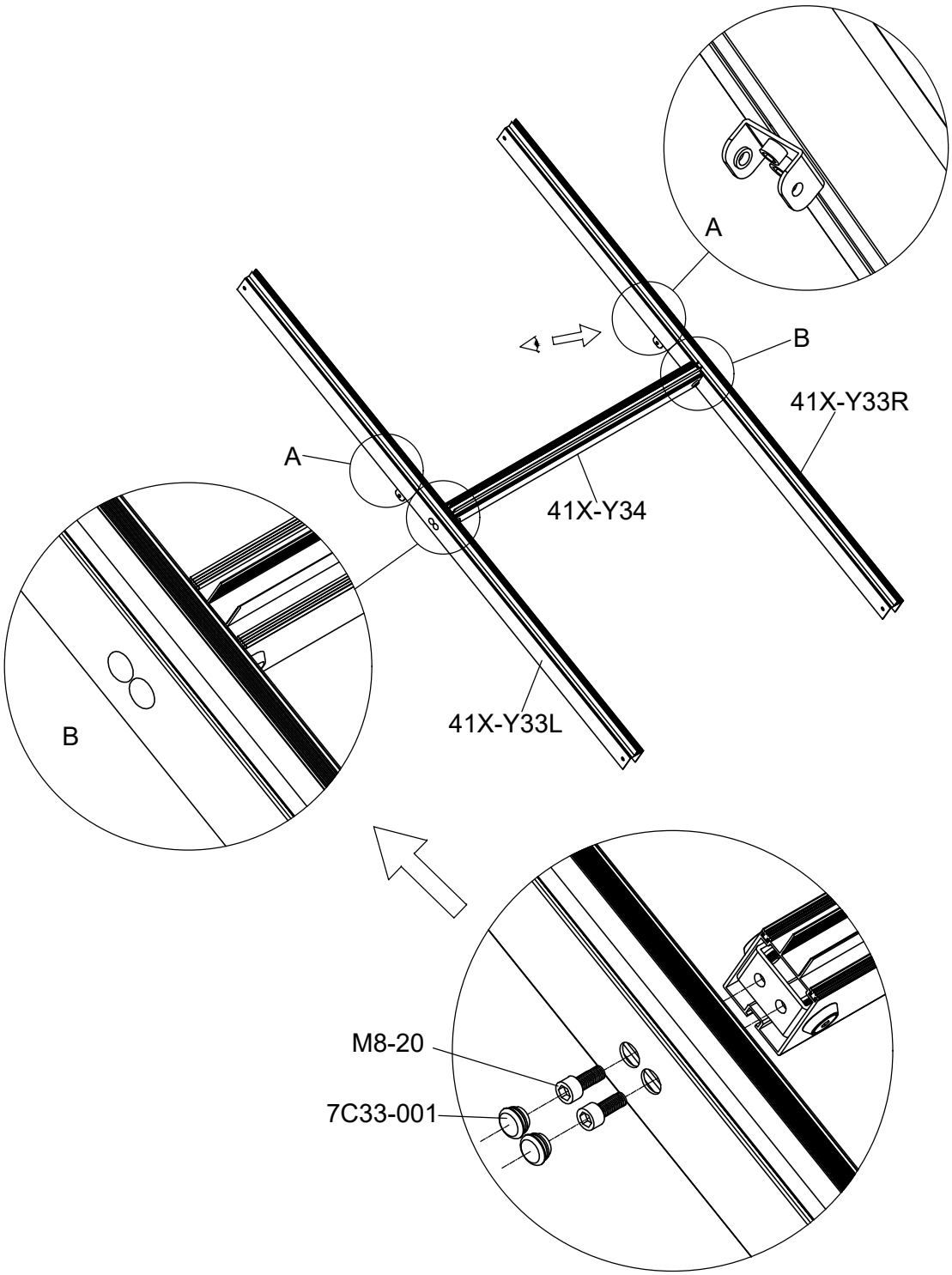

Part	NO.	QTY.				Length(MM)
		3601	3602	3603	3604	
	41X-Y33	0	2	0	2	1715

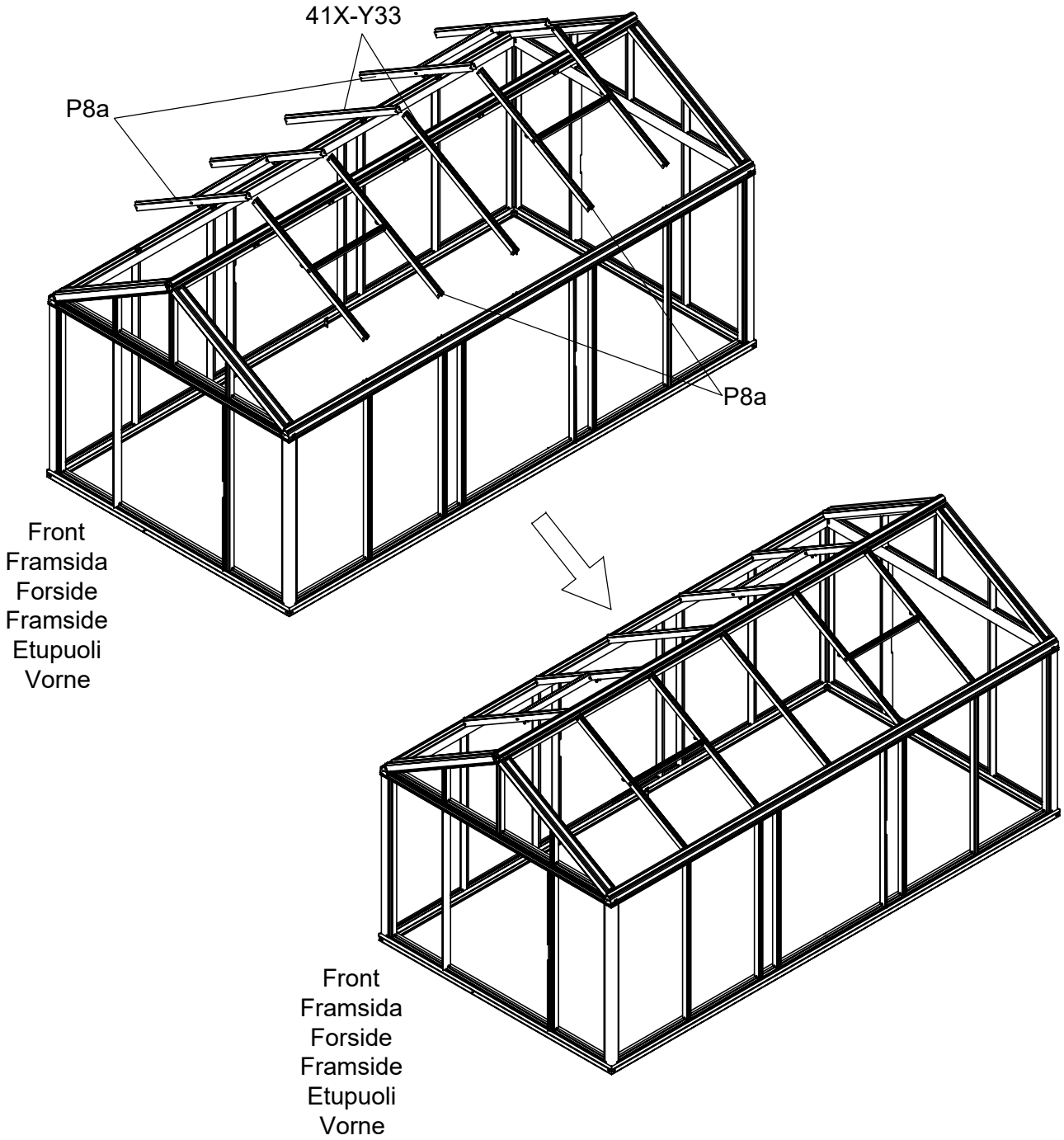

3601	3602	3603	3604
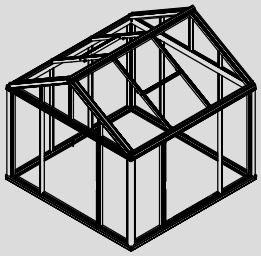	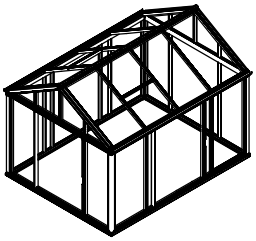	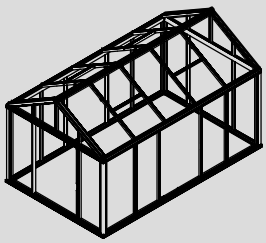	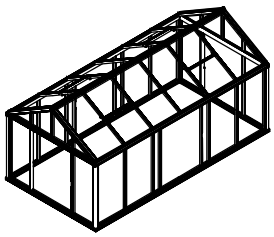

Part	NO.	QTY.				Length(MM)
		3601	3602	3603	3604	
	Si8-16	16	24	32	40	PCS
	7B33-020	16	24	32	40	PCS

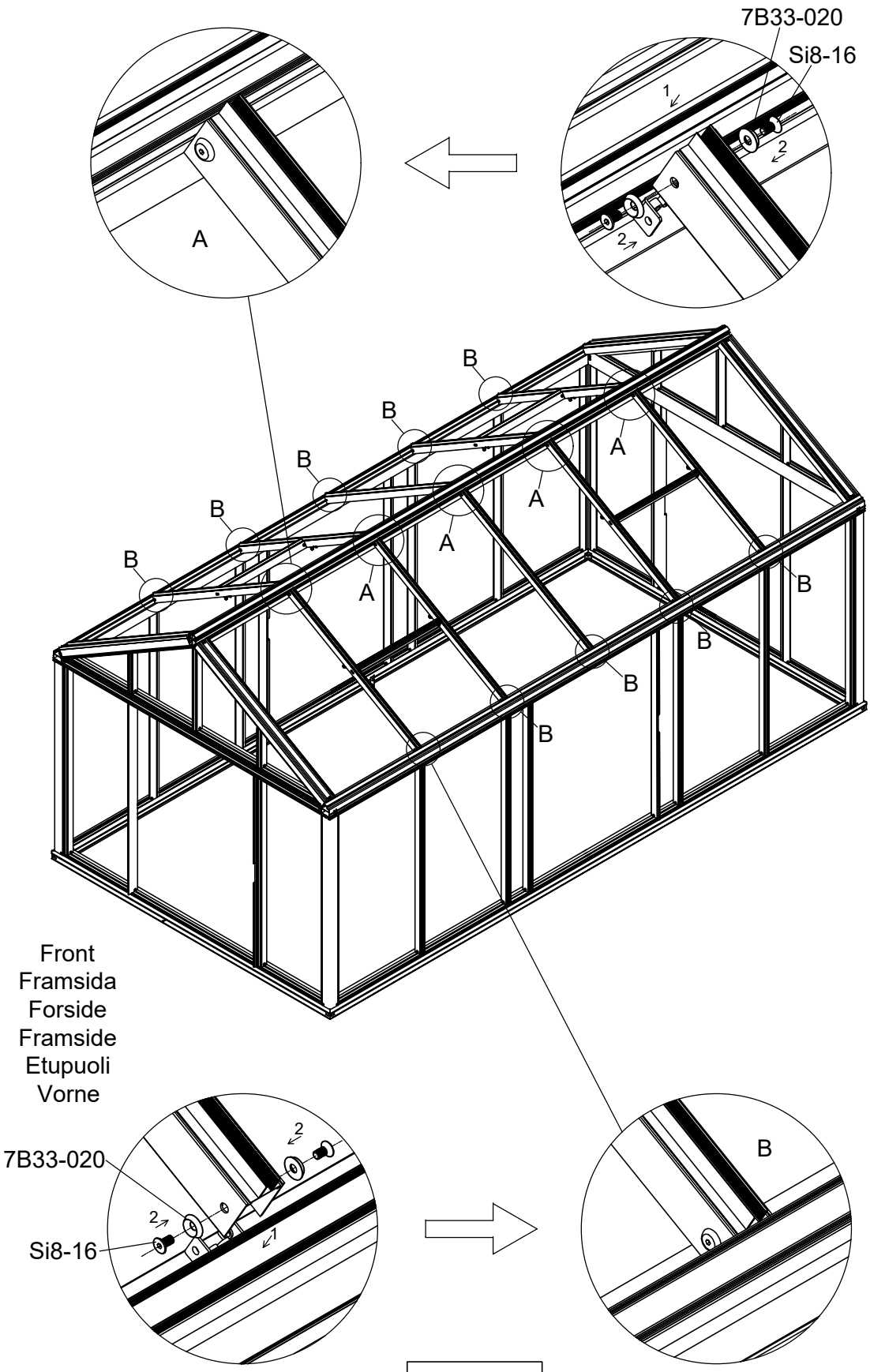

Part	NO.	QTY.				Length(MM)
		3601	3602	3603	3604	
	7C28-004	8	10	12	14	PCS
	Z4.2-13	16	20	24	28	PCS

Part	Product	NO.	Length(MM)	QTY.	Code
	3601	41X-Y62-3BR	3228	1	A004
	3602	41X-Y62-4BR	4228		
	3603	41X-Y62-5BR	5229		
	3604	41X-Y62-6BR	6230		
	3601	41X-Y62-3BL	3228	1	A005
	3602	41X-Y62-4BL	4228		
	3603	41X-Y62-5BL	5229		
	3604	41X-Y62-6BL	6230		

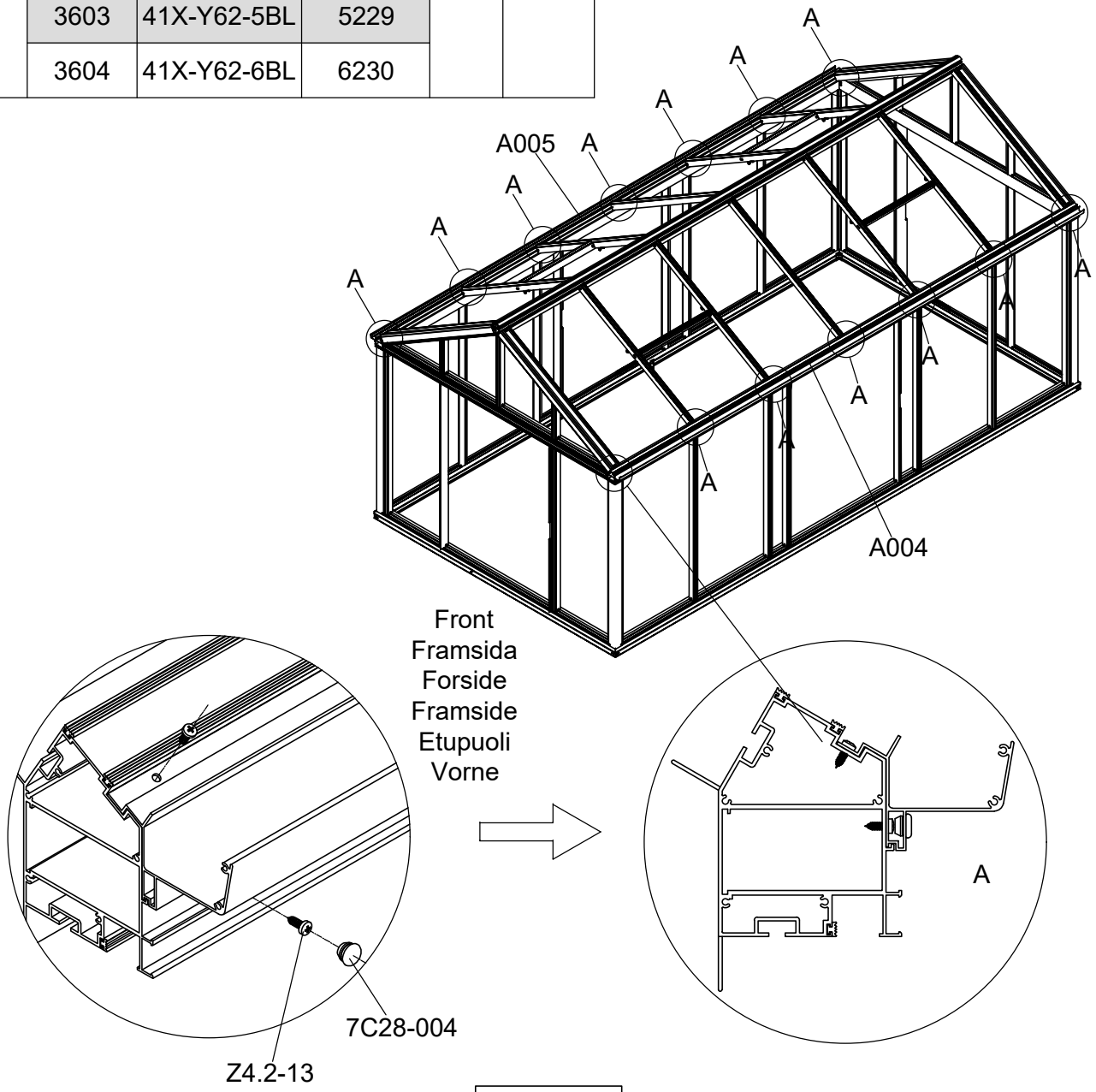

Part	NO.	QTY.				Length(MM)
		3601	3602	3603	3604	
	41X-Y35	2	3	4	5	1500
	Si8-16	8	12	16	20	PCS
	7B33-020	8	12	16	20	PCS

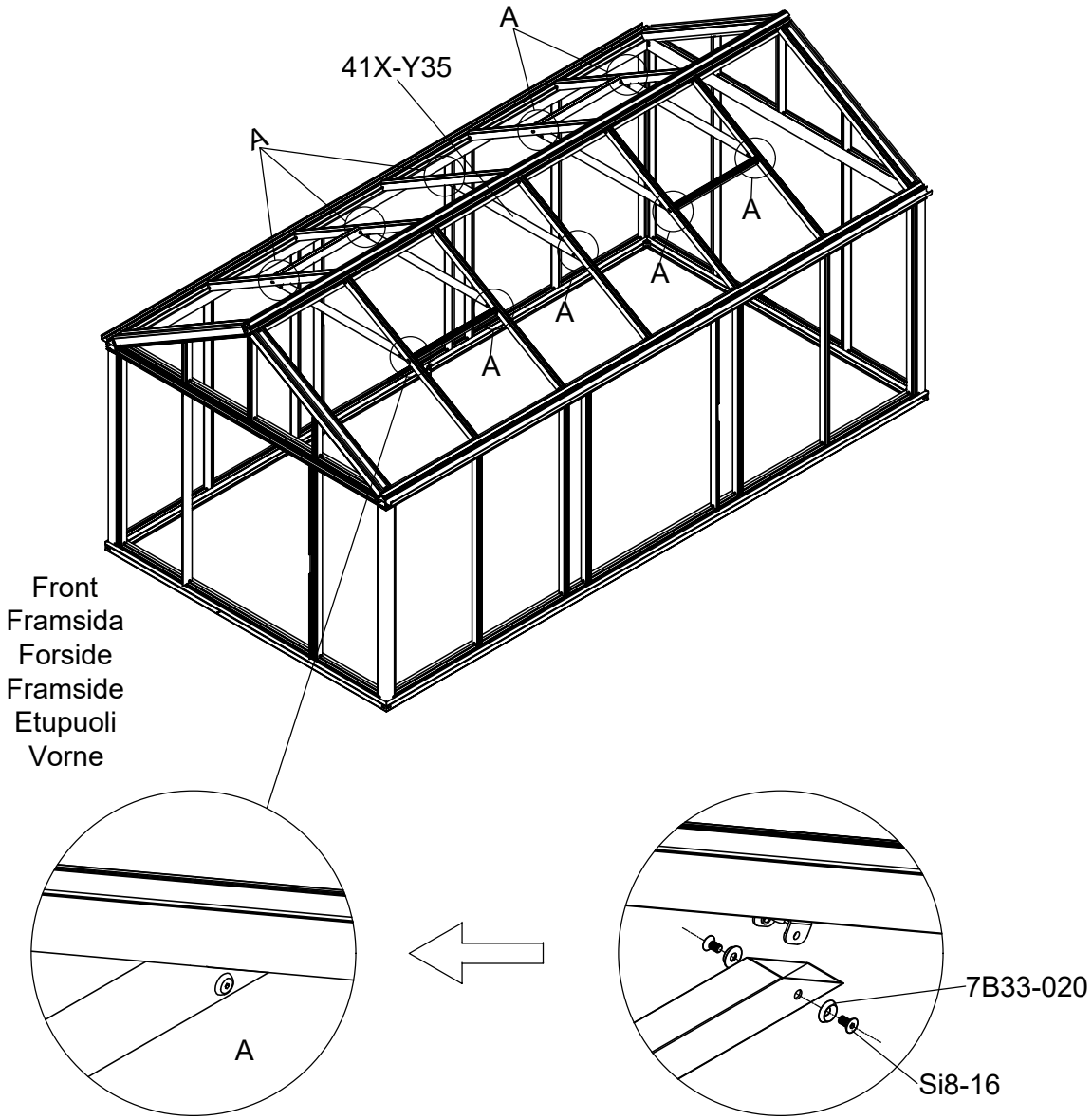

3601	3602	3603	3604
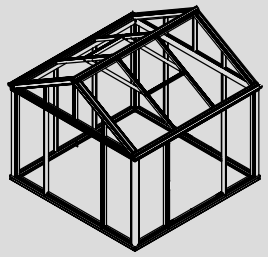	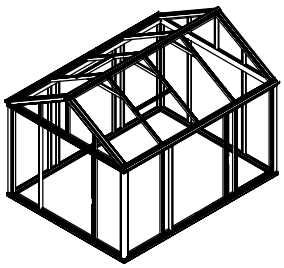	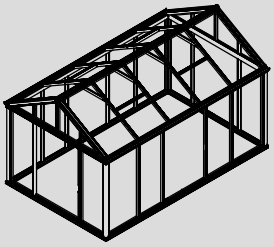	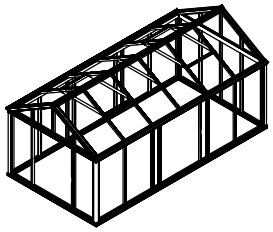

Part	NO.	QTY.				Length(MM)
		3601	3602	3603	3604	
	J12	24	36	36	48	PCS

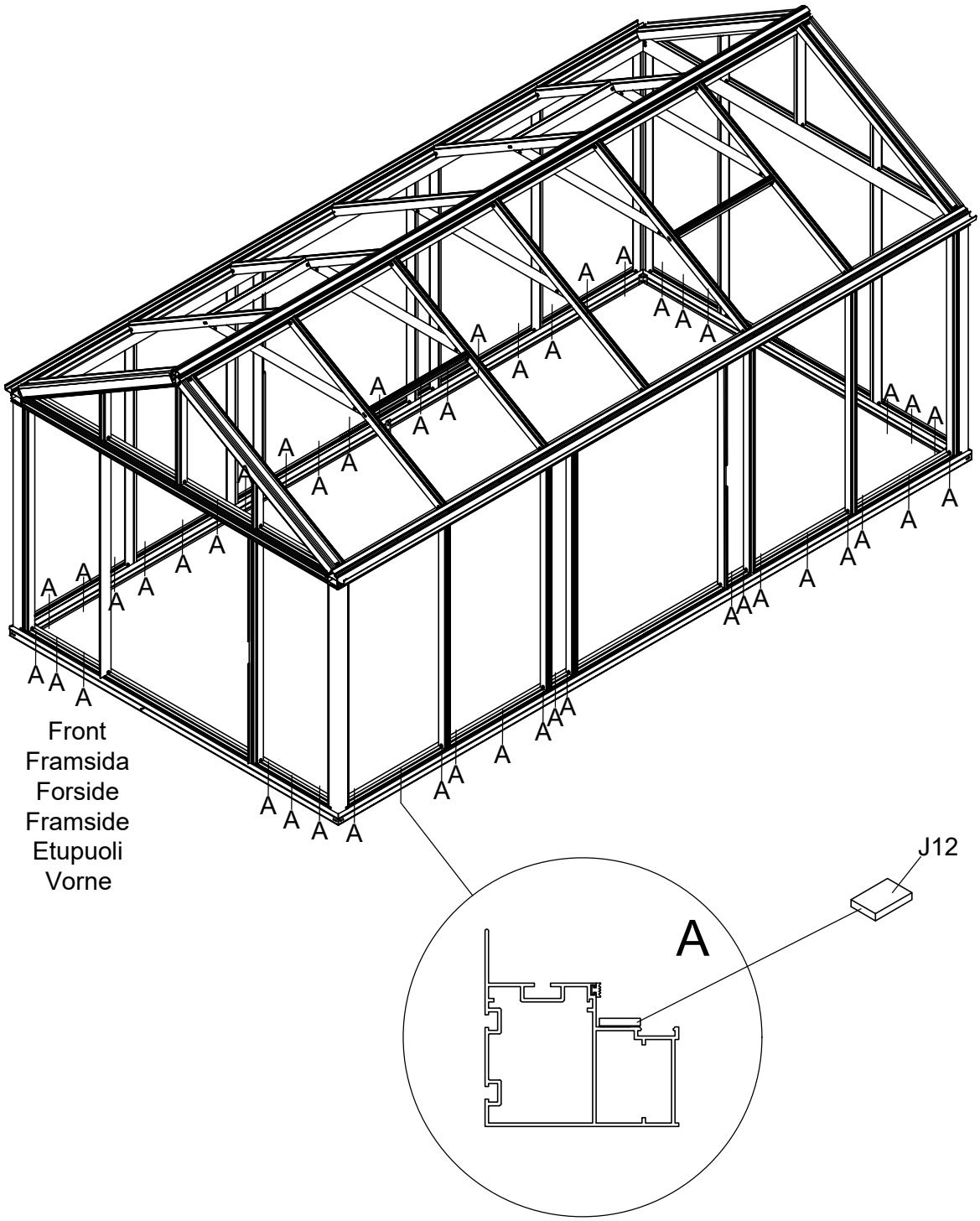

Part	NO.	QTY.				Length(MM)
		3601	3602	3603	3604	
	730×1953	4	2	4	2	1953
	980×1953	0	2	2	4	1953
	228×1953	0	2	0	2	1953

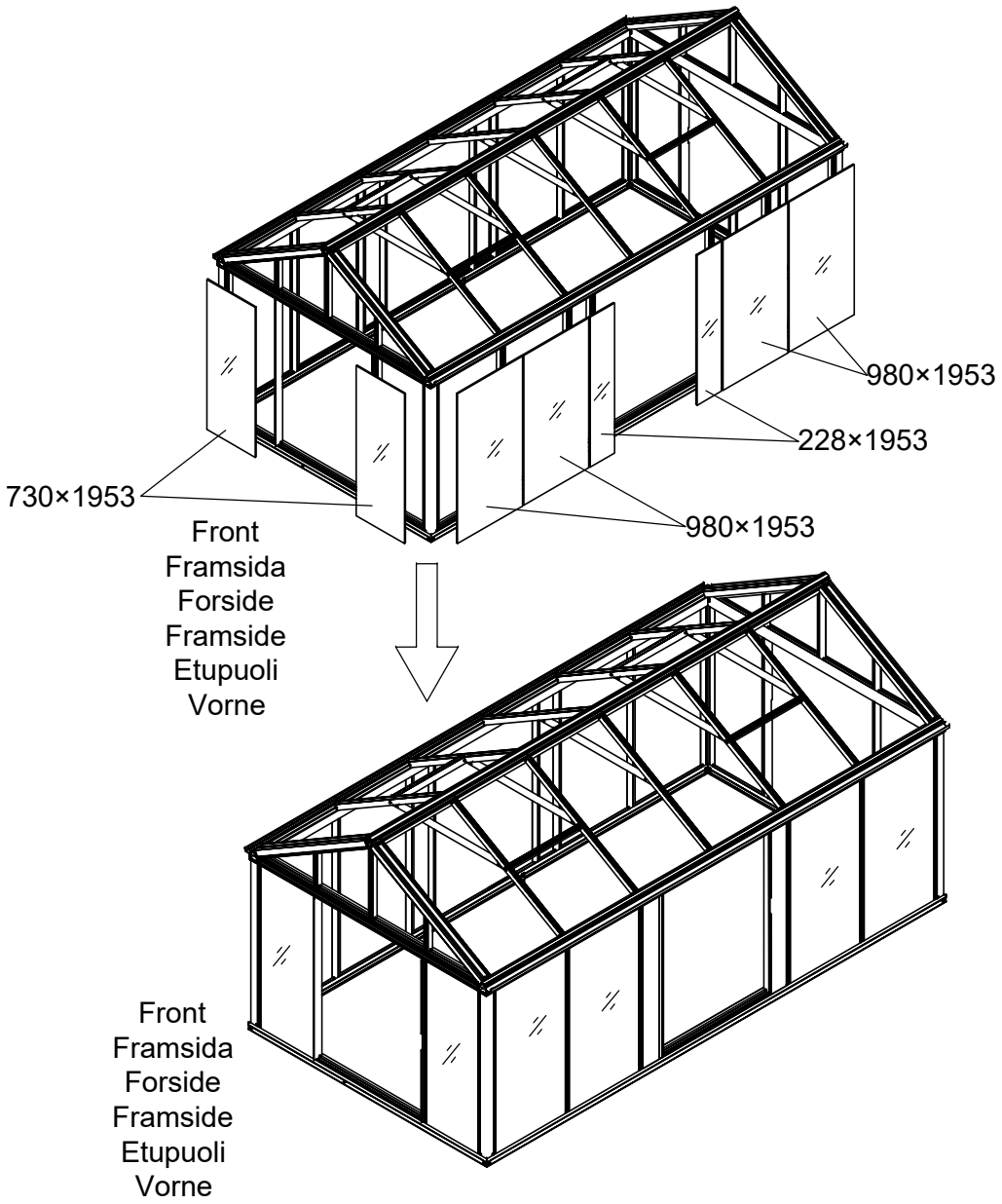

3601	3602	3603	3604
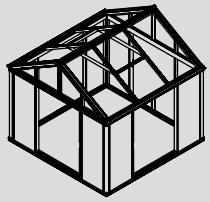	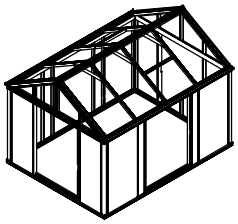	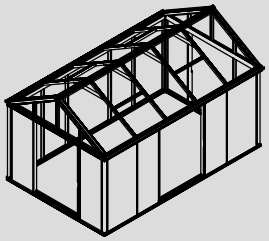	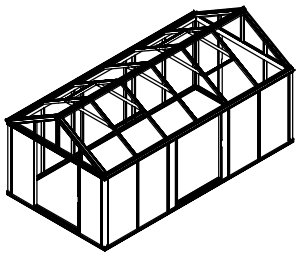

Part	NO.	QTY.				Length(MM)
		3601	3602	3603	3604	
	730×1953	4	2	4	2	1953
	980×1953	0	2	2	4	1953
	228×1953	0	2	0	2	1953

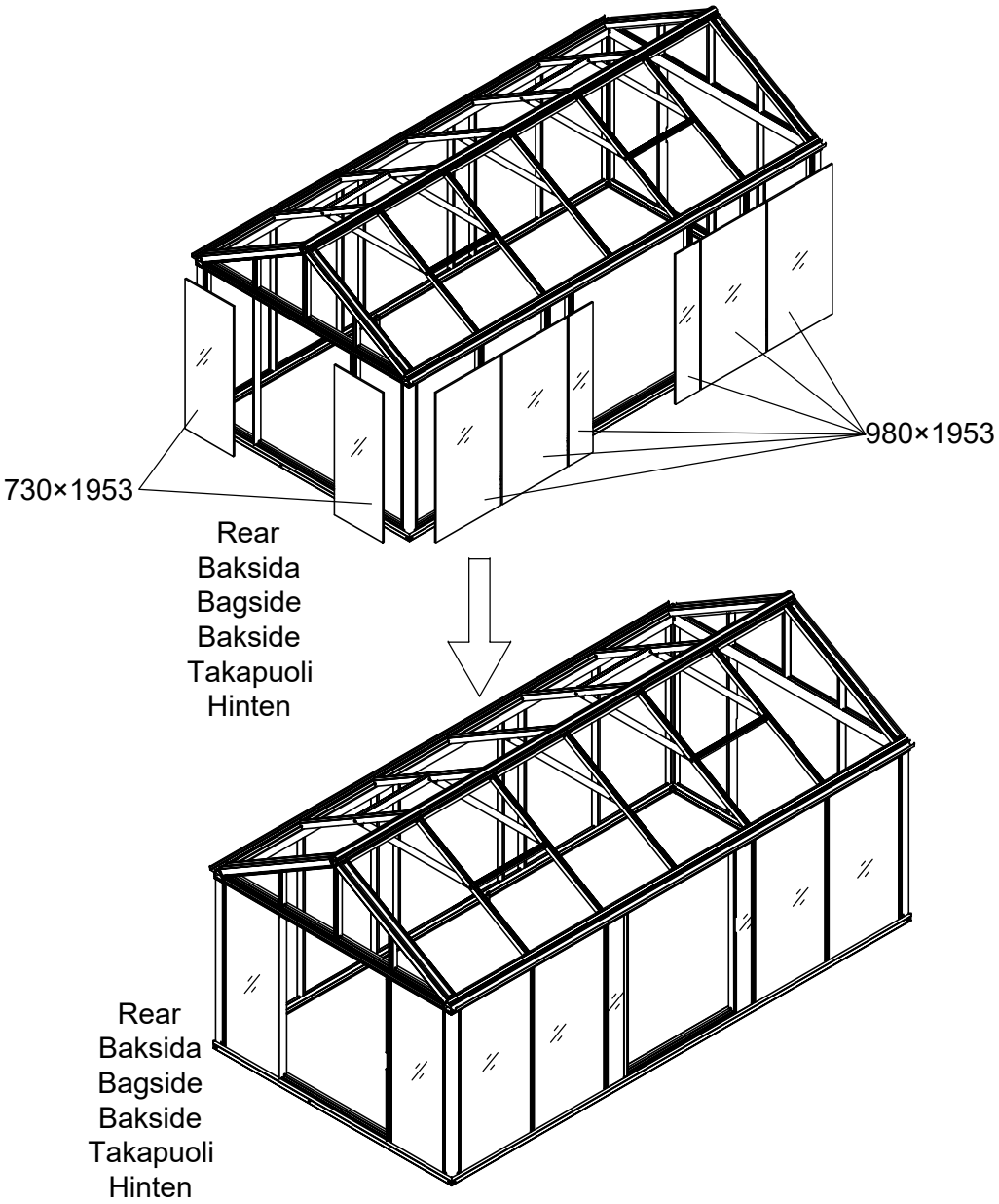

3601	3602	3603	3604
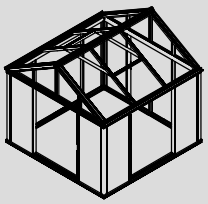	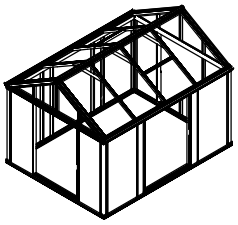	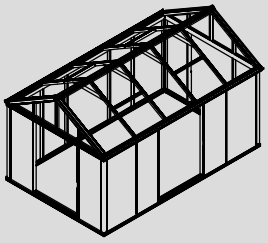	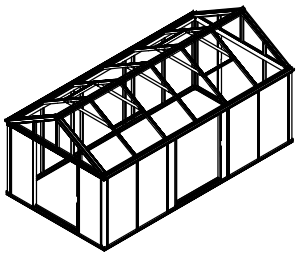

Part	NO.	QTY.	Length(MM)
	41X-Y15-3	2	3239

Part	Product	NO.	Length(MM)	QTY.	Code
	3601	41X-Y15-3	3239	2	A006
	3602	41X-Y15-4	4239		
	3603	41X-Y15-5	5240		
	3604	41X-Y15-6	6241		

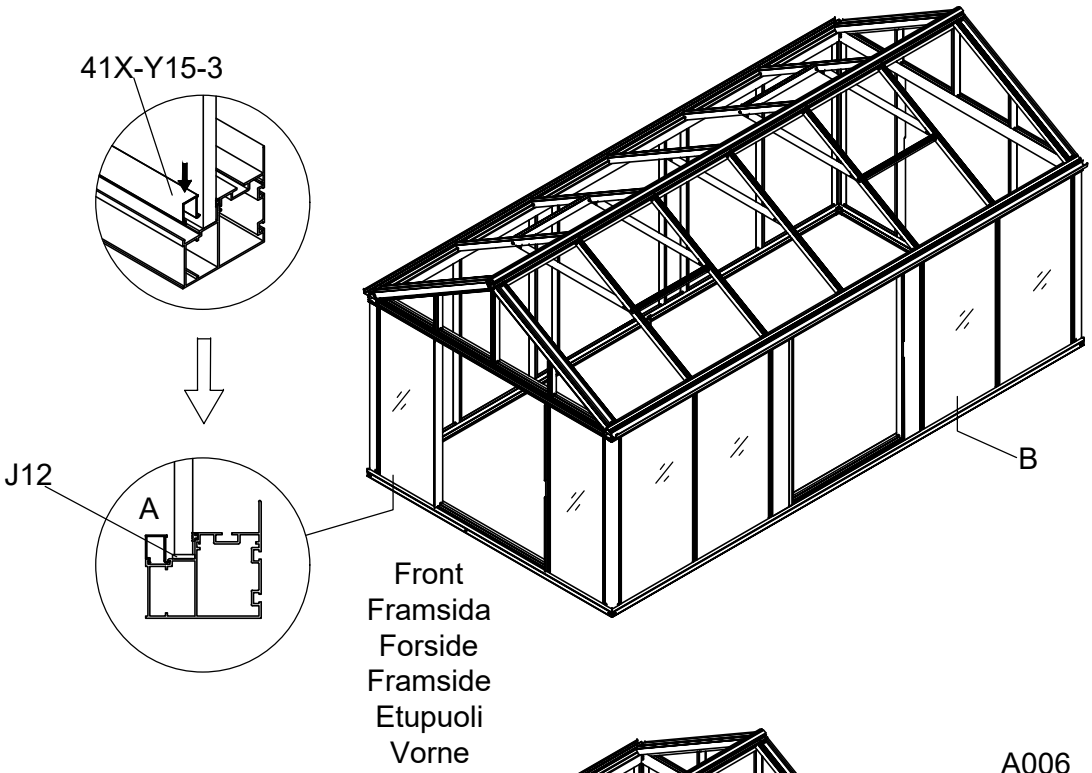

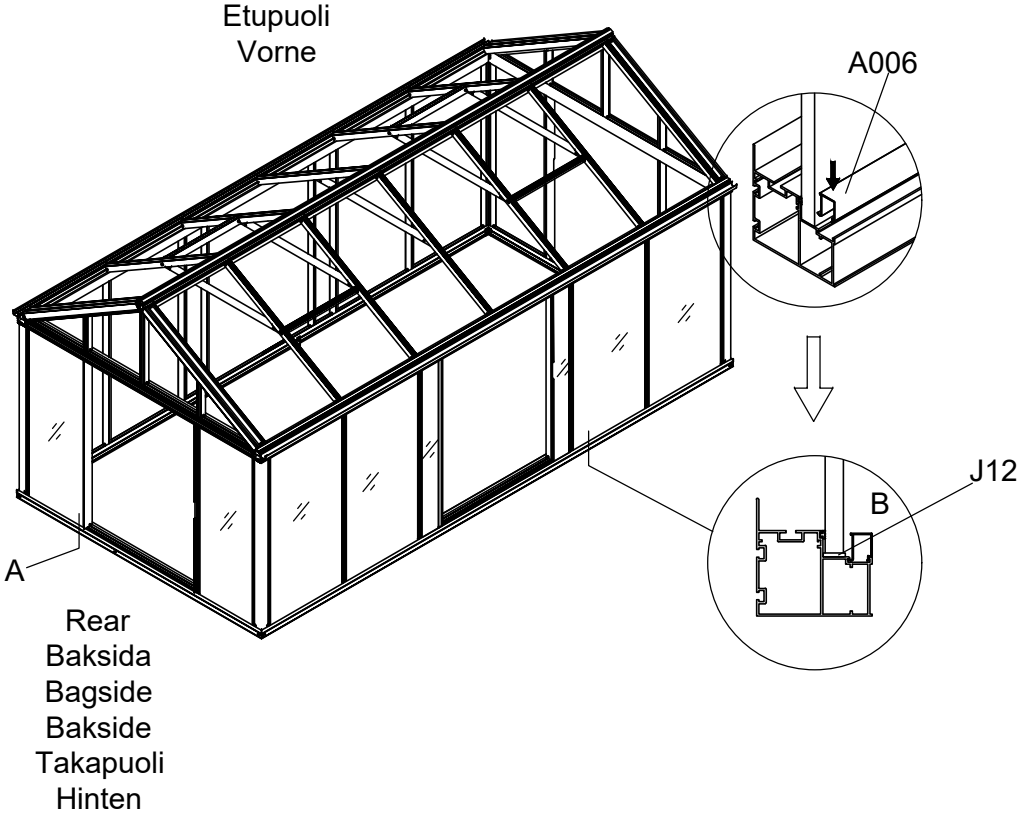

Part	NO.	QTY.				Length(MM)
		3601	3602	3603	3604	
	41X-Y01	0	2	2	4	1919

Part	NO.	QTY.	Length(MM)	CTN NO.
	41X-Y02	6	1919	
	41X-Y02	2	1919	3010P-TD

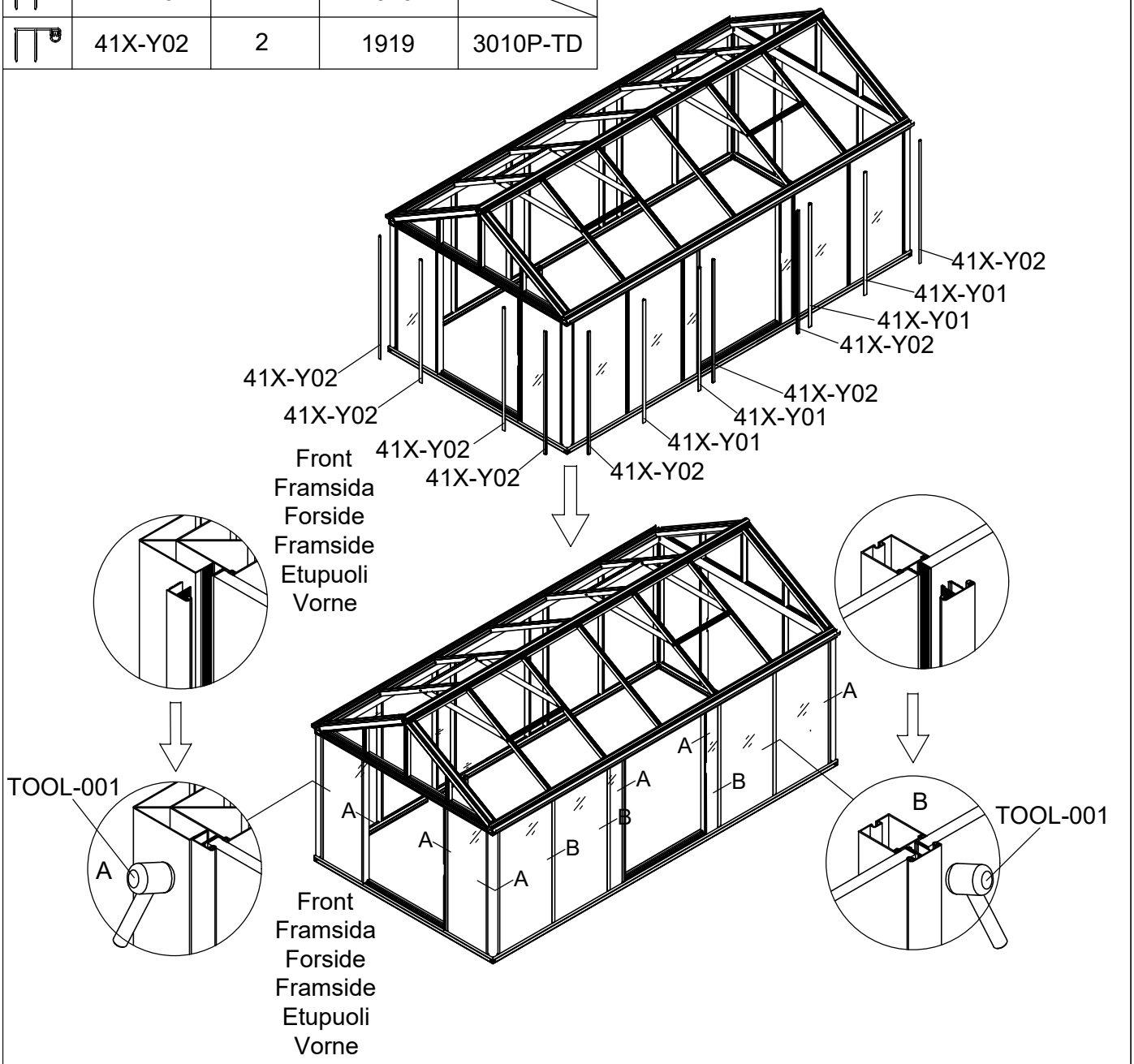

3601	3602	3603	3604
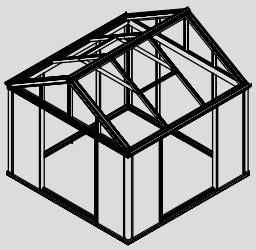	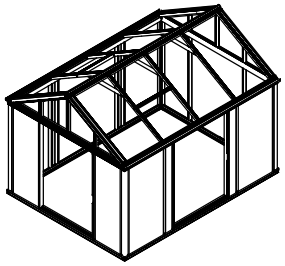	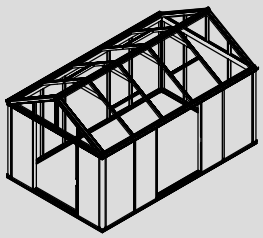	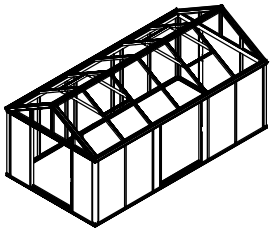

Part	NO.	QTY.				Length(MM)
		3601	3602	3603	3604	
	41X-Y01	0	2	2	4	1919

Part	NO.	QTY.	Length(MM)	CTN NO.
	41X-Y02	4	1919	
	41X-Y02	4	1919	3010P-TD

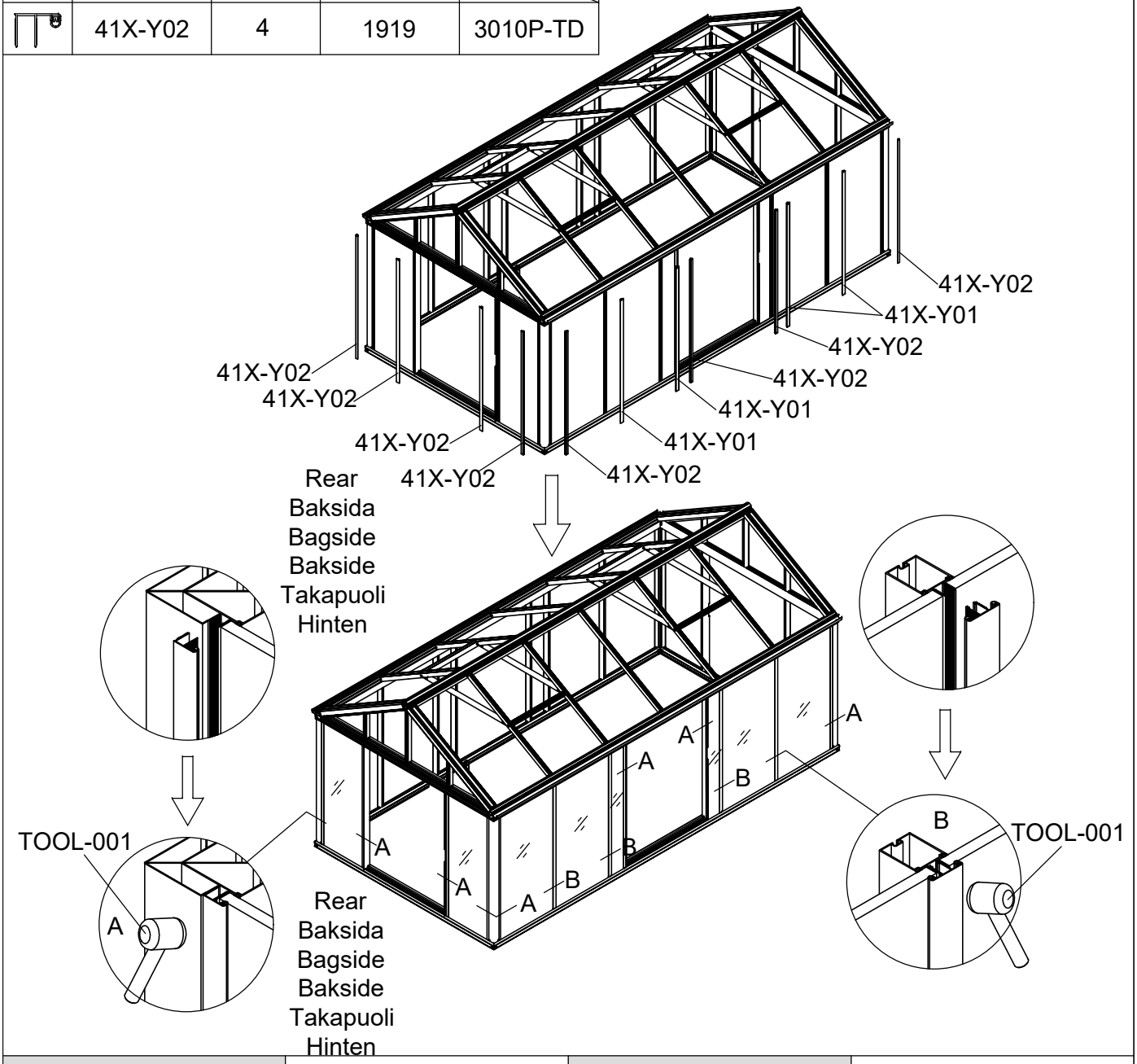

3601	3602	3603	3604
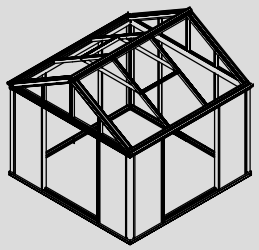	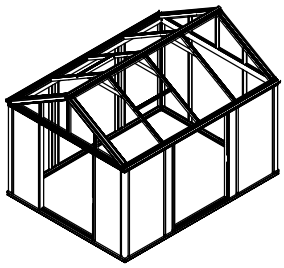	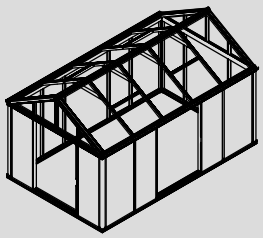	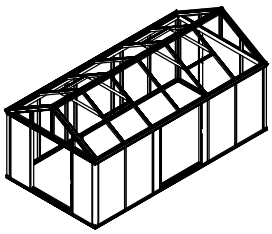

Part	NO.	QTY.				Length(MM)
		3601	3602	3603	3604	
	7C26-009A	12M	16M	20M	24M	

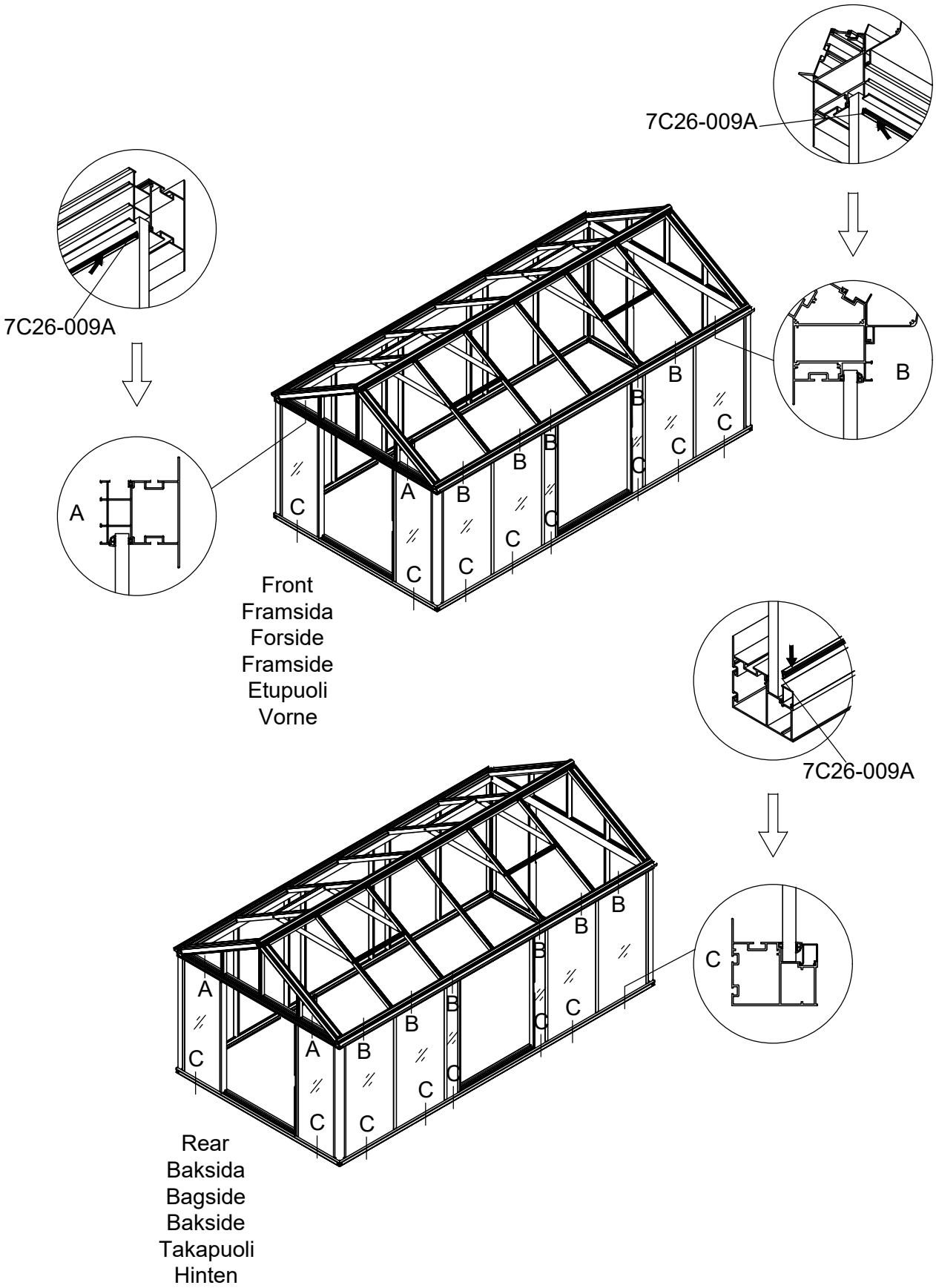

Part	NO.	QTY.	Length(MM)
	J12	12	PCS

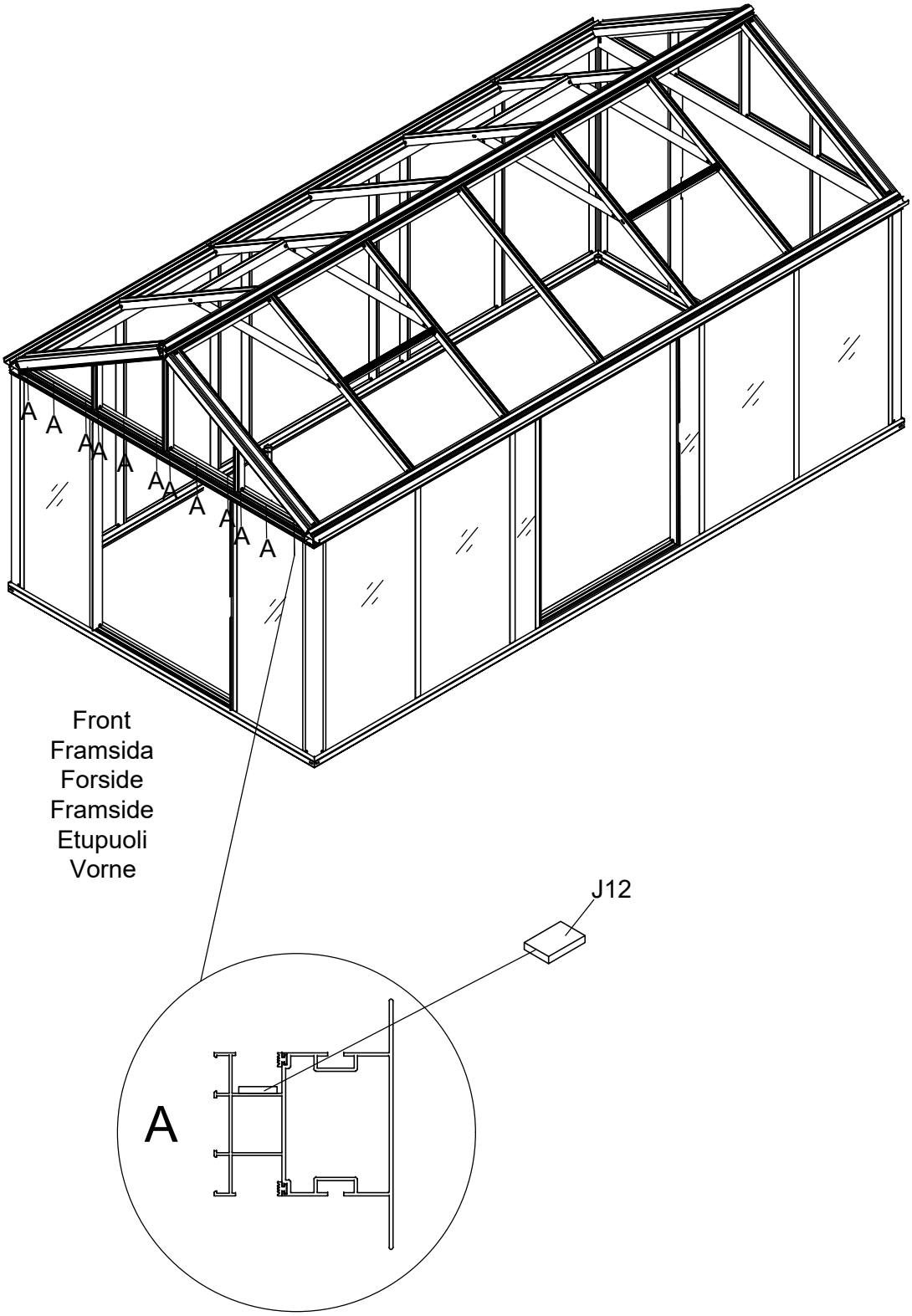

Part	NO.	QTY.	Length(MM)
	694×423	2	423
	730×856	2	856

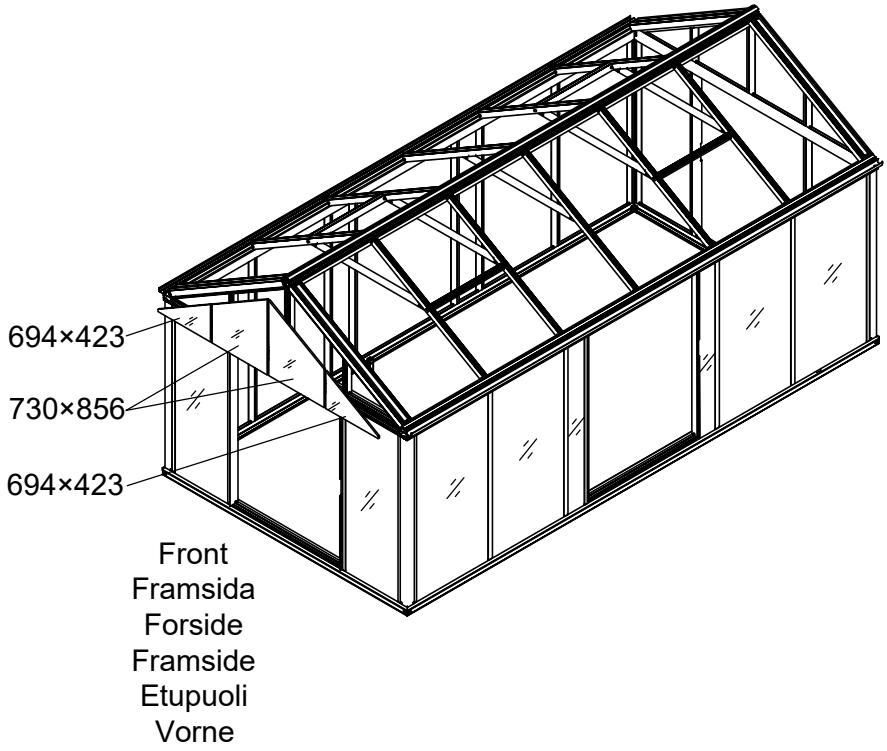

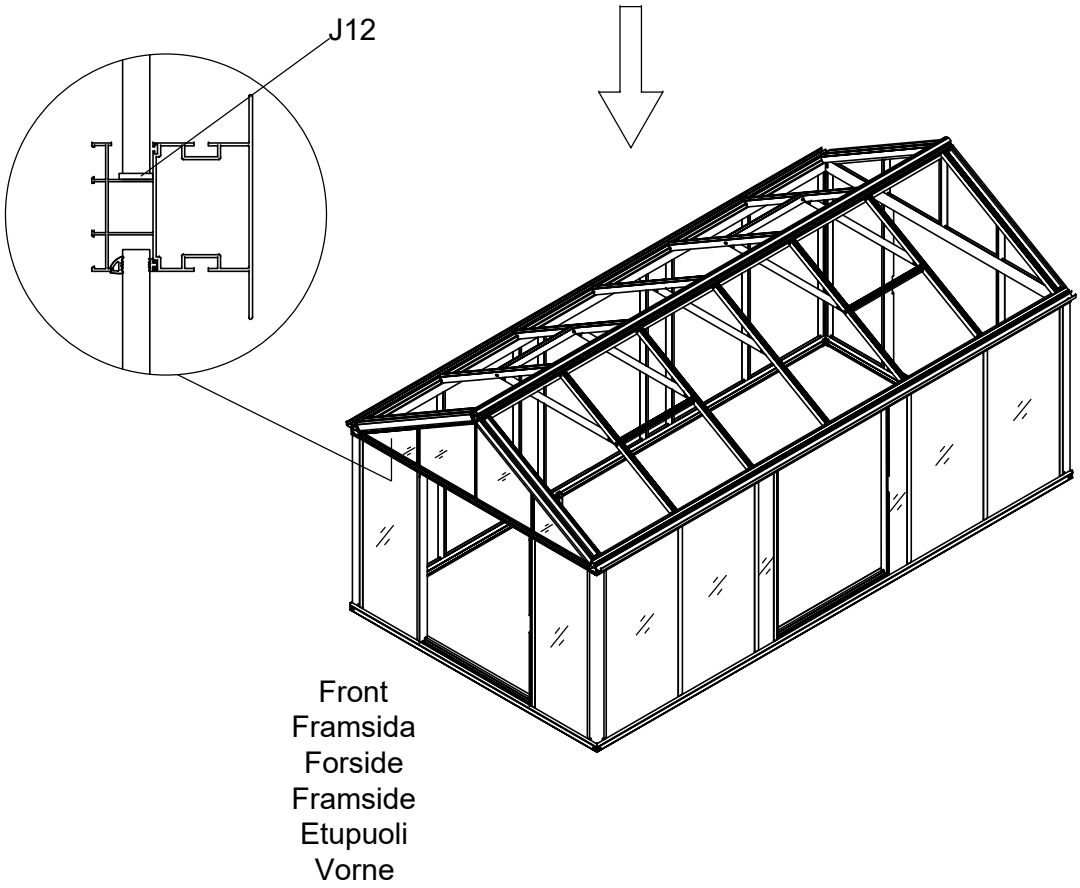

Part	NO.	QTY.	Length(MM)
	41X-Y03	1	857
	41X-Y04R	1	412
	41X-Y04L	1	412
	41X-Y05R	1	1712
	41X-Y05L	1	1712

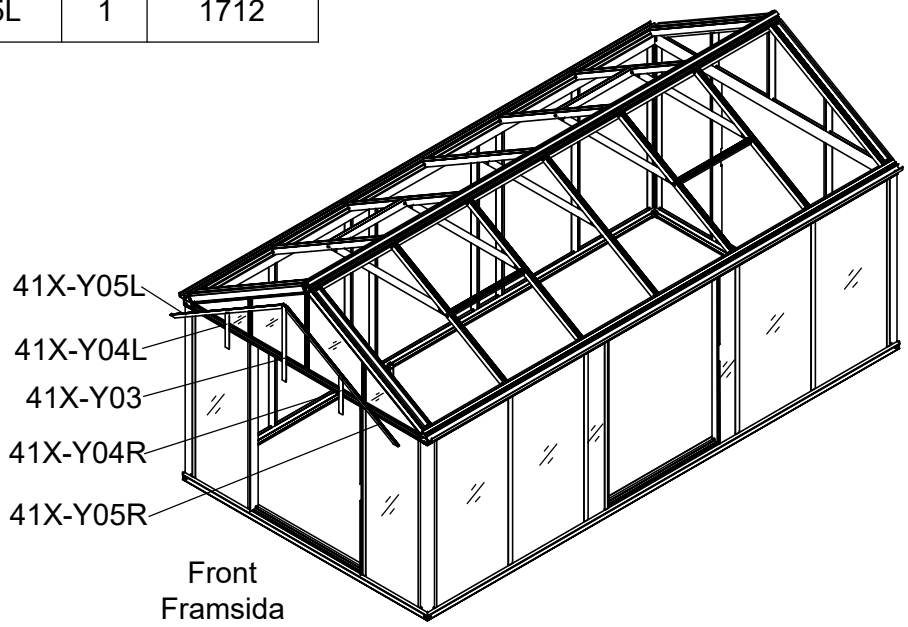

Front
Framsida
Forside
Framside
Etupuoli
Vorne

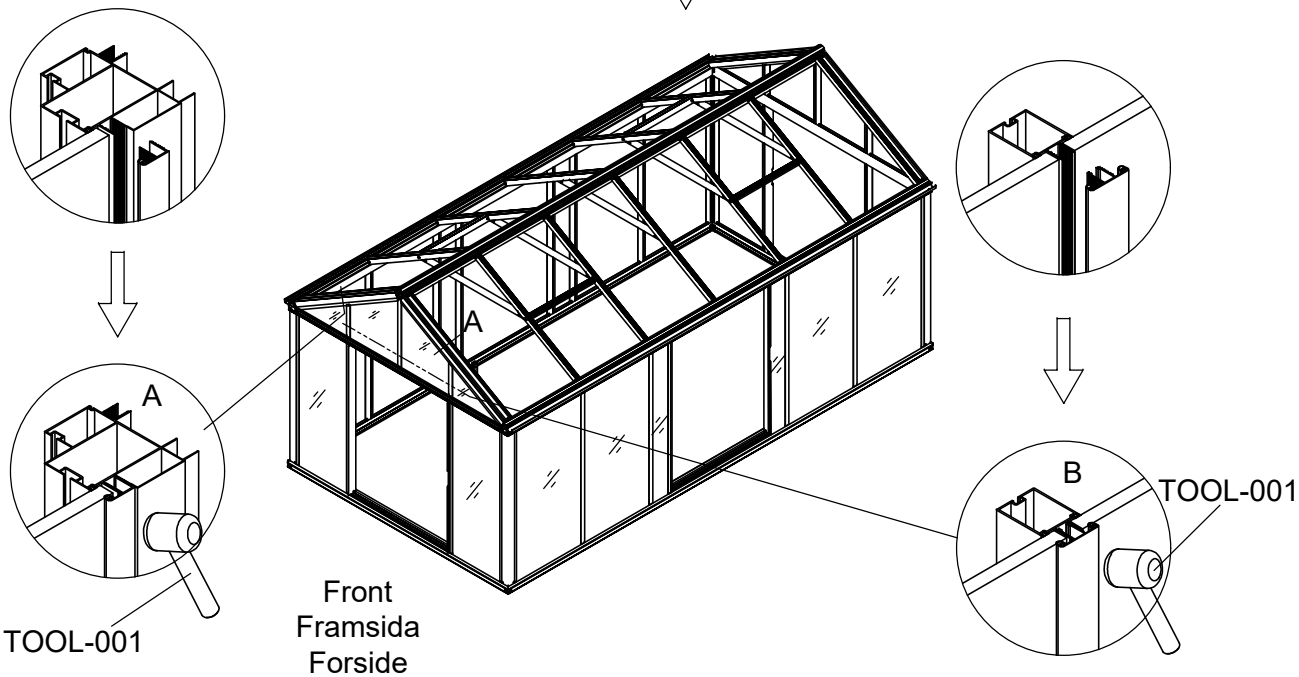

Front
Framsida
Forside
Framside
Etupuoli
Vorne

Part	NO.	QTY.	Length(MM)
	J12	12	PCS

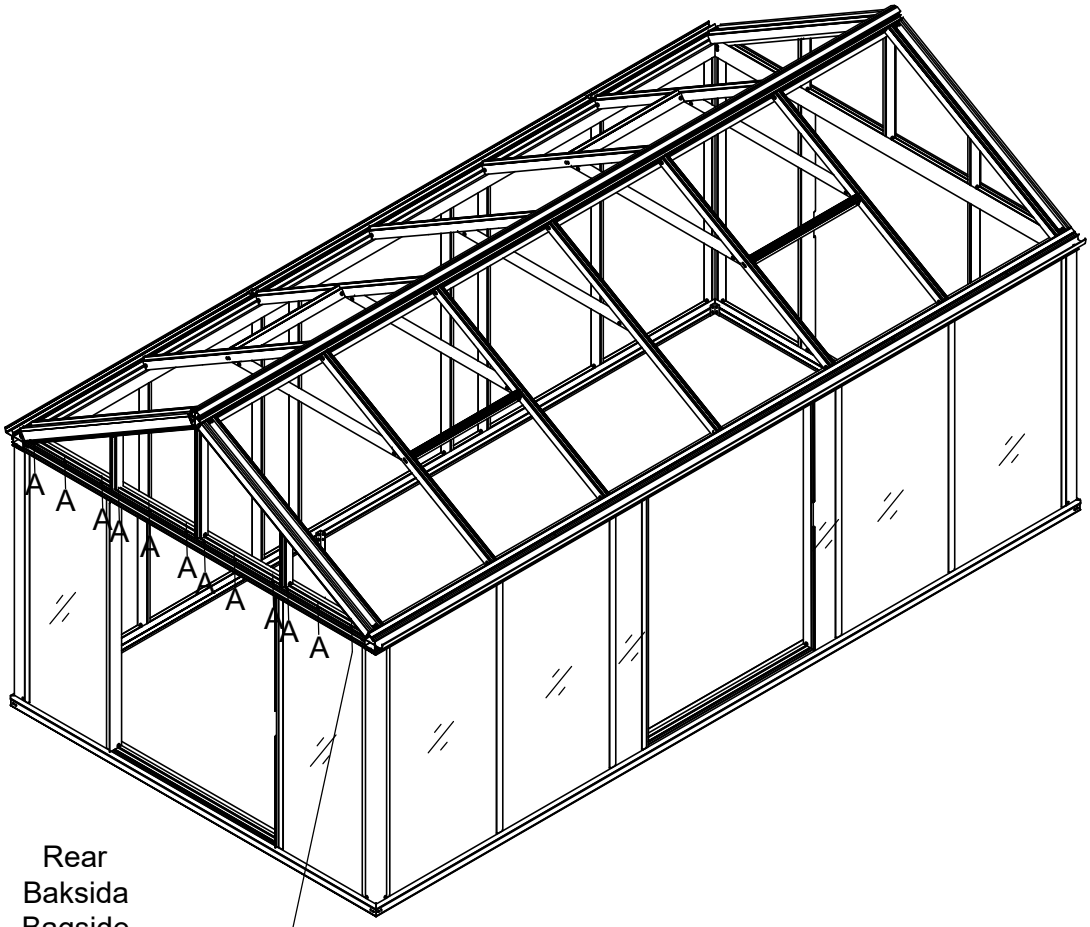

Rear
Baksida
Bagside
Bakside
Takapuoli
Hinten

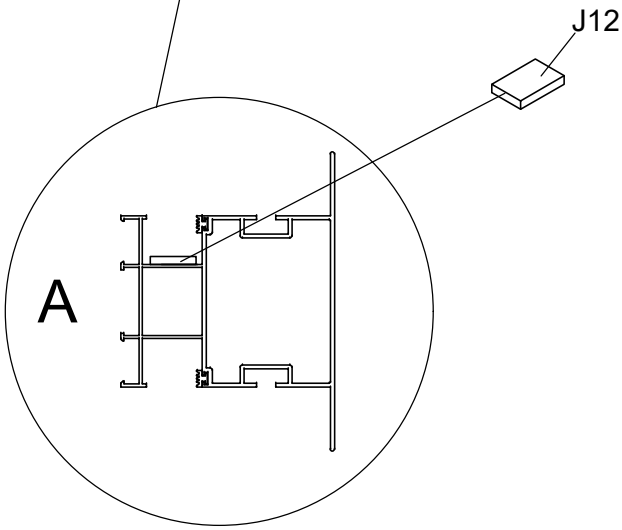

Part	NO.	QTY.	Length(MM)
	694×423	2	423
	730×856	2	856

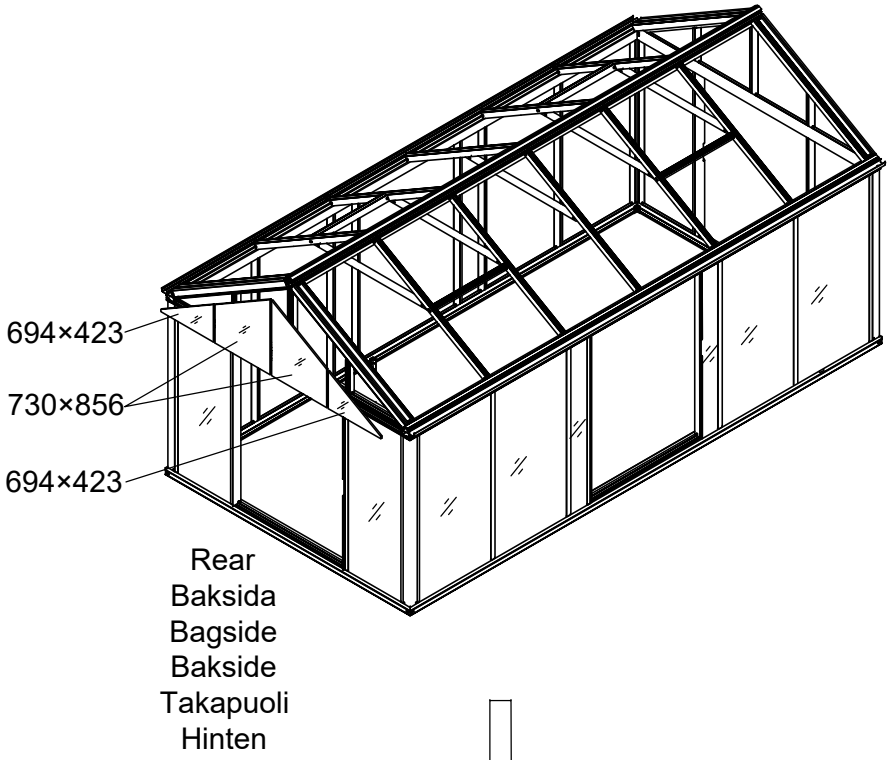

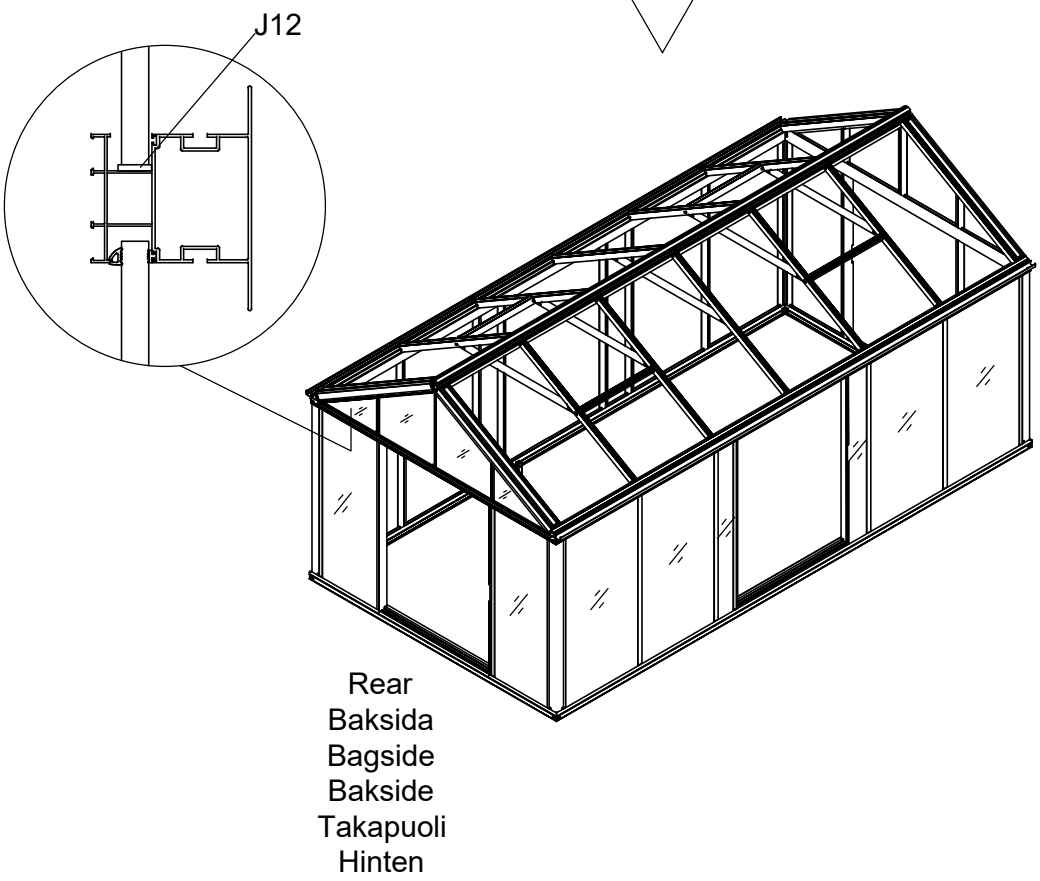

Part	NO.	QTY.	Length(MM)
	41X-Y03	1	857
	41X-Y04R	1	412
	41X-Y04L	1	412
	41X-Y05R	1	1712
	41X-Y05L	1	1712

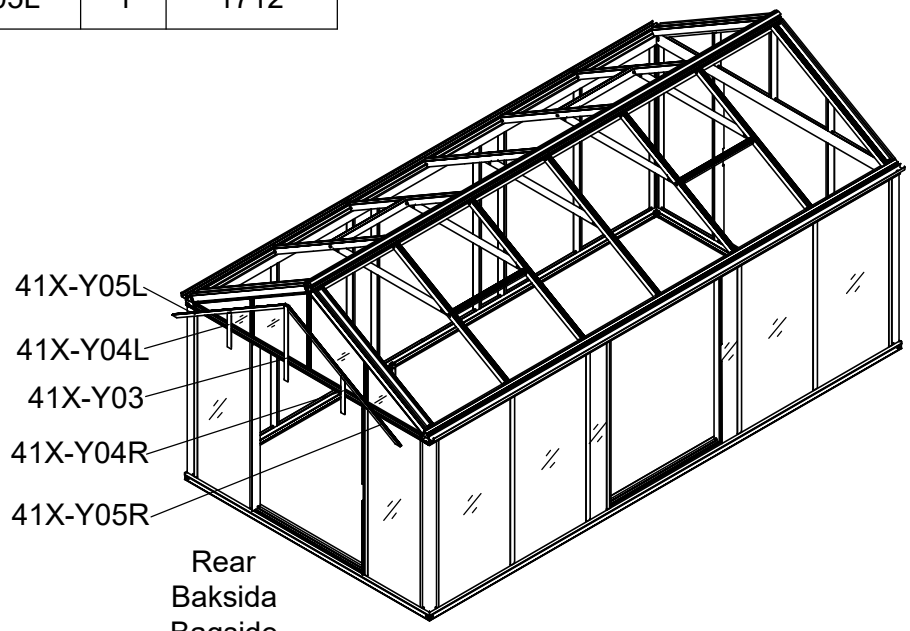

Rear
Baksida
Bagside
Bakside
Takapuoli
Hinten

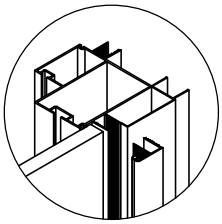

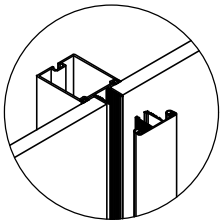

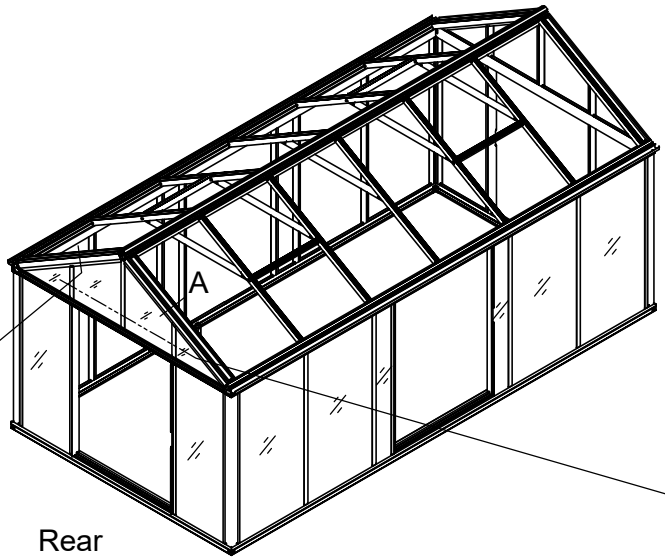

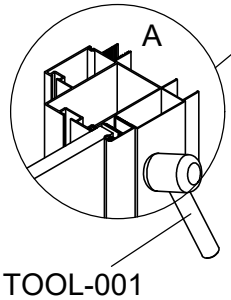

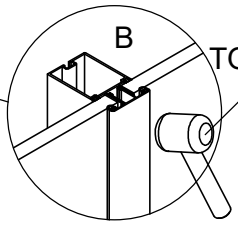

Rear
Baksida
Bagside
Bakside
Takapuoli
Hinten

Part	NO.	QTY.	Length(MM)
	7C26-009A	6M	

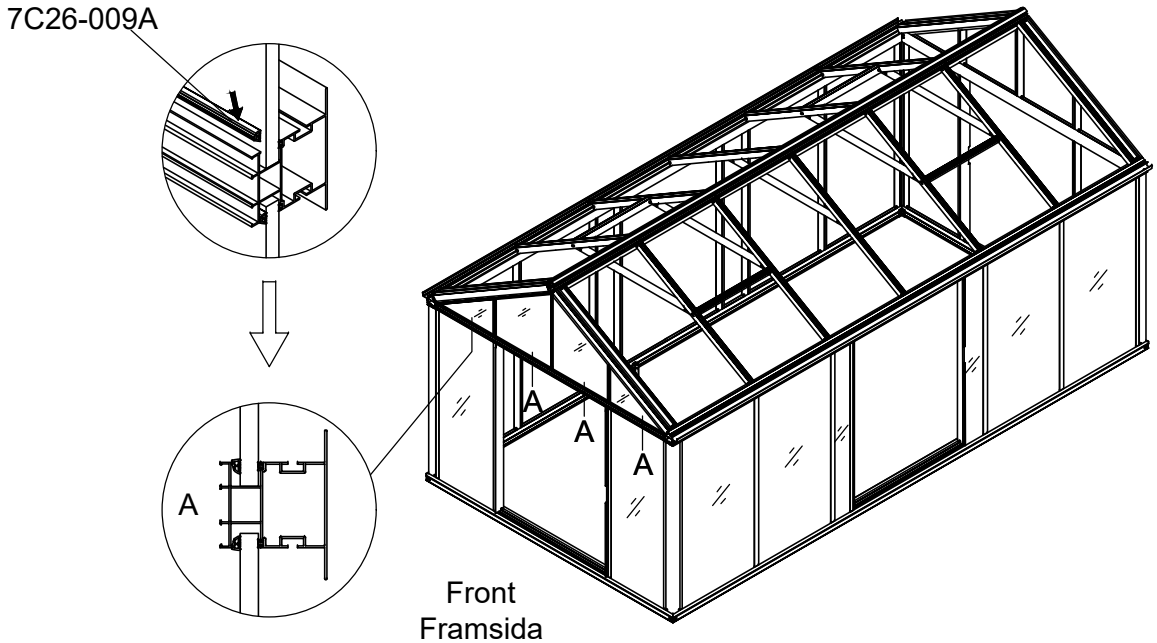

Front
Framsida
Forside
Framside
Etupuoli
Vorne

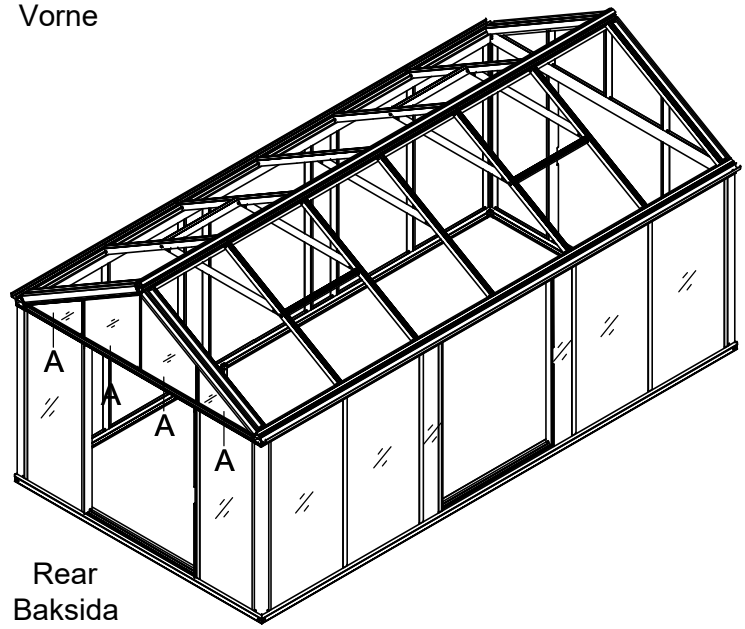

Rear
Baksida
Bagside
Bakside
Takapuoli
Hinten

Part	NO.	QTY.				Length(MM)
		3601	3602	3603	3604	
	J12	18	24	30	36	PCS

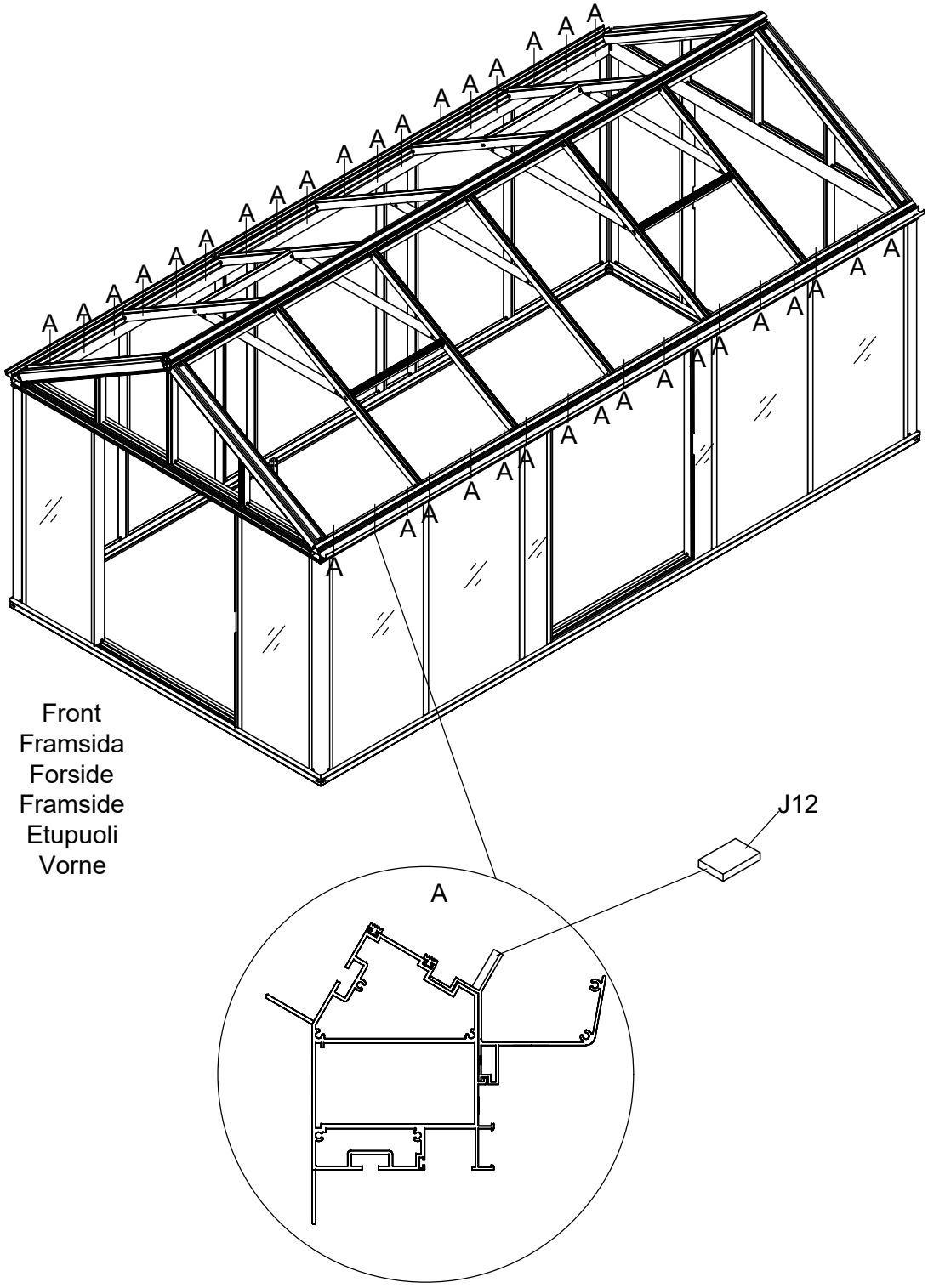

Part	NO.	QTY.				Length(MM)
		3601	3602	3603	3604	
	980×1800	4	6	6	8	1800
	980×909	2	2	4	4	980

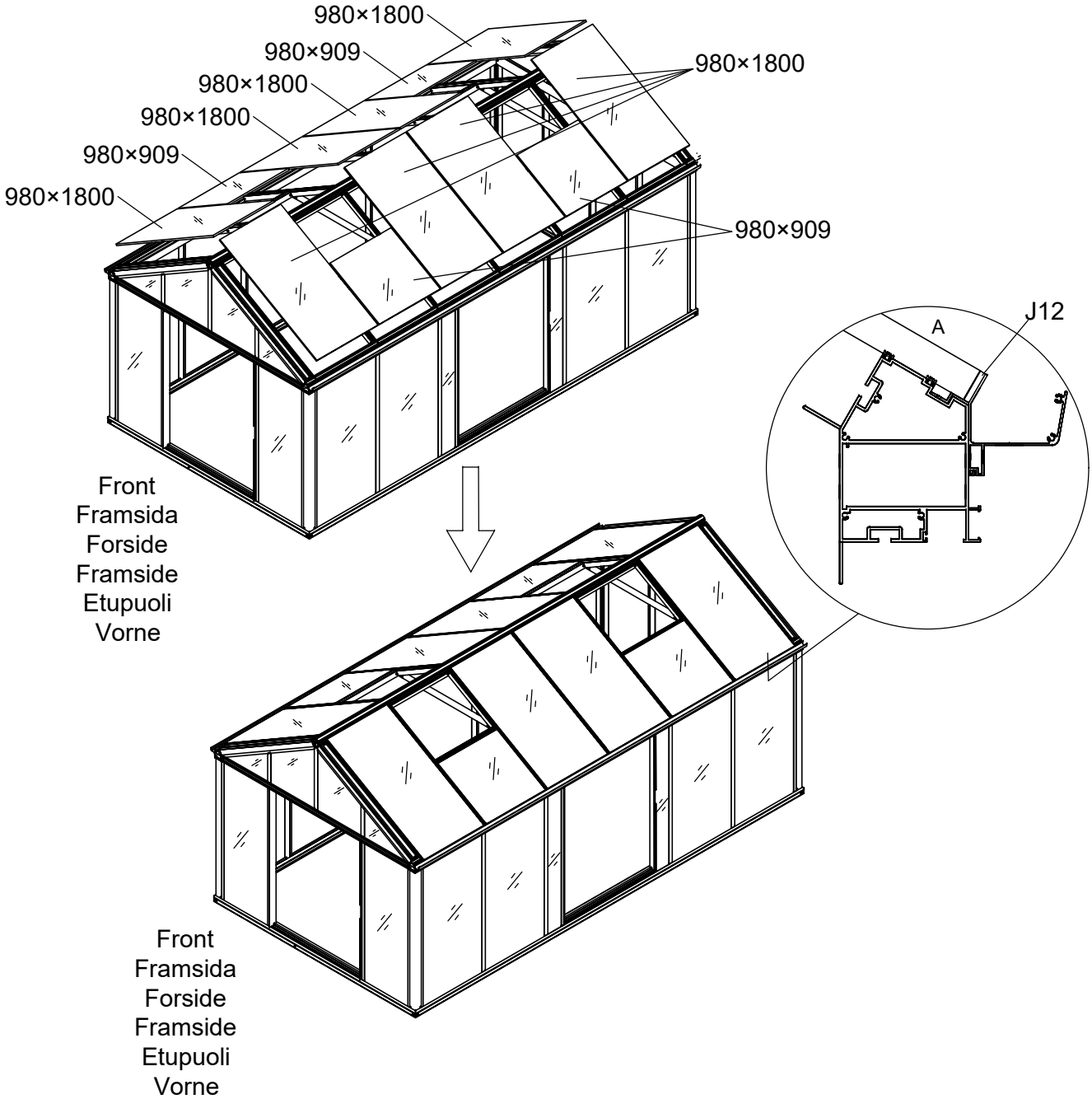

3601	3602	3603	3604
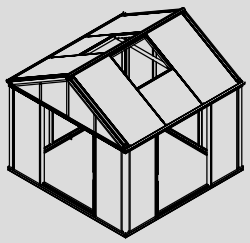	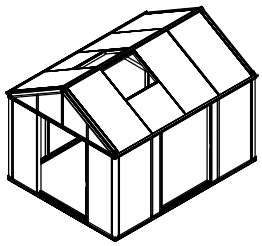	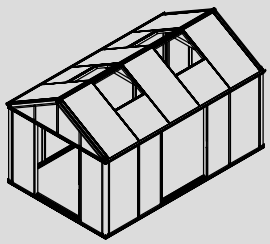	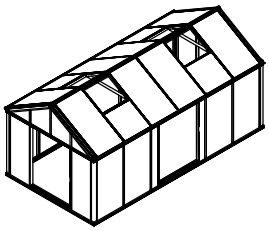

Part	NO.	QTY.				Length(MM)
		3601	3602	3603	3604	
	41X-Y101	6	8	10	12	980

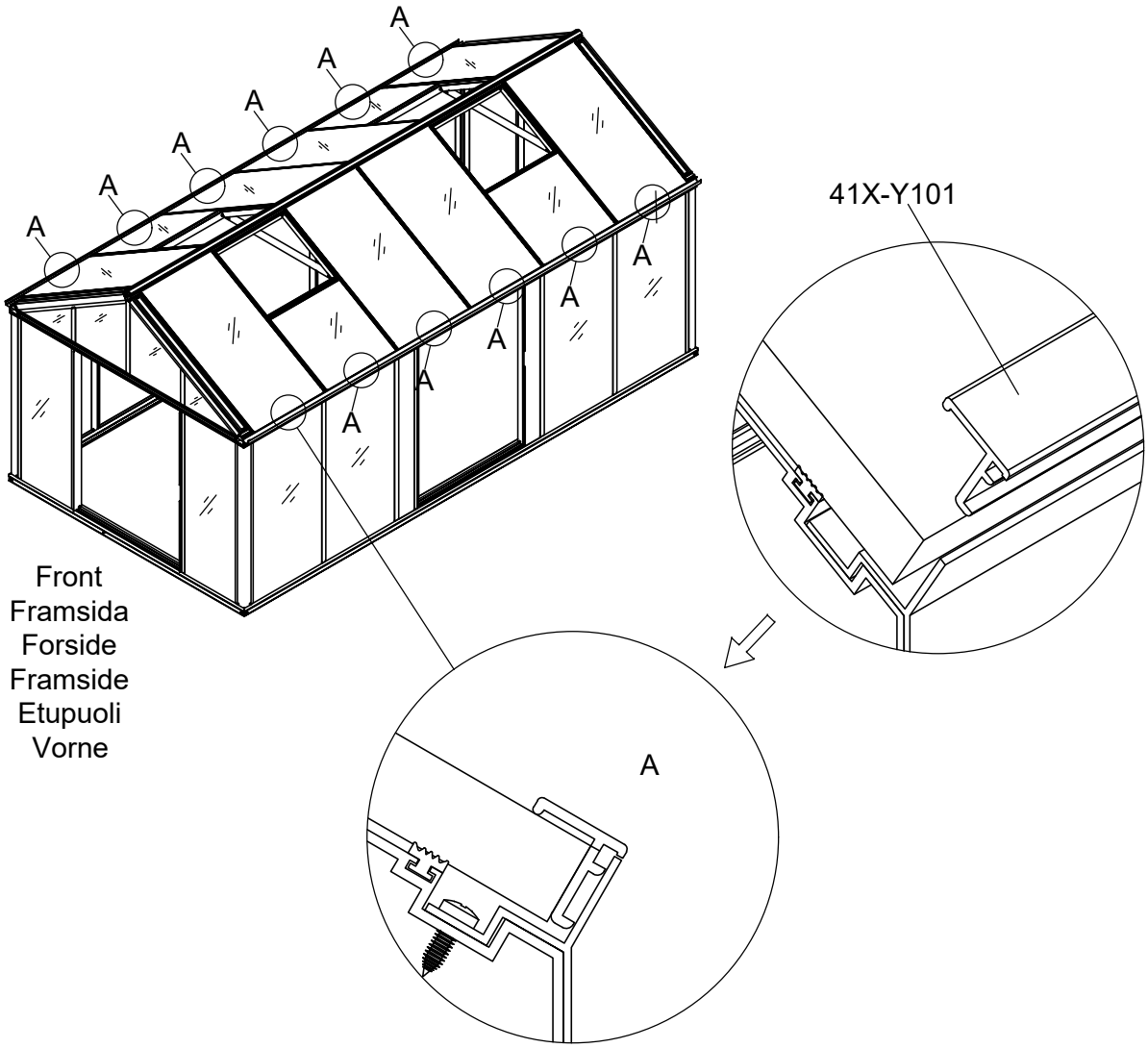

3601	3602	3603	3604
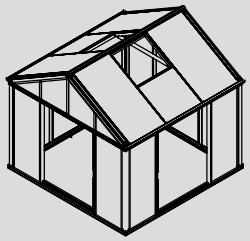	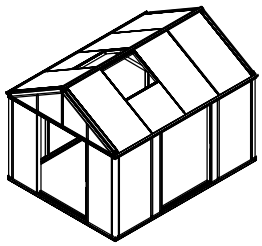	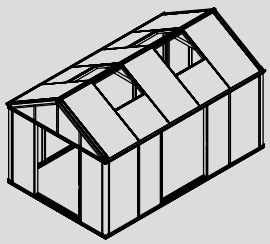	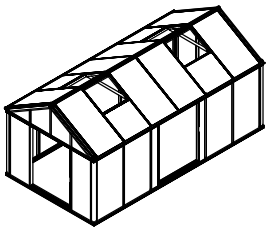

Part	NO.	QTY.				Length(MM)
		3601	3602	3603	3604	
	41X-Y06B	4	4	4	4	1782
	41X-Y06	4	6	8	10	1782
	41X-Y07	2	2	4	4	950
	7B33-017	2	2	2	2	PCS
	7B33-018	2	2	2	2	PCS
	7B33-019	4	6	8	10	PCS

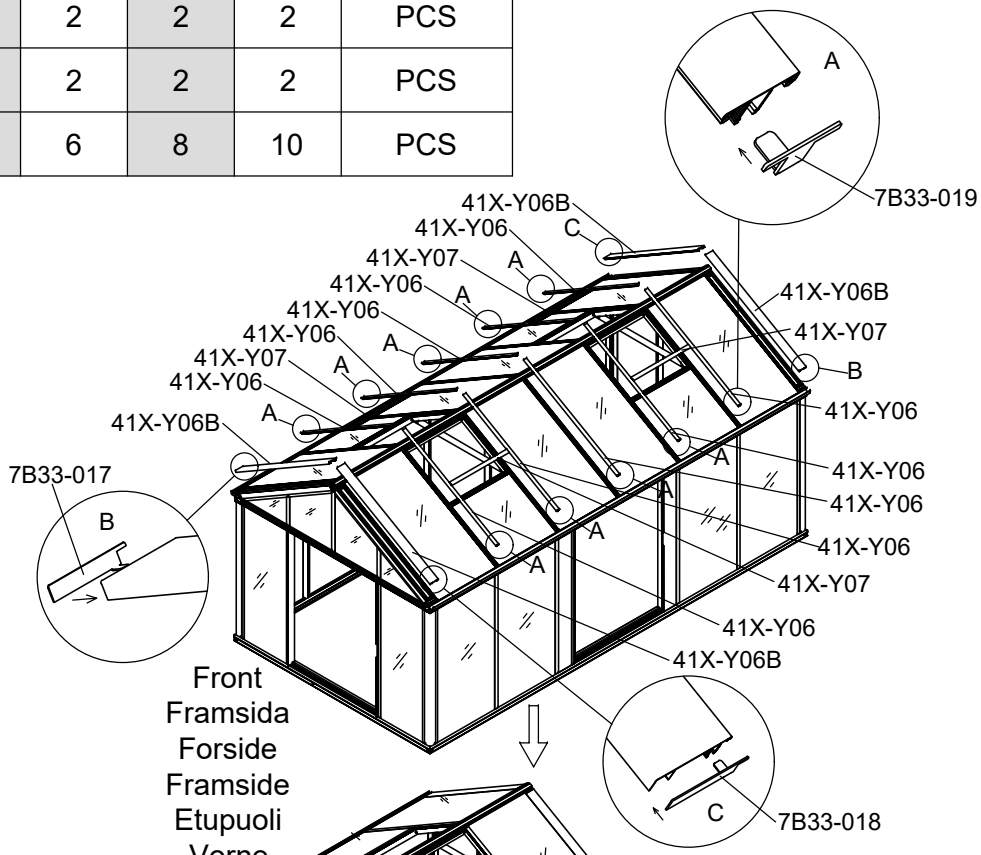

Front
Framsida
Forside
Framside
Etupuoli
Vorne

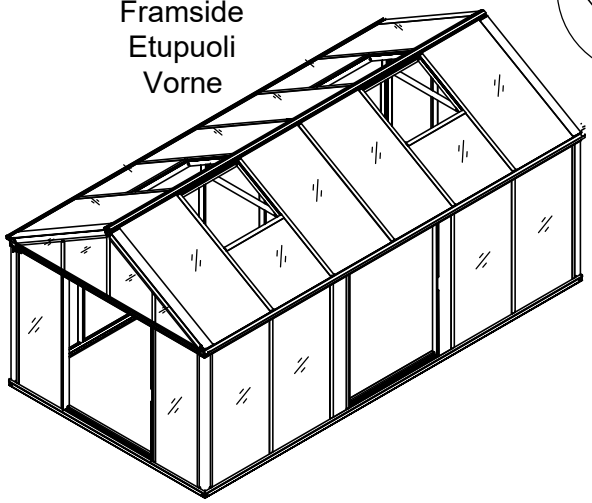

Front
Framsida
Forside
Framside
Etupuoli
Vorne

3601	3602	3603	3604
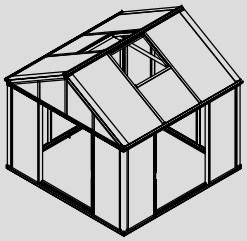	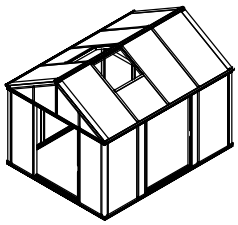	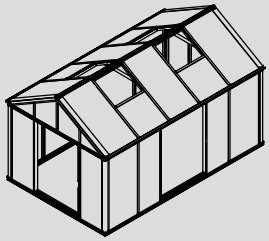	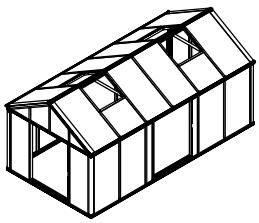

Part	NO.	QTY.				Length (MM)
		3601	3602	3603	3604	
	7C28-004	8	10	12	14	PCS
	Z4.2-50	8	10	12	14	PCS

Part	Product	NO.	Length (MM)	QTY.	Code
	3601	41X-Y63-3A	3207	2	A007
	3602	41X-Y63-4A	4207		
	3603	41X-Y63-5A	5208		
	3604	41X-Y63-6A	6209		

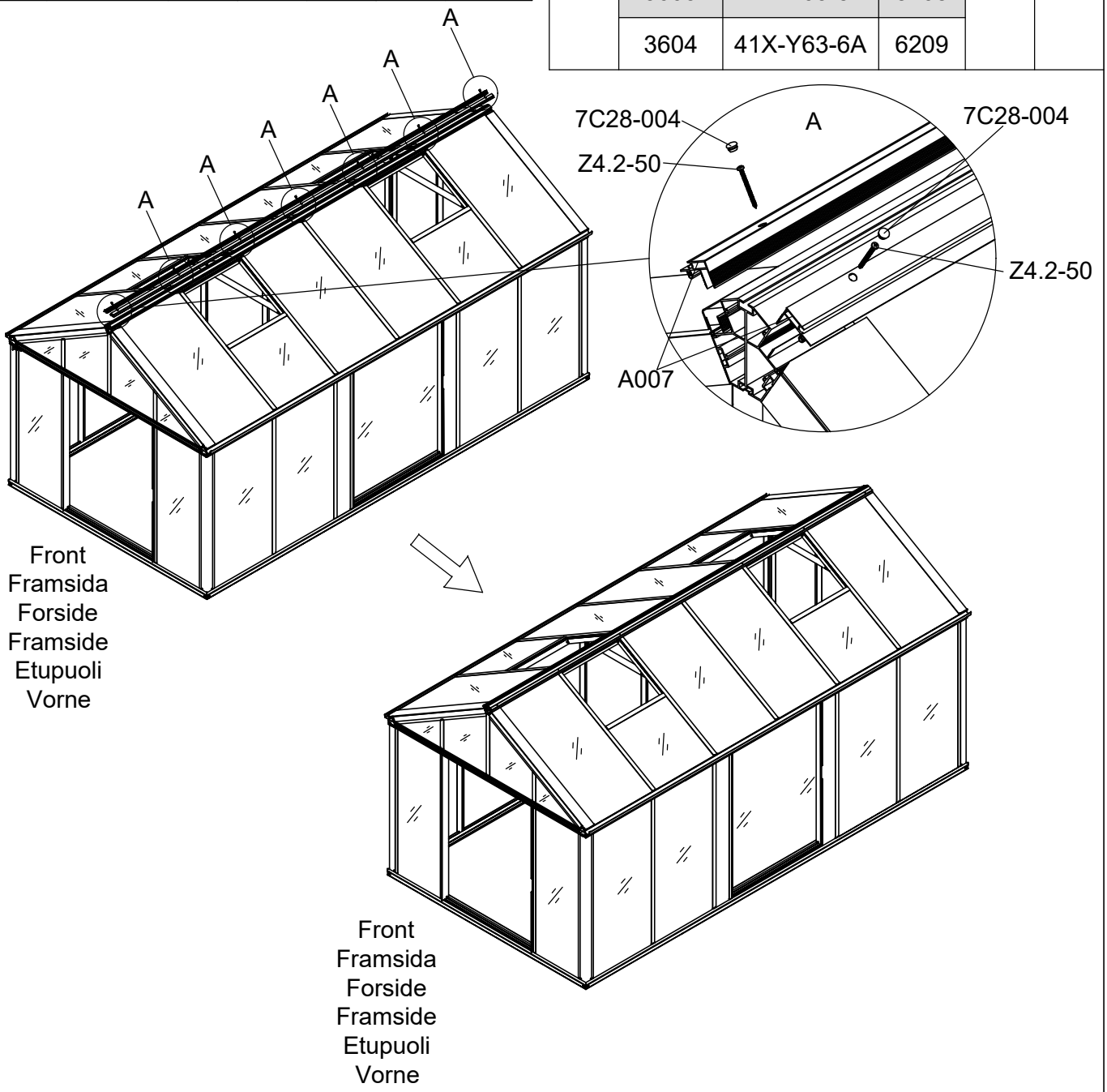

3601	3602	3603	3604
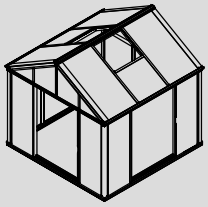	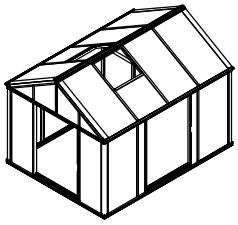	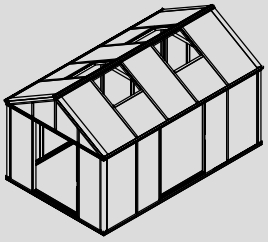	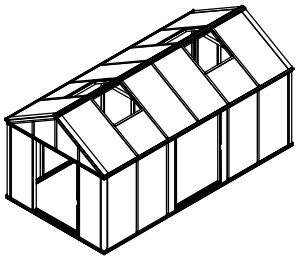

Part	NO.	QTY.	Length(MM)
	664×1808	4	1808
	41X-Y90	1	1922
	41X-Y91R	1	1922
	41X-Y92R	1	776
	41X-Y93	1	776
	W03	4	30
	W04	8	PCS
	J12	3	PCS

Part	NO.	QTY.	Length(MM)	CTN NO.
	41X-Y90	3	1922	3010P-TD
	41X-Y91R	3	1922	3010P-TD
	41X-Y92R	3	776	3010P-TD
	41X-Y93	3	776	3010P-TD
	W03	12	30	3010P-TD
	W04	24	PCS	3010P-TD
	J12	9	PCS	3010P-TD

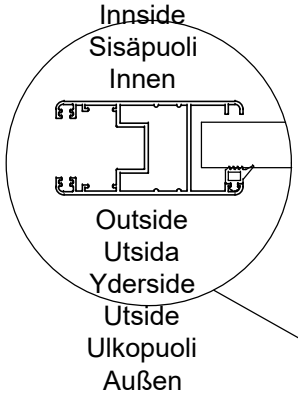

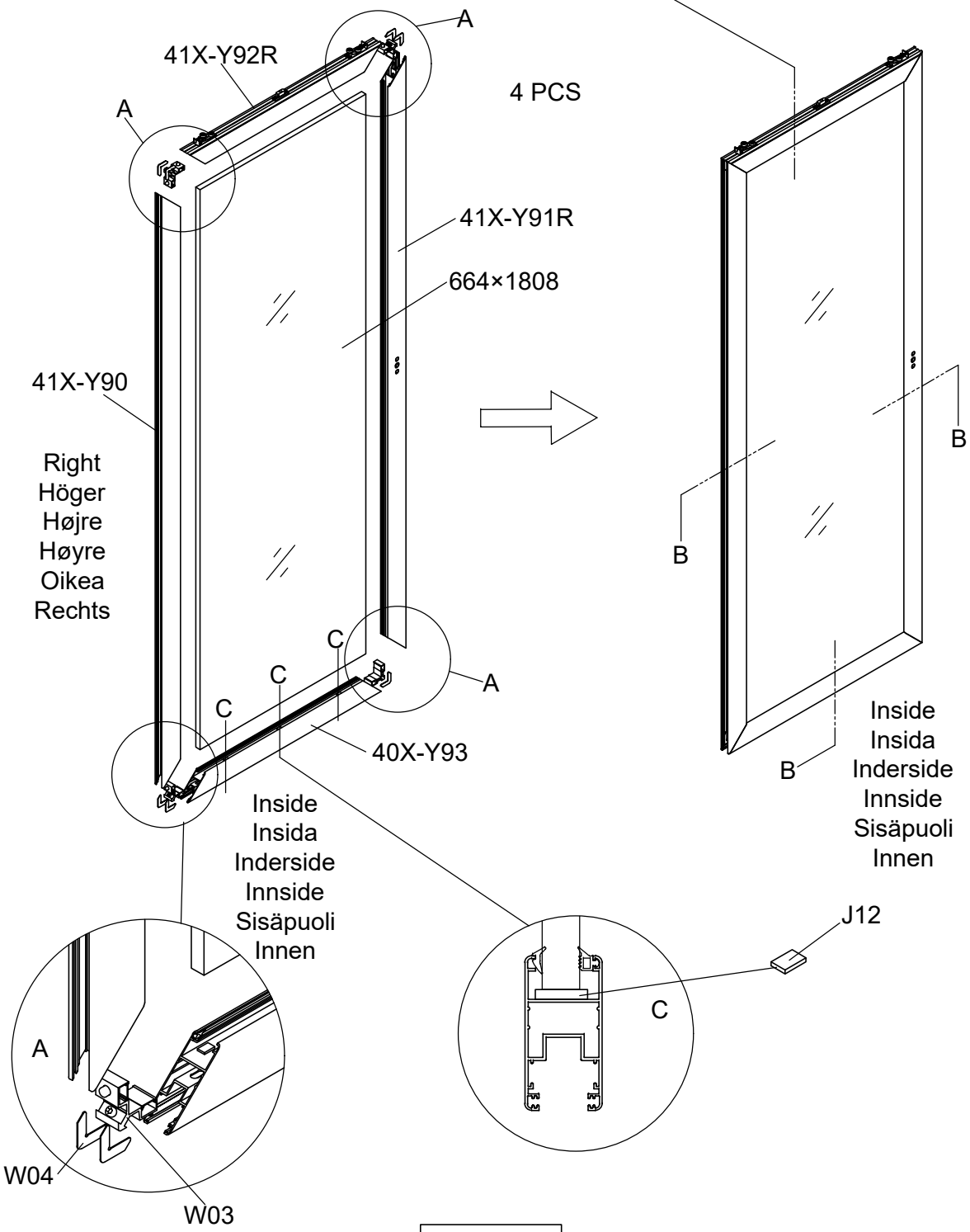

Part	NO.	QTY.	Length(MM)
	664×1808	4	1808
	41X-Y90	1	1922
	41X-Y91L	1	1922
	41X-Y92L	1	776
	41X-Y93	1	776
	W03	4	30
	W04	8	PCS
	J12	3	PCS

Part	NO.	QTY.	Length(MM)	CTN NO.
	41X-Y90	3	1922	3010P-TD
	41X-Y91L	3	1922	3010P-TD
	41X-Y92L	3	776	3010P-TD
	41X-Y93	3	776	3010P-TD
	W03	12	30	3010P-TD
	W04	24	PCS	3010P-TD
	J12	9	PCS	3010P-TD

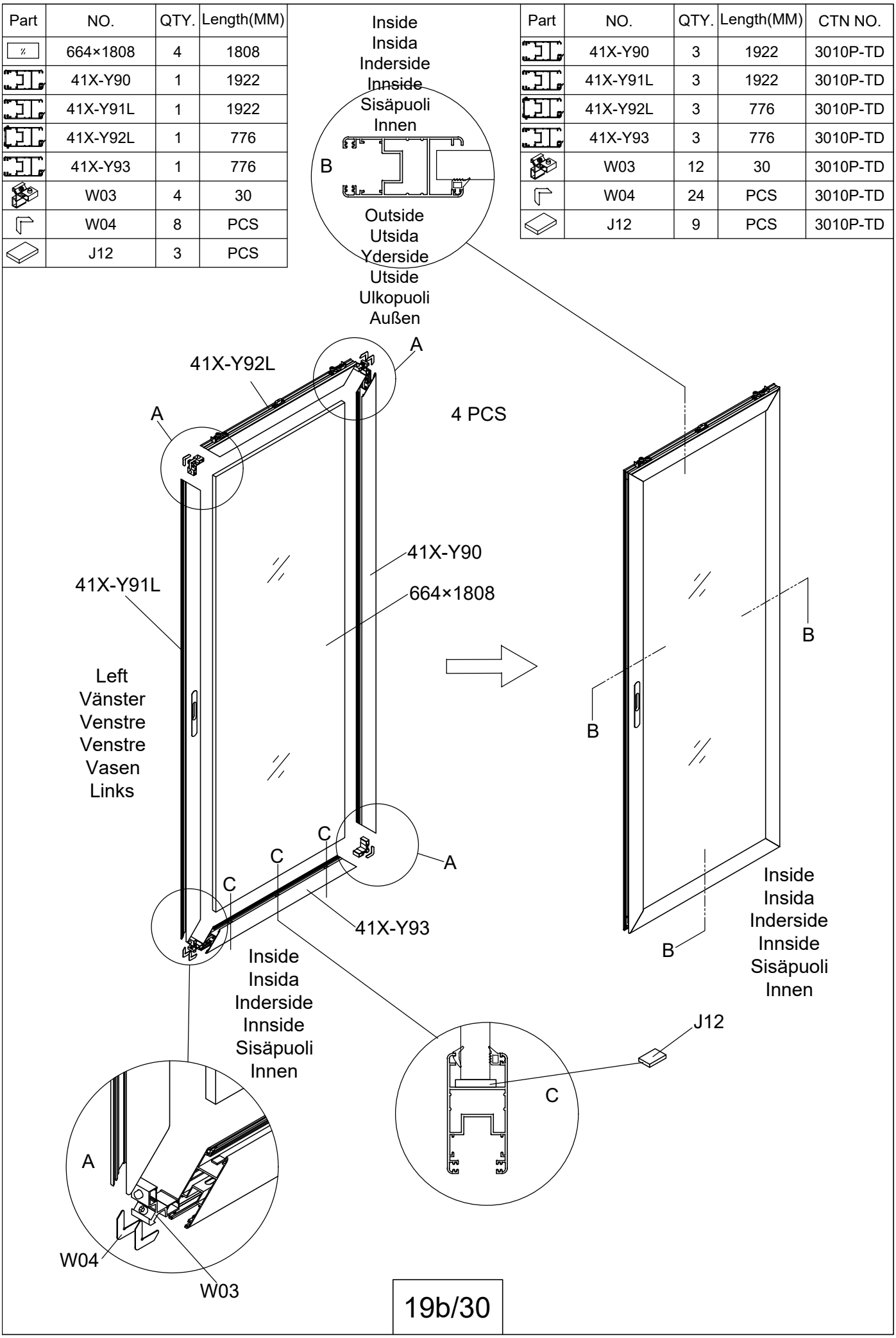

Part	NO.	QTY.	Length(MM)
	MCJT002	12M	

Part	NO.	QTY.	Length(MM)	CTN NO.
	MCJT002	36M		3010P-TD

4 PCS

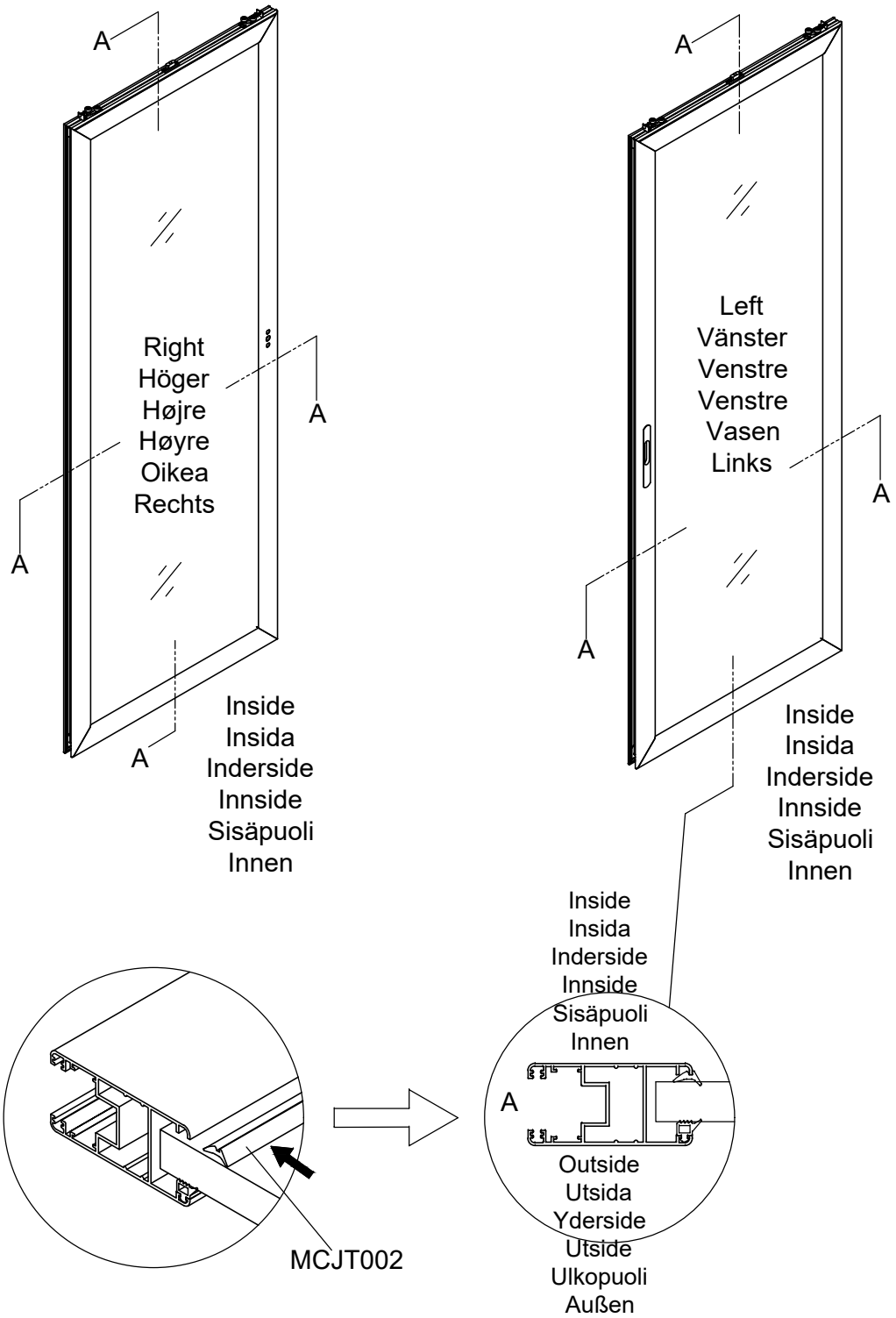

Part	NO.	QTY.	Length(MM)
	41X-Y97-R	1	1915
	41X-Y97-B	1	1882
	41X-Y97-A	1	1882
	Z4.2-13	5	PCS

Part	NO.	QTY.	Length(MM)	CTN NO.
	41X-Y97-R	3	1915	3010P-TD
	41X-Y97-B	3	1882	3010P-TD
	41X-Y97-A	3	1882	3010P-TD
	Z4.2-13	15	PCS	3010P-TD

4 PCS

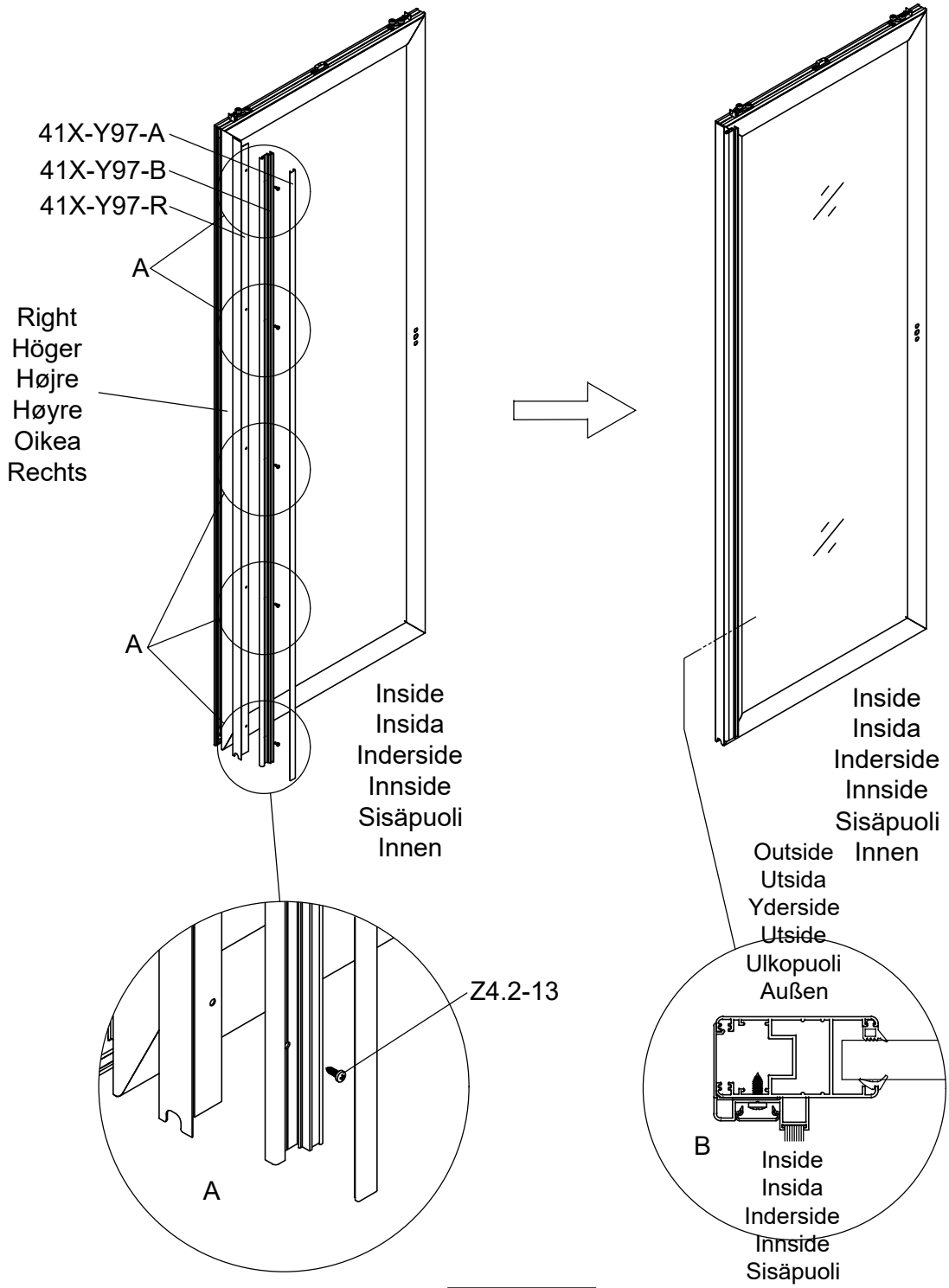

Part	NO.	QTY.	Length(MM)
	41X-Y97-L	1	1915
	41X-Y97-B	1	1882
	41X-Y97-A	1	1882
	Z4.2-13	5	PCS

Part	NO.	QTY.	Length(MM)	CTN NO.
	41X-Y97-L	3	1915	3010P-TD
	41X-Y97-B	3	1882	3010P-TD
	41X-Y97-A	3	1882	3010P-TD
	Z4.2-13	15	PCS	3010P-TD

4 PCS

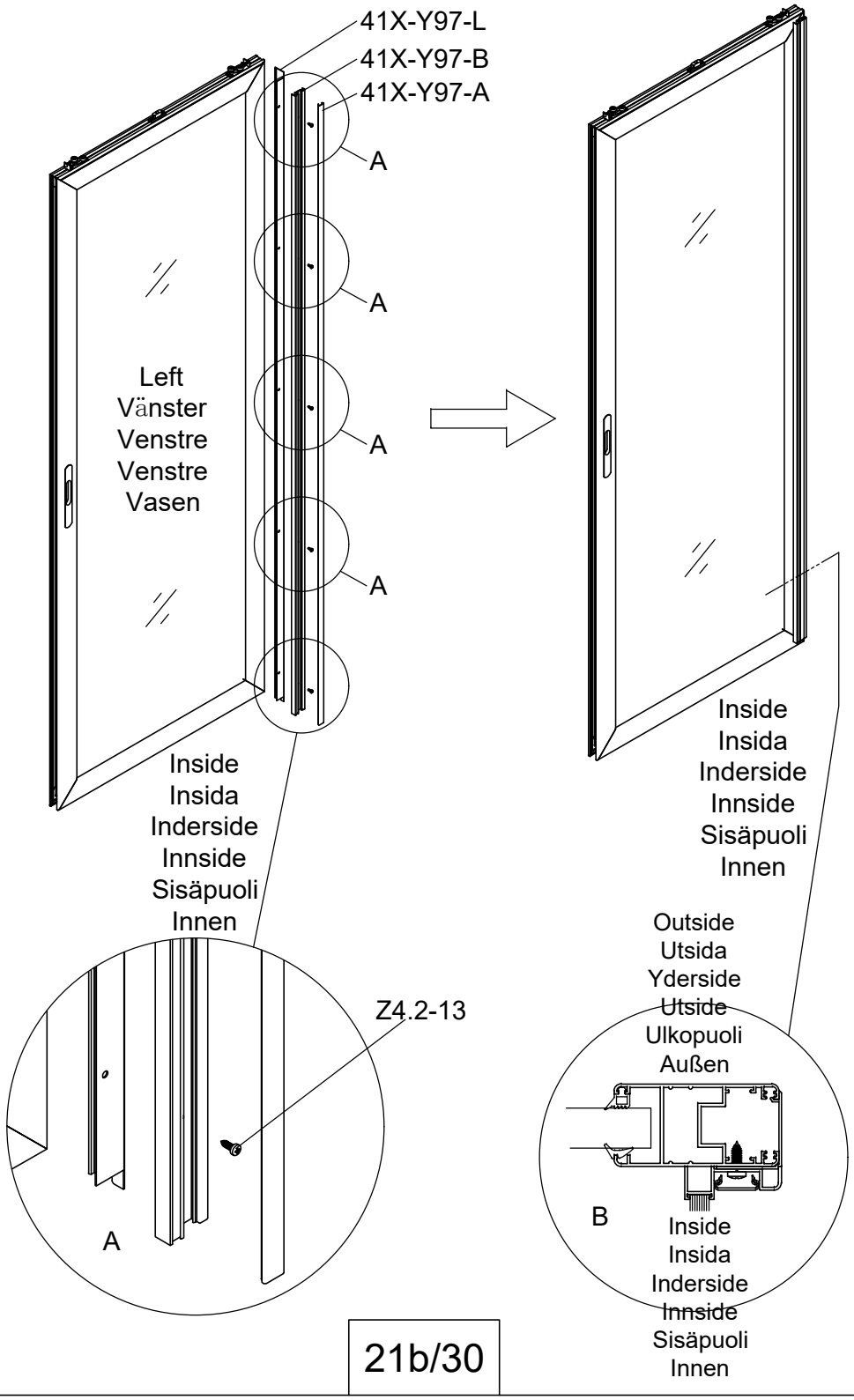

Part	NO.	QTY.	Length(MM)
	41X-Y94	1	1910
	NSST120	2.0M	
	T04	2	PCS
	Z4.2-38	4	PCS
	Z3.5-25	4	PCS

Part	NO.	QTY.	Length(MM)	CTN NO.
	41X-Y94	3	1910	3010P-TD
	NSST120	6.0M		3010P-TD
	T04	6	PCS	3010P-TD
	Z4.2-38	12	PCS	3010P-TD
	Z3.5-25	12	PCS	3010P-TD

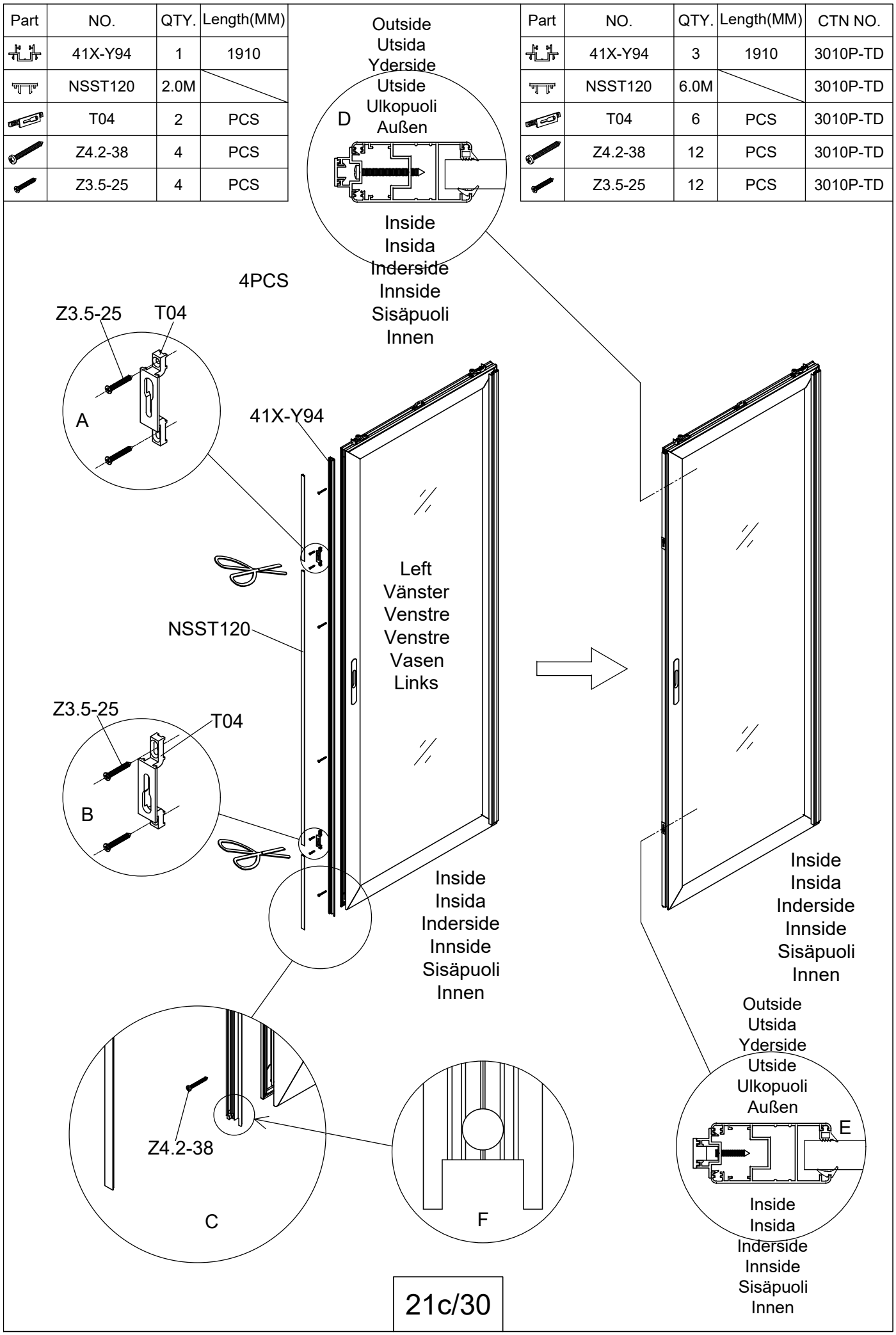

Part	NO.	QTY.	Length(MM)
	41X-Y64	1	3016
	41X-Y17	1	3120
	7C28-004	11	PCS
	Z4.2-50	5	PCS
	Z4.2-13	6	PCS

Part	NO.	QTY.	Length(MM)	CTN NO.
	41X-Y64	1	3016	3010P-TD
	41X-Y17	1	3120	3010P-TD
	7C28-004	11	PCS	3010P-TD
	Z4.2-50	5	PCS	3010P-TD
	Z4.2-13	6	PCS	3010P-TD

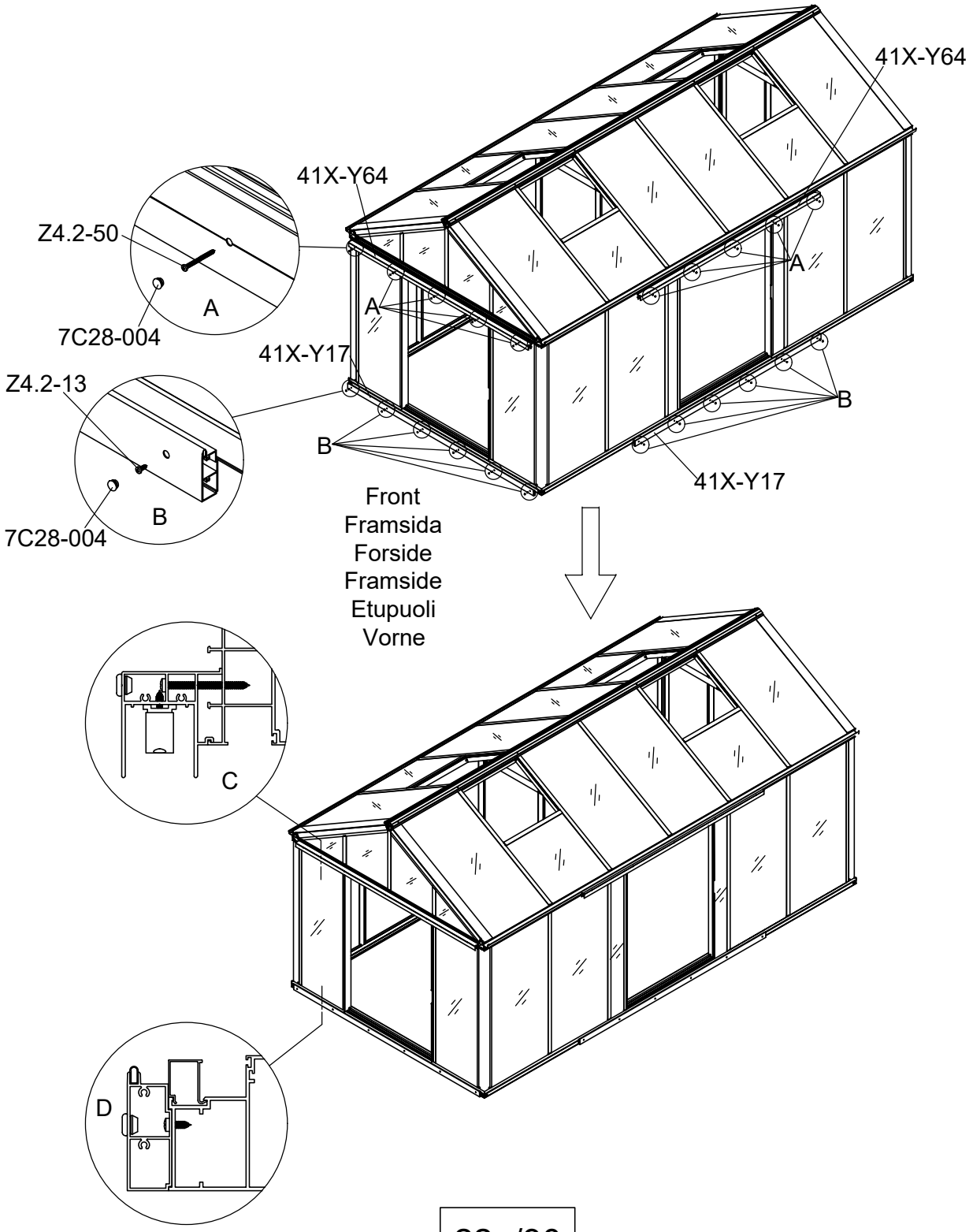

Part	NO.	QTY.	Length(MM)	CTN NO.
	41X-Y64	2	3016	3010P-TD
	41X-Y17	2	3120	3010P-TD
	7C28-004	22	PCS	3010P-TD
	Z4.2-50	10	PCS	3010P-TD
	Z4.2-13	12	PCS	3010P-TD

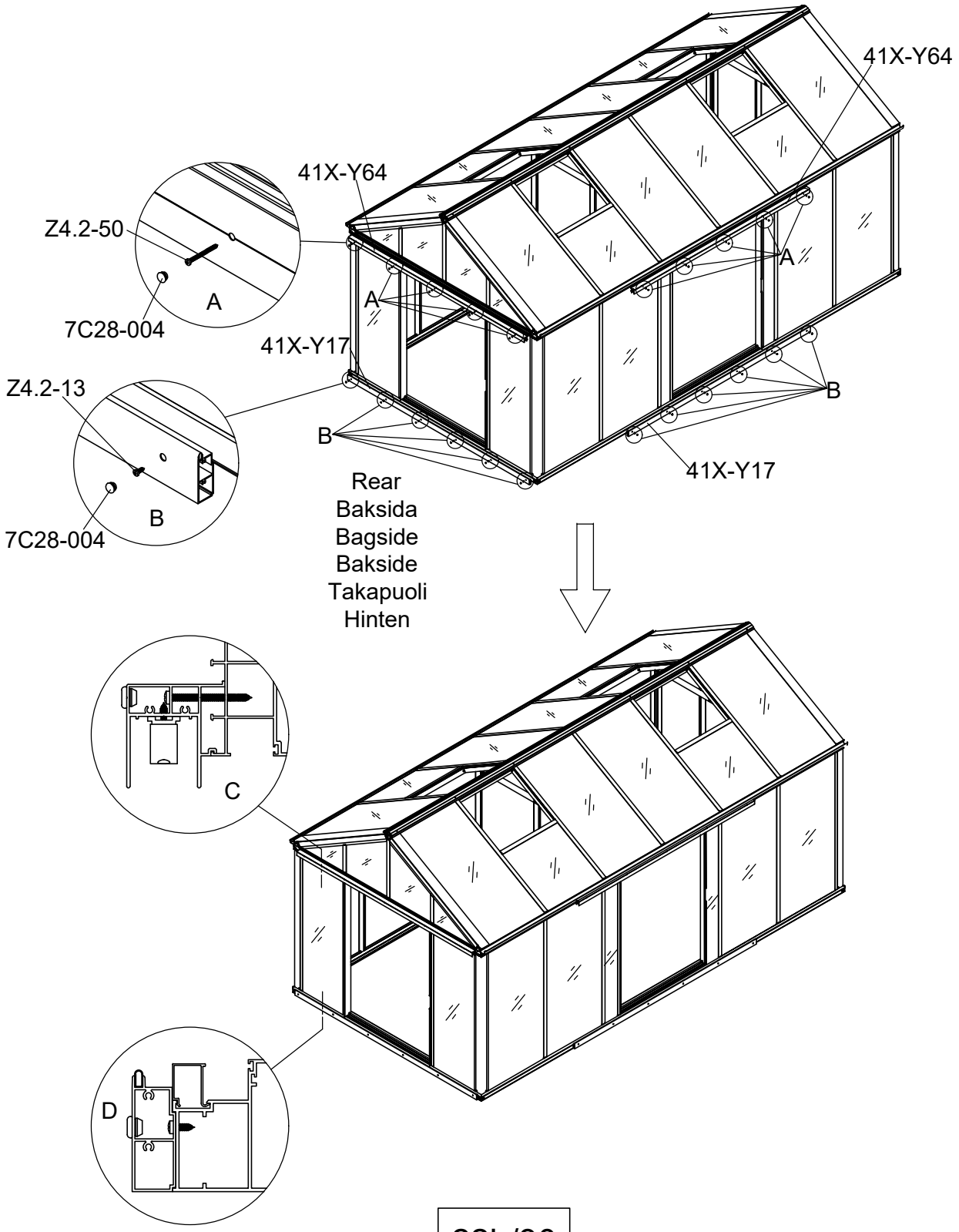

Part	NO.	QTY.	Length(MM)
	41X-Y100	1	1451

Part	NO.	QTY.	Length(MM)	CTN NO.
	41X-Y100	1	1451	3010P-TD

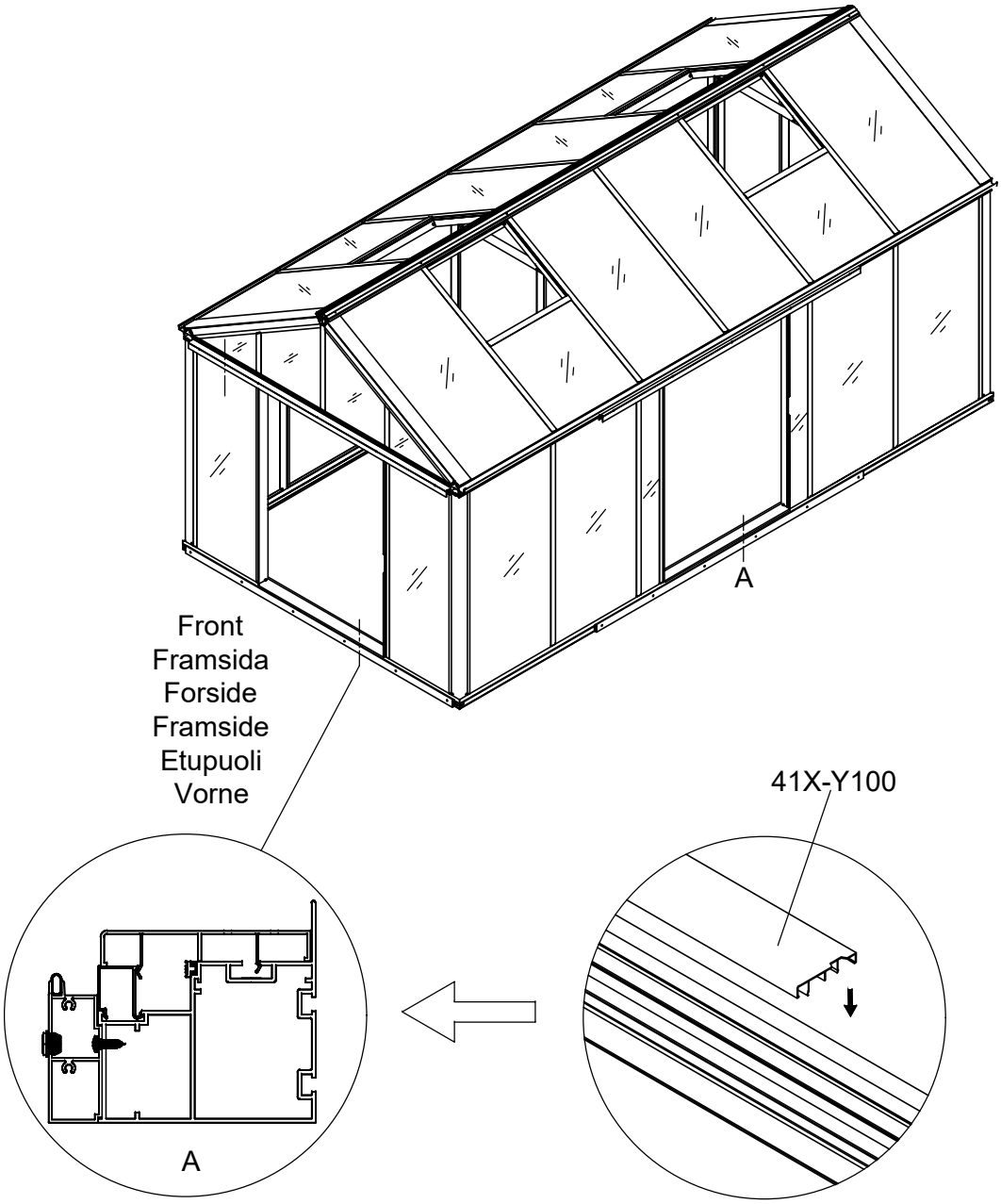

Part	NO.	QTY.	Length(MM)	CTN NO.
	41X-Y100	2	1451	3010P-TD

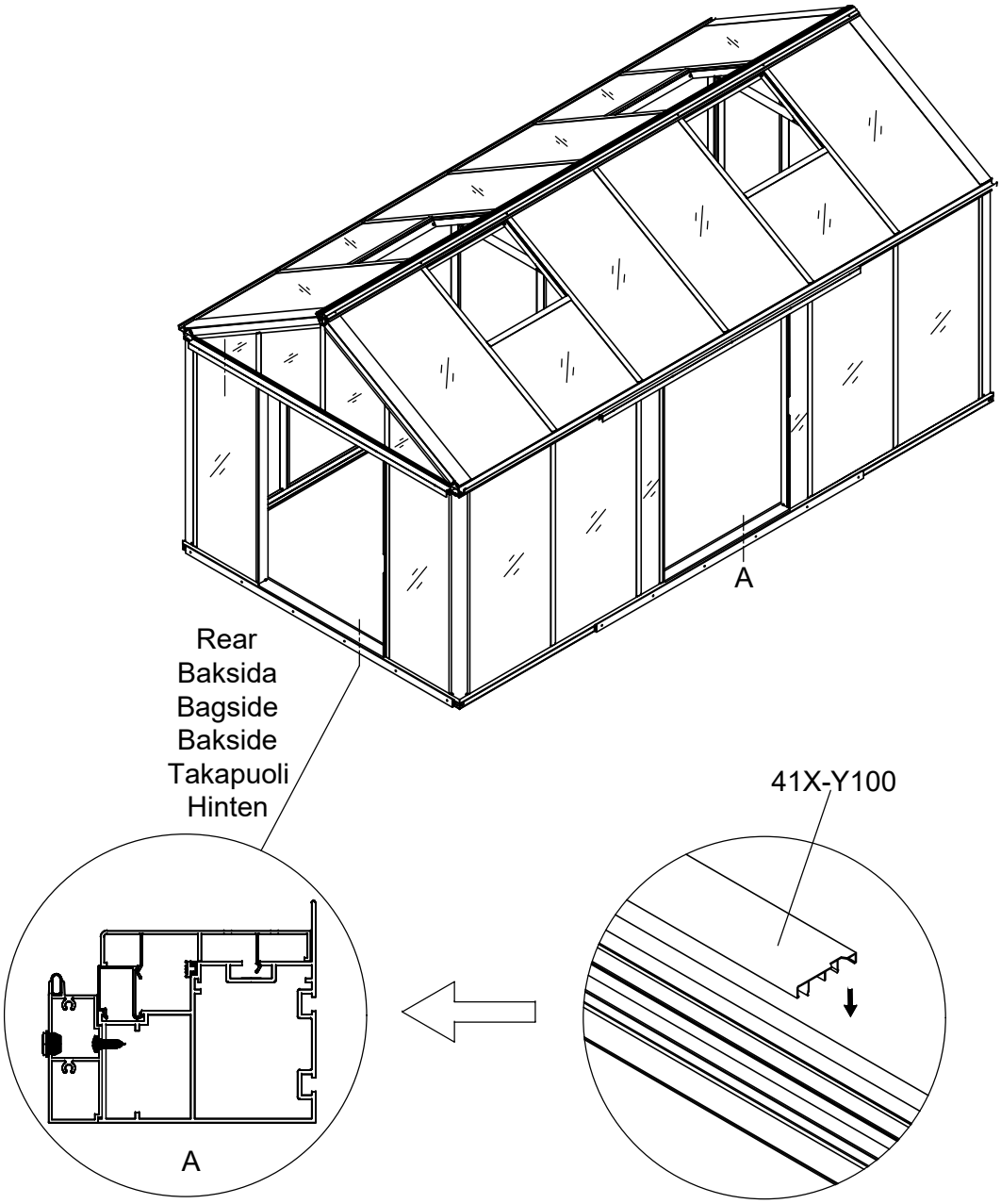

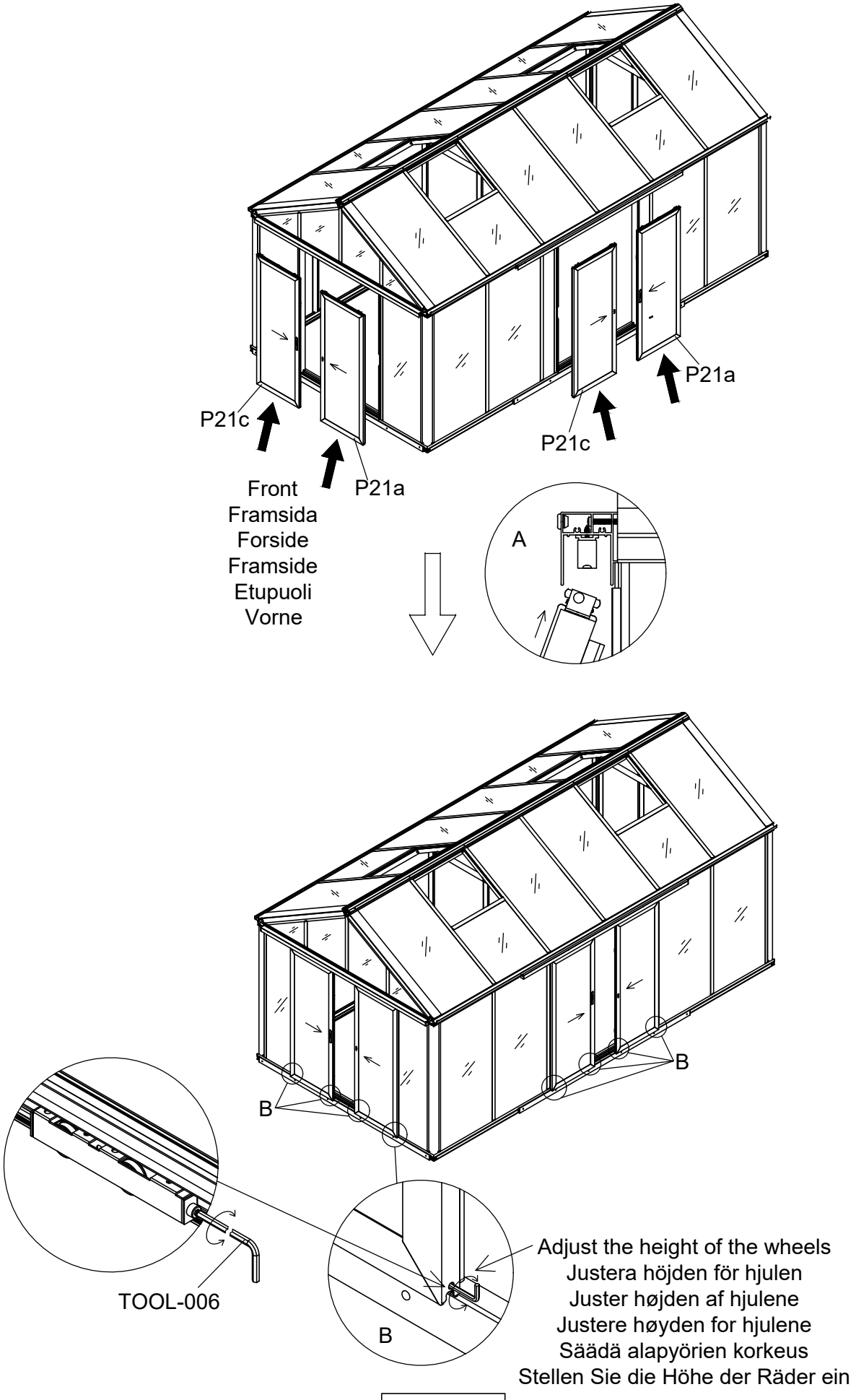
P21c
P21a
P21c
P21a
Front
Framsida
Forside
Framside
Etupuoli
Vorne
A
B
B
TOOL-006
B
Adjust the height of the wheels
Justera höjden för hjulen
Juster højden af hjulene
Justere høyden for hjulene
Säädä alapyörien korkeus
Stellen Sie die Höhe der Räder ein

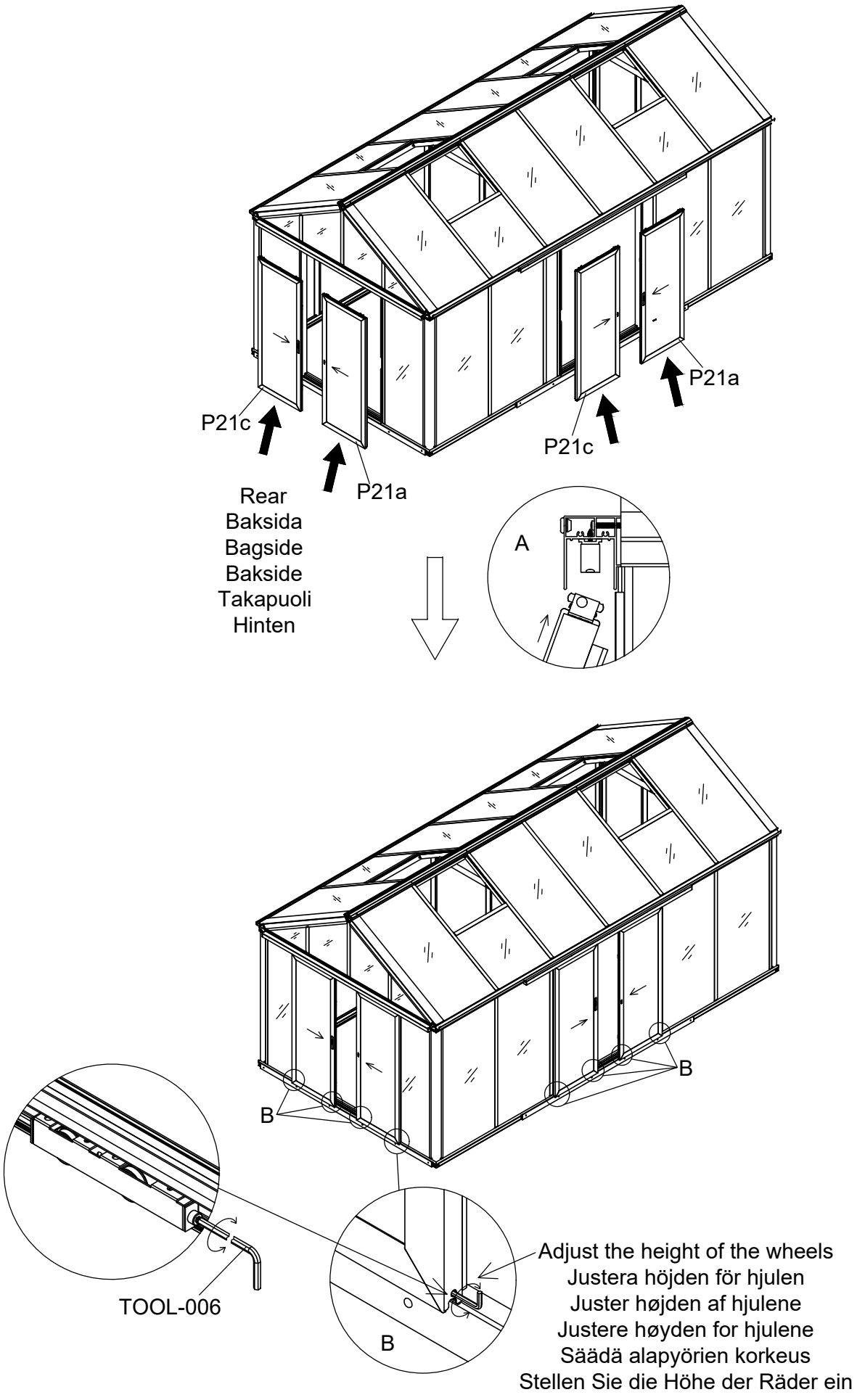
P21c
P21a
P21c
P21a
Rear
Baksida
Bagside
Bakside
Takapuoli
Hinten
A
B
B
TOOL-006
B
Adjust the height of the wheels
Justera höjden för hjulen
Juster højden af hjulene
Justere høyden for hjulene
Säädä alapyörien korkeus
Stellen Sie die Höhe der Räder ein

Part	NO.	QTY.	Length(MM)
	T01N	1	PCS
	T01A	1	PCS
	J02	2	PCS
	7B33-021A	2	PCS
	7B33-022R	1	PCS
	7B33-022L	1	PCS
	M4-40	2	PCS
	Mi4-17	2	PCS
	Z3.5-25	4	PCS
	Za4.2-13	8	PCS

Part	NO.	QTY.	Length(MM)	CTN NO.
	T01N	1	PCS	3010P-TD
	T01A	1	PCS	3010P-TD
	J02	2	PCS	3010P-TD
	7B33-021A	2	PCS	3010P-TD
	7B33-022R	1	PCS	3010P-TD
	7B33-022L	1	PCS	3010P-TD
	M4-40	2	PCS	3010P-TD
	Mi4-17	2	PCS	3010P-TD
	Z3.5-25	4	PCS	3010P-TD
	Za4.2-13	8	PCS	3010P-TD

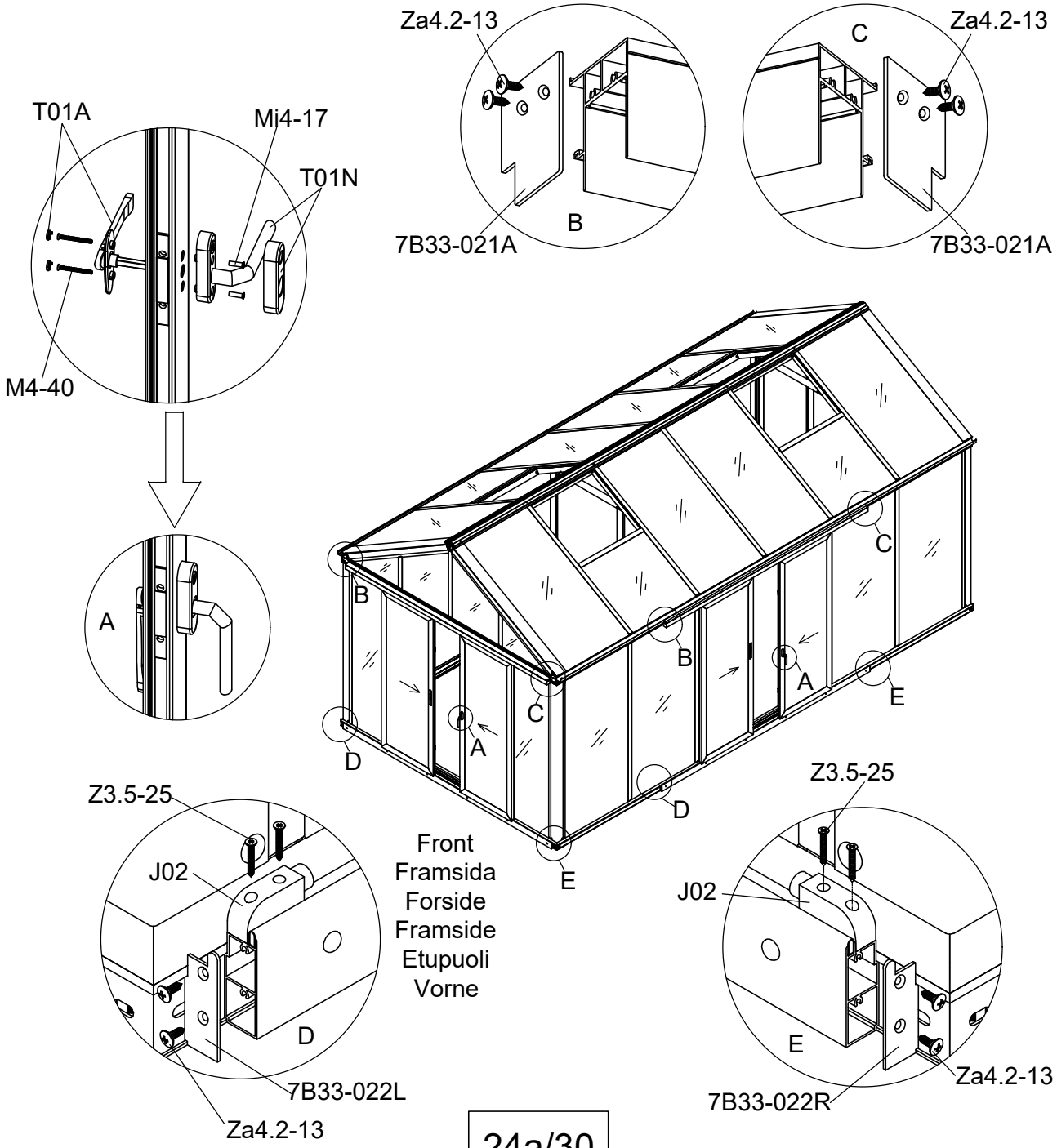

Part	NO.	QTY.	Length(MM)	CTN NO.
	T01N	2	PCS	3010P-TD
	T01A	2	PCS	3010P-TD
	J02	4	PCS	3010P-TD
	7B33-021A	4	PCS	3010P-TD
	7B33-022R	2	PCS	3010P-TD
	7B33-022L	2	PCS	3010P-TD
	M4-40	4	PCS	3010P-TD
	Mi4-17	4	PCS	3010P-TD
	Z3.5-25	8	PCS	3010P-TD
	Za4.2-13	16	PCS	3010P-TD

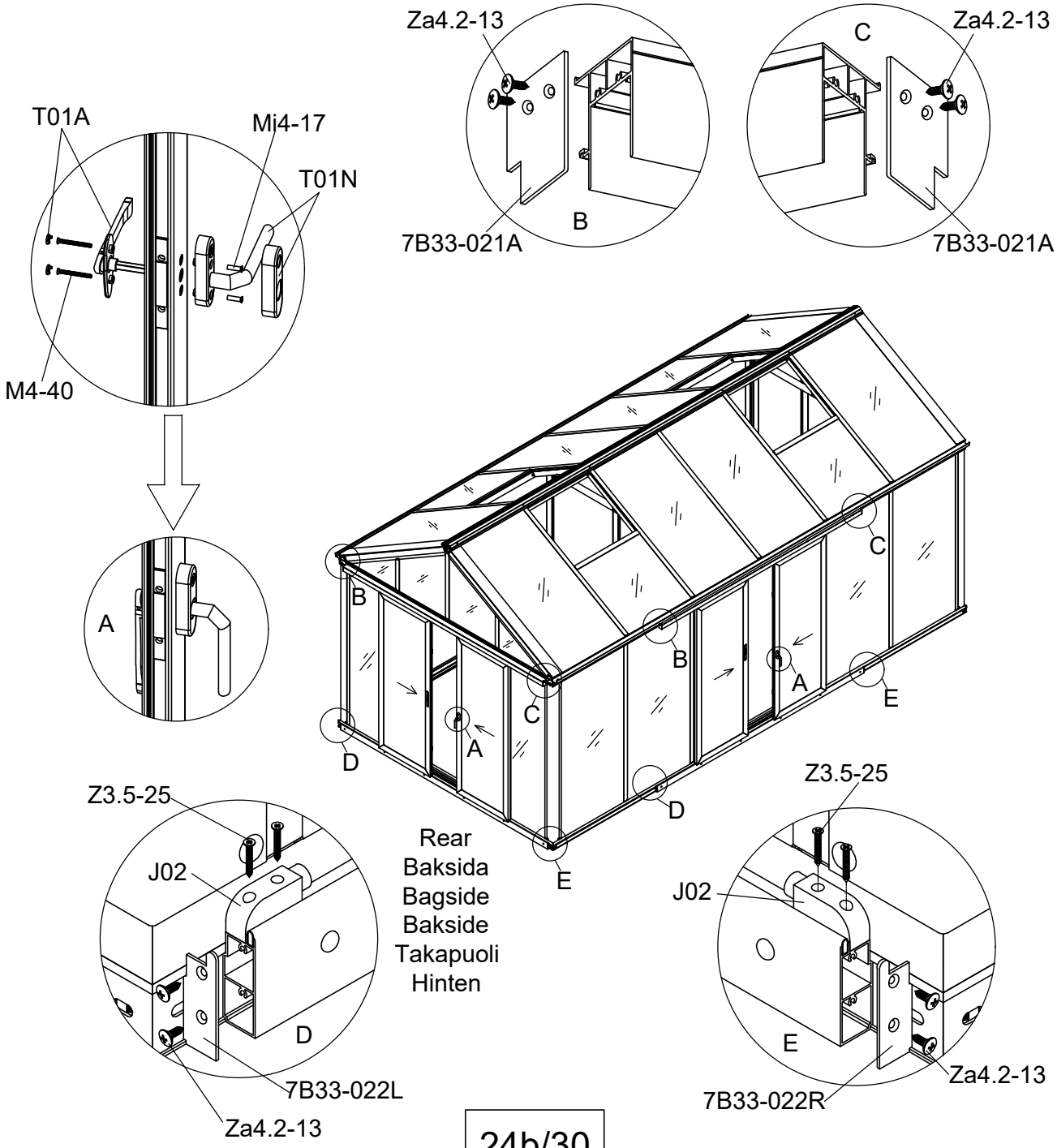

Part	NO.	QTY.				Length(MM)
		3601	3602	3603	3604	
	41X-Y80	2	2	4	4	1087
	41X-Y81	4	4	8	8	887
	41X-Y82	2	2	4	4	1087
	W02	8	8	16	16	22
	W04	8	8	16	16	PCS
	J12	6	6	12	12	PCS

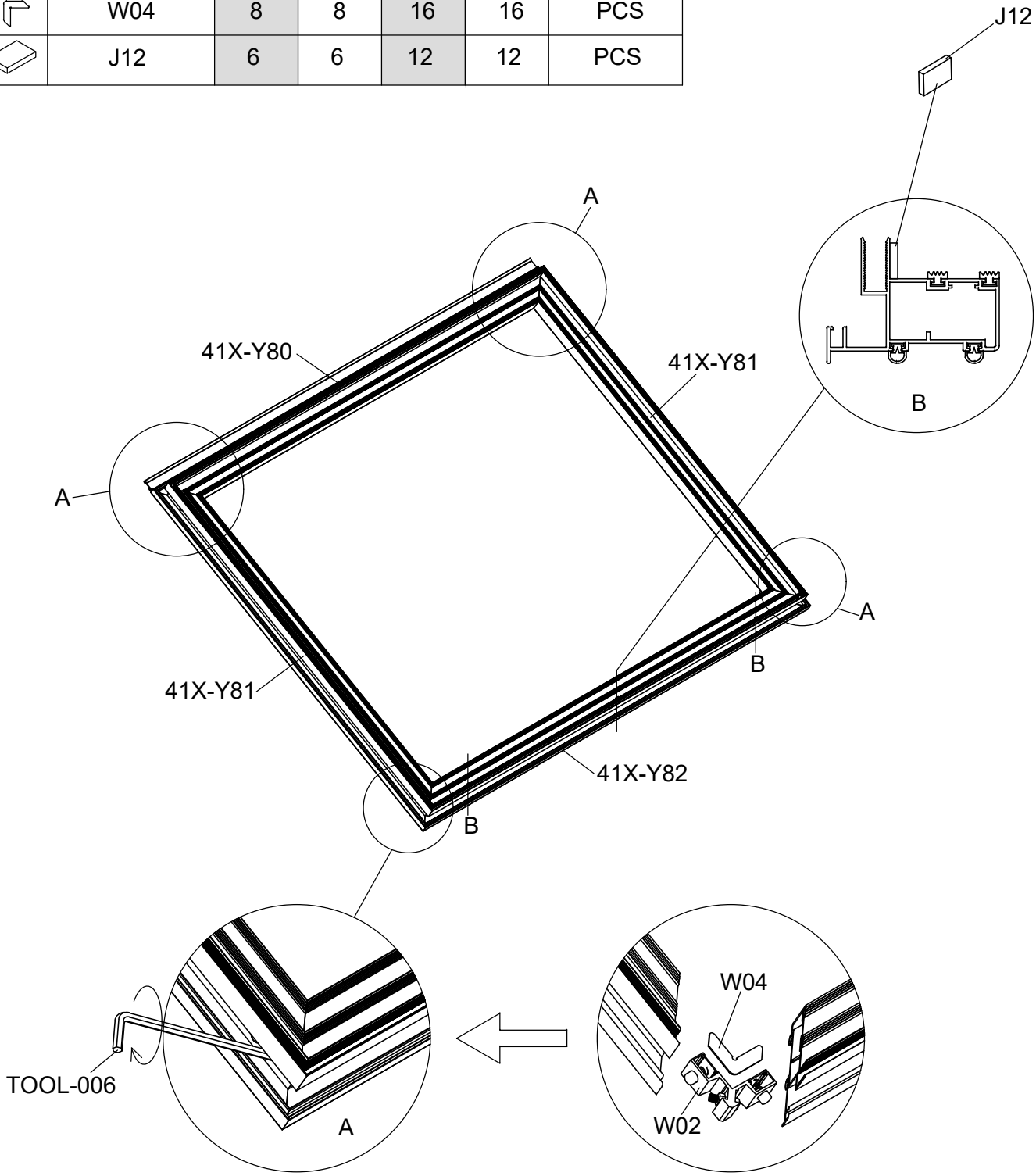

Part	NO.	QTY.				Length(MM)
		3601	3602	3603	3604	
	41X-Y83	4	4	8	8	887
	41X-Y84	4	4	8	8	1076
	1032×831	2	2	4	4	1032

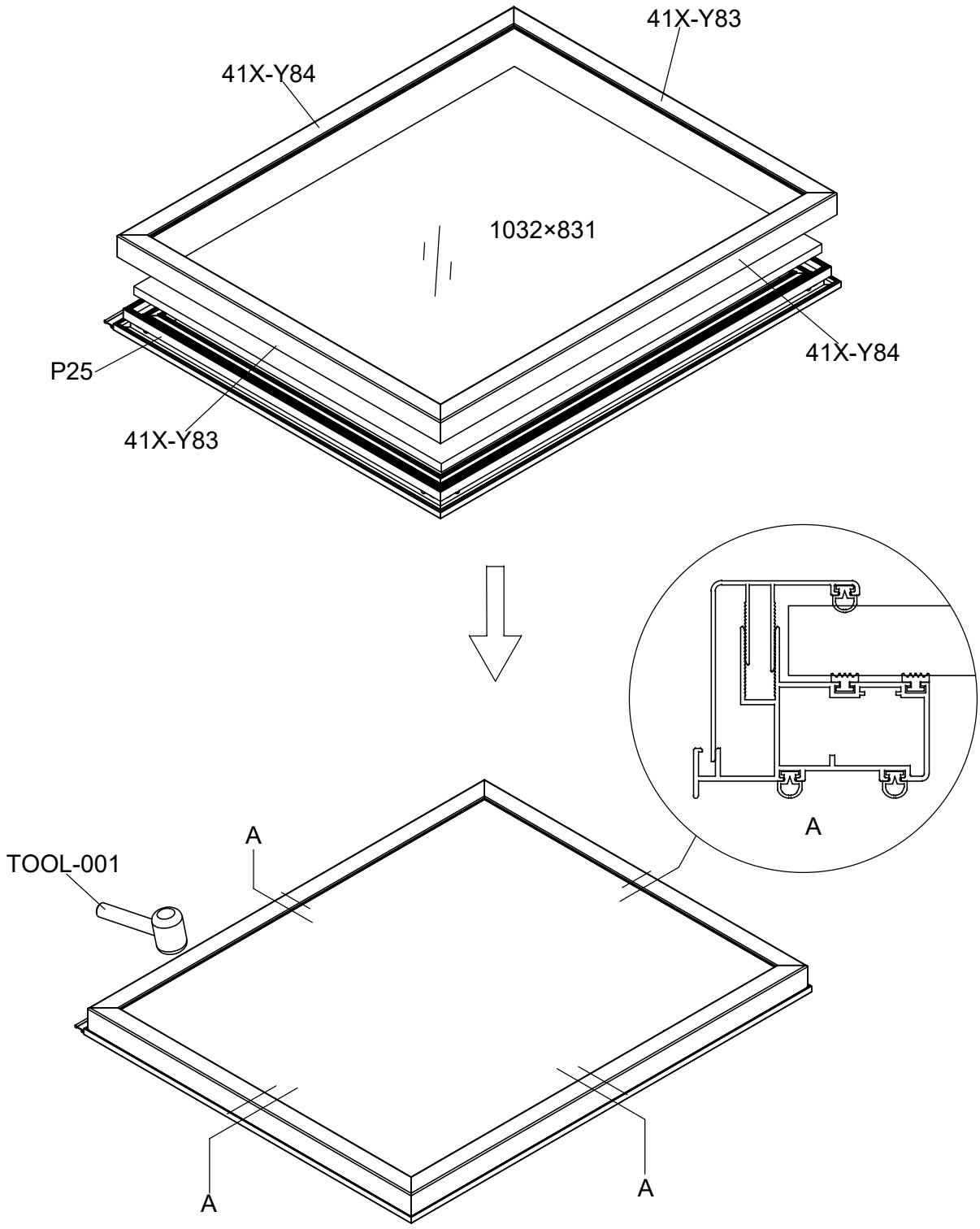

Part	NO.	QTY.				Length(MM)
		3601	3602	3603	3604	
	7C26-022	8.5M	8.5M	17M	17M	

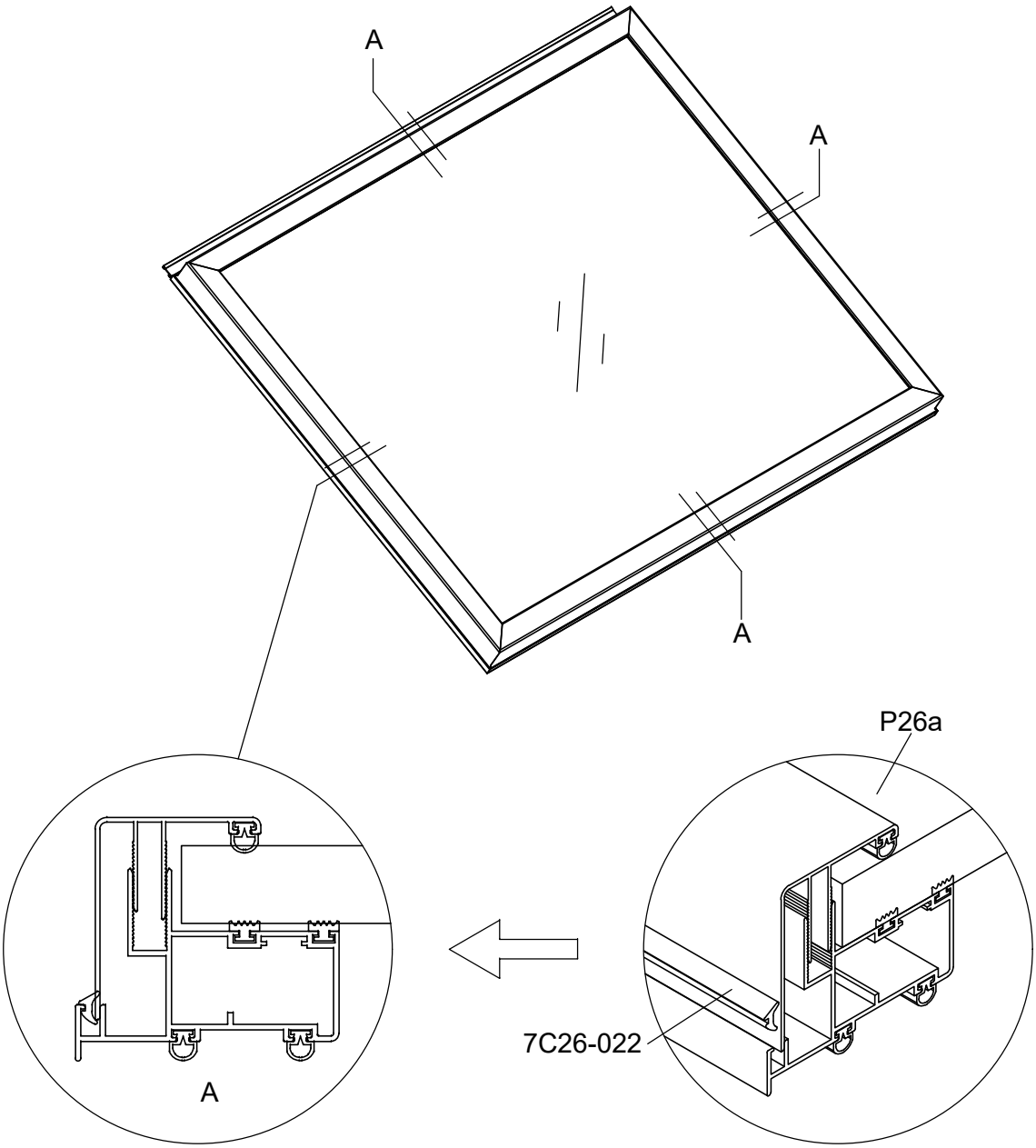

Part	NO.	QTY.				Length(MM)
		3601	3602	3603	3604	
	T07	4	4	8	8	PCS

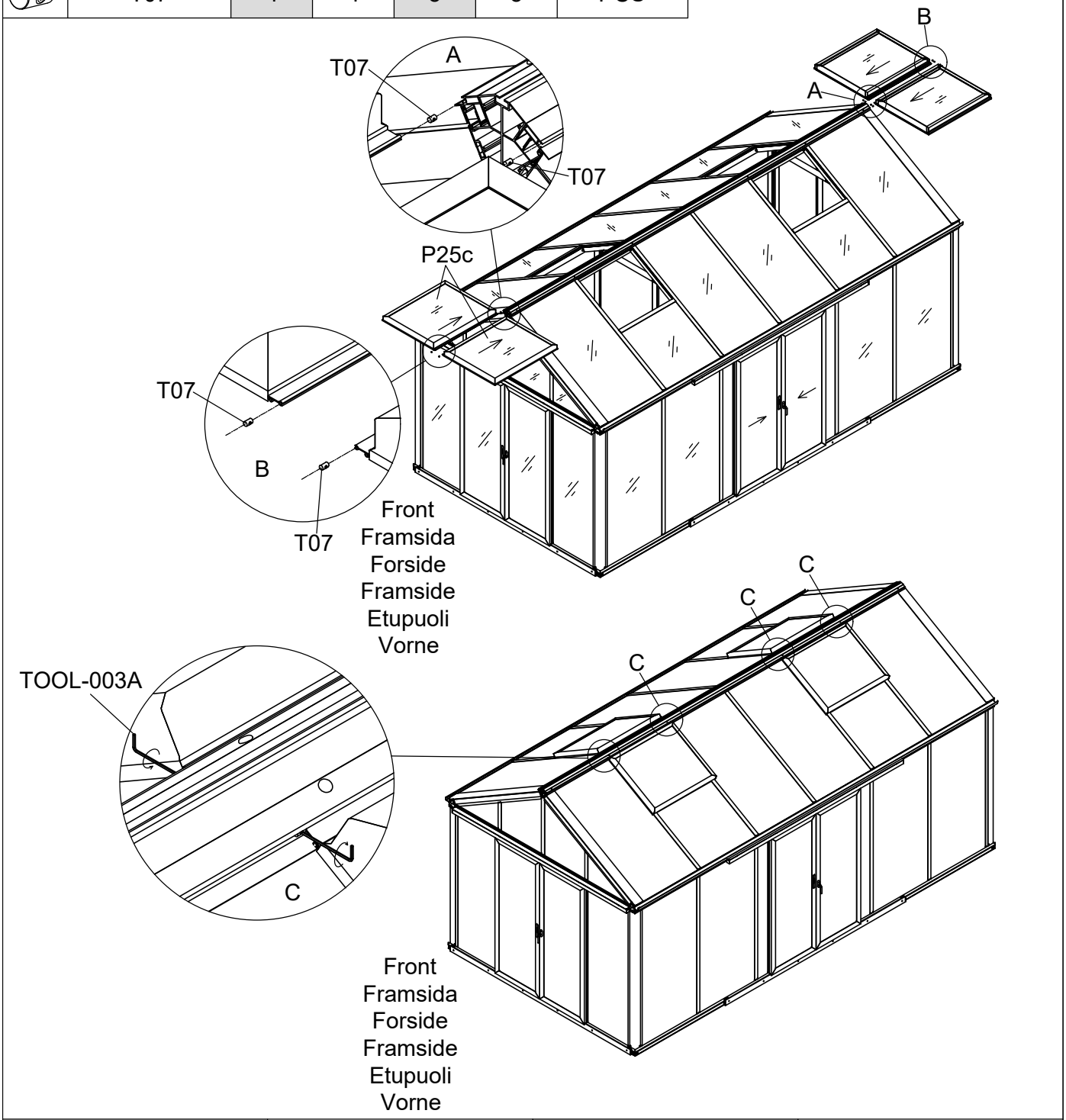

3601	3602	3603	3604
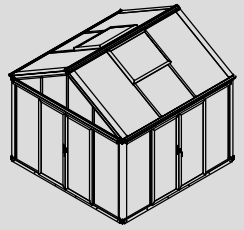	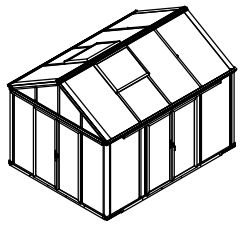	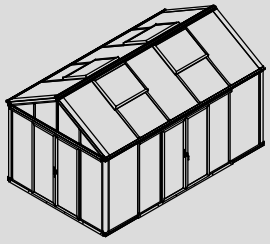	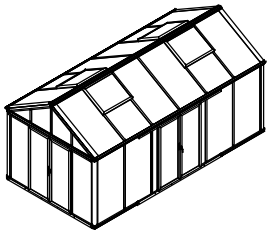

Part	Product	NO.	Length(MM)	CTN NO.	QTY.	Code
	3602	41X-Y62-4C	603	3680P-D-4F	4	A009
	3603	41X-Y62-5C	1103	3680P-D-5F		
	3604	41X-Y62-6C	1604	3680P-D-6F		

Part	NO.	QTY.	Length(MM)	CTN NO.
	41X-Y61-A	1	3023	
	41X-Y61-A	1	3023	3680P-D-4G

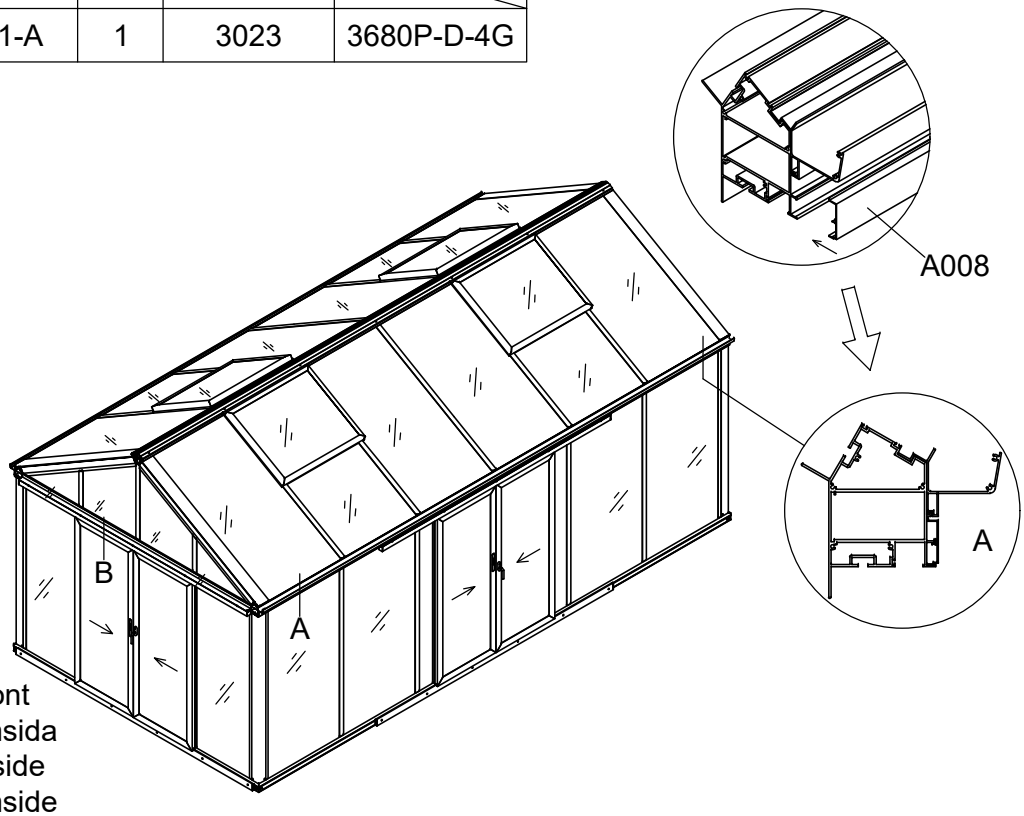

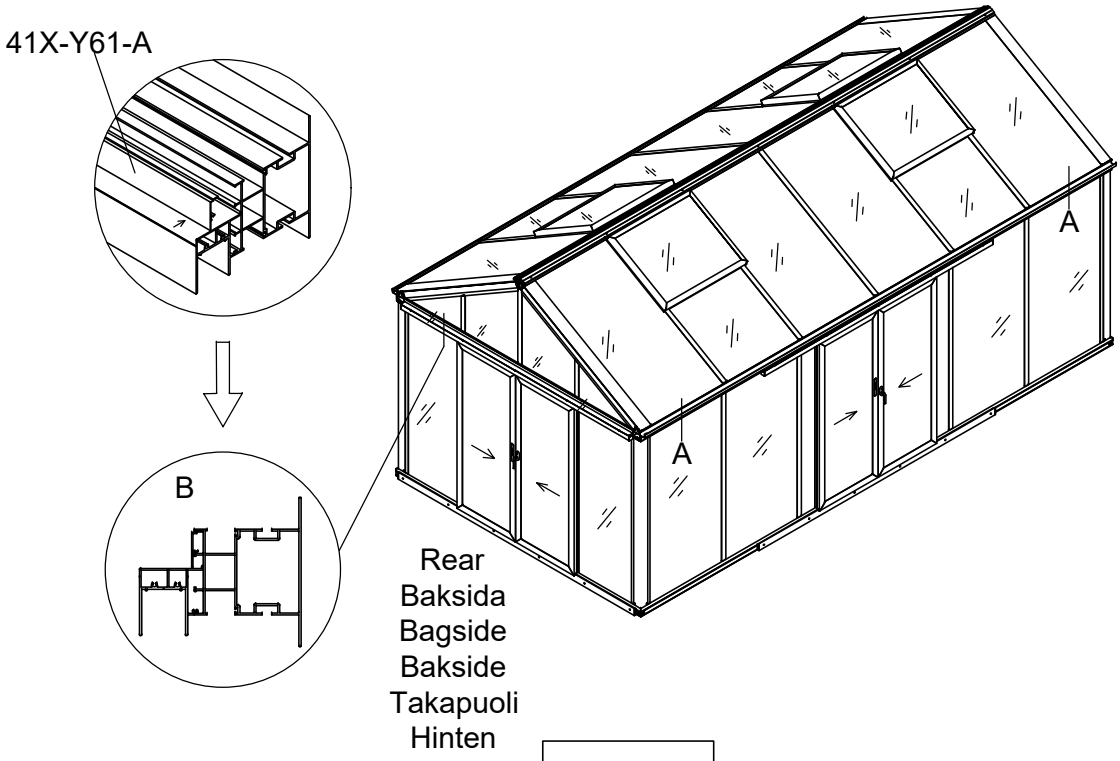

Part	NO.	QTY.	Length(MM)
	7C33-S02	2	PCS

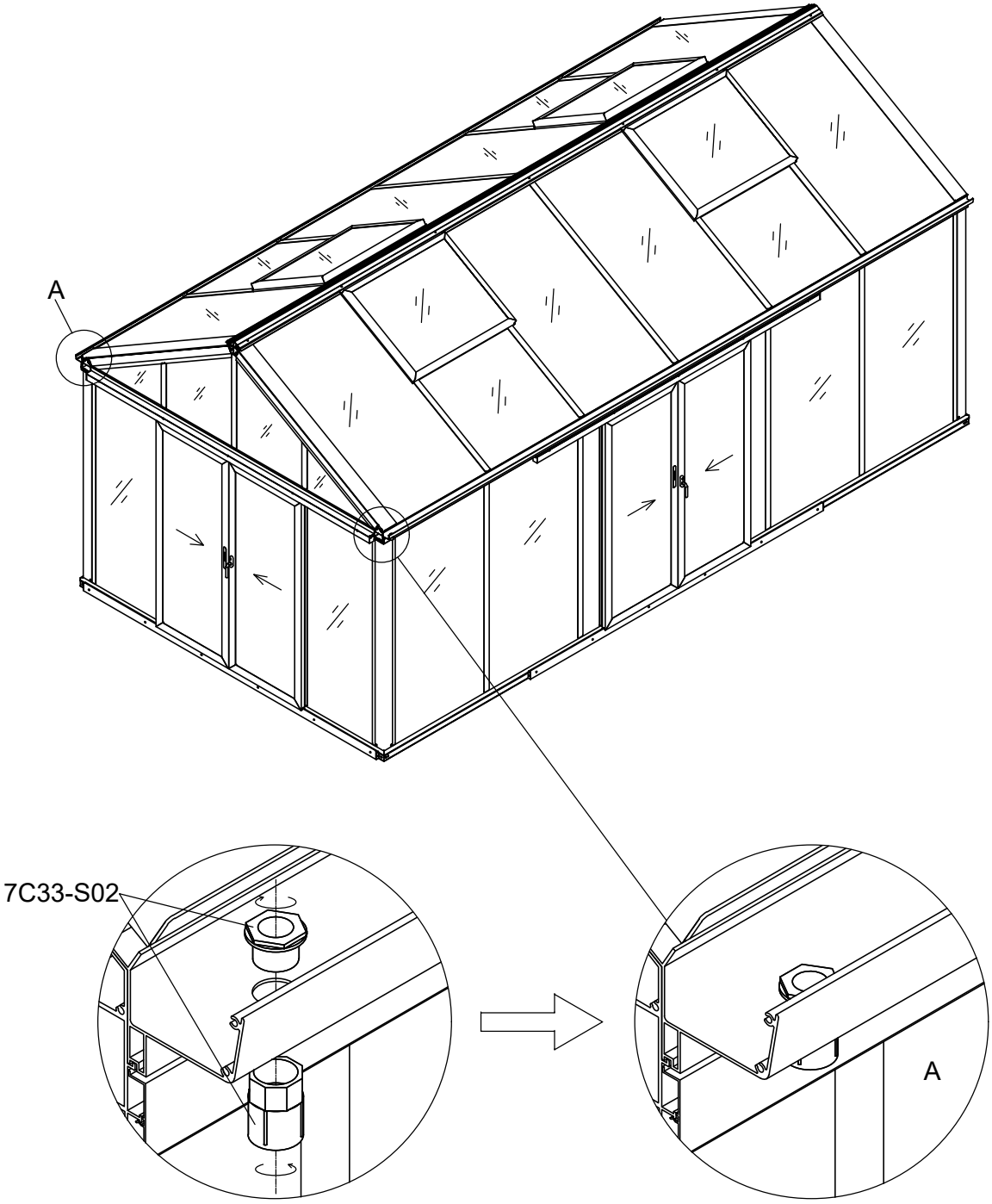

Part	NO.	QTY.	Length(MM)
	7C33-S01	2	1980
	7C33-S03	4	PCS
	Z4.8-25	4	PCS

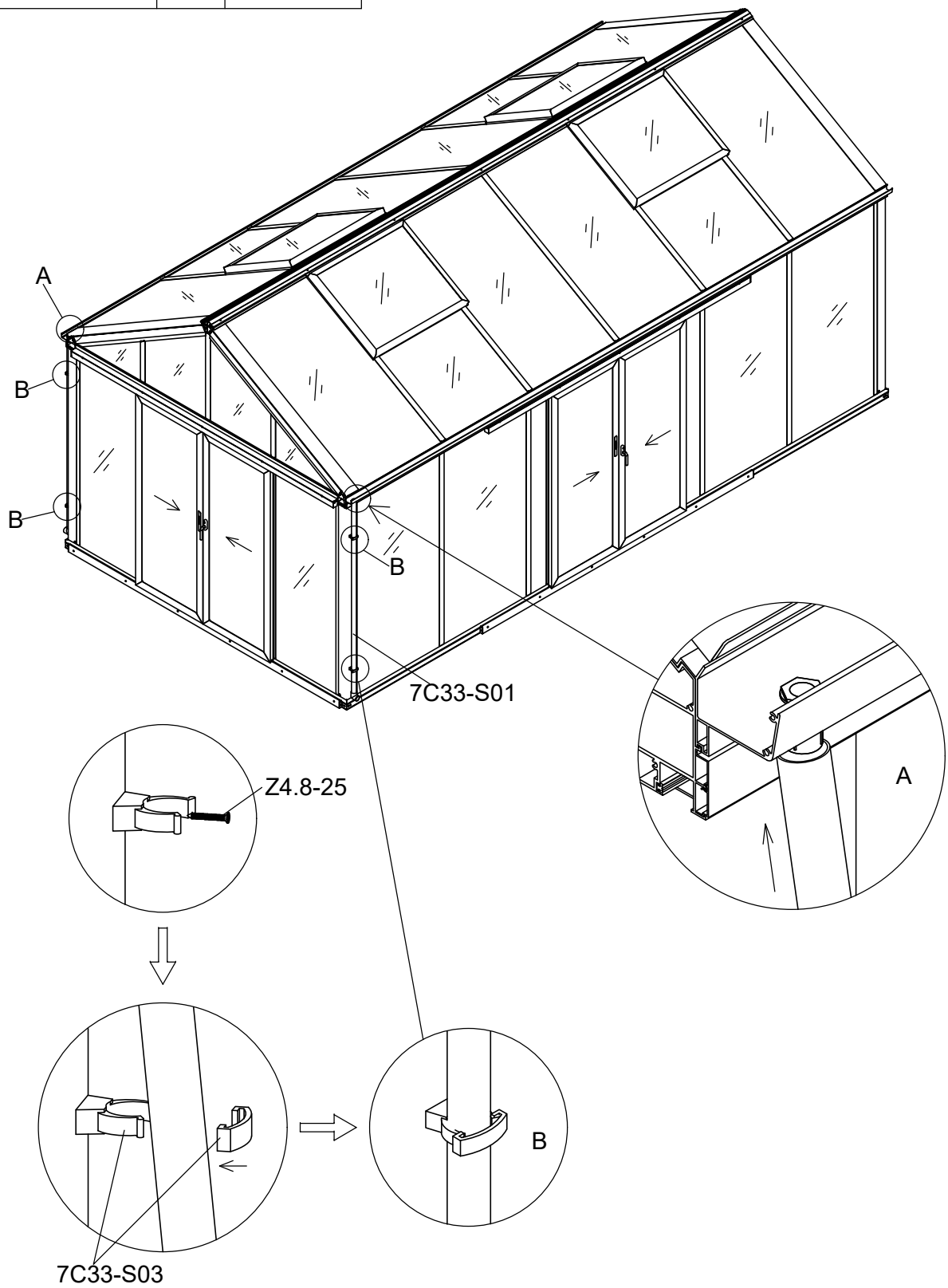

Part	NO.	QTY.	Length(MM)
	7B33-016	2	PCS
	7C33-005	2	PCS
	7B33-015L	2	PCS
	7B33-015R	2	PCS
	7C33-004	4	PCS
	Za4.2-13	36	PCS

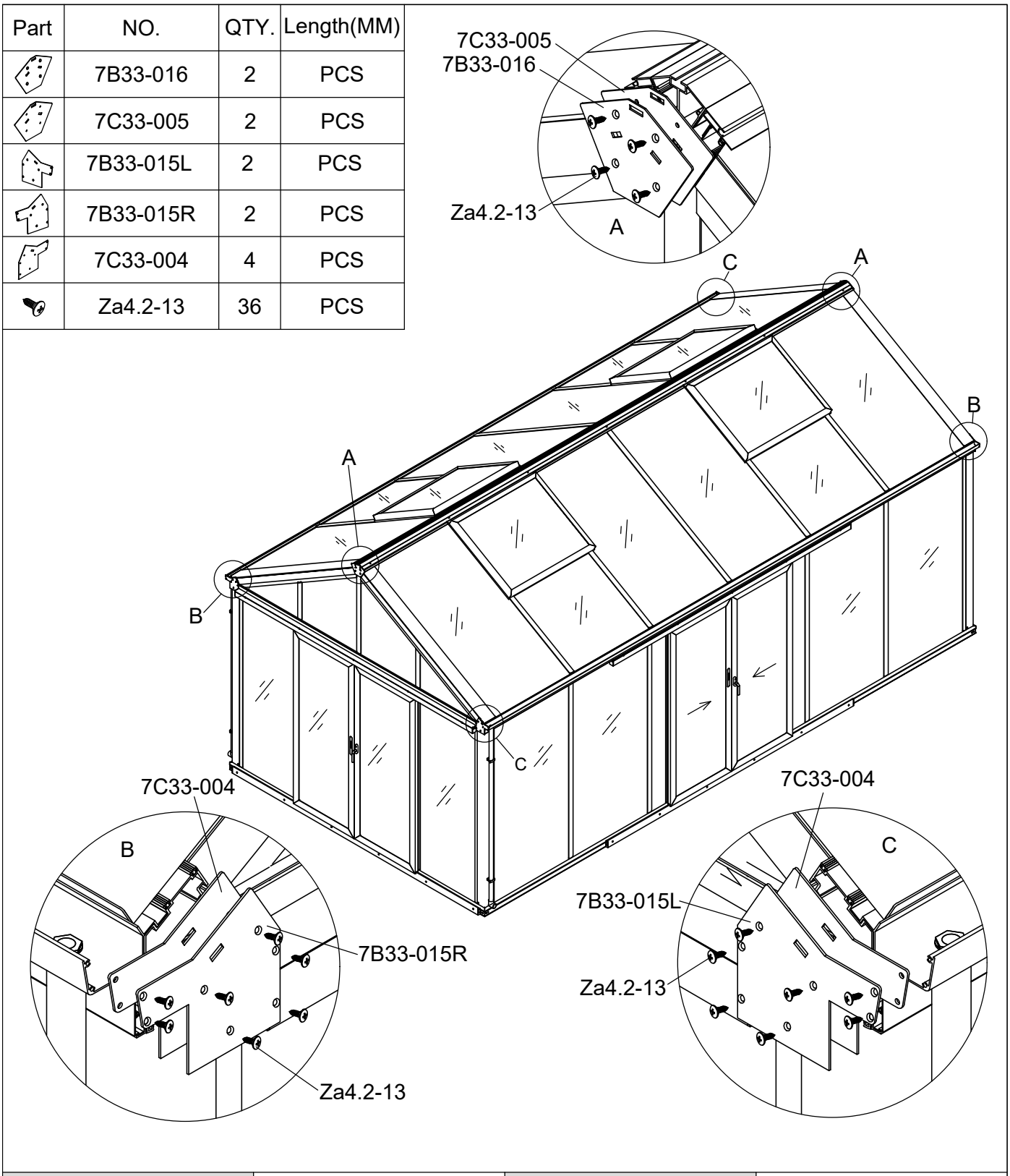

3601	3602	3603	3604
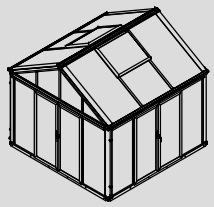	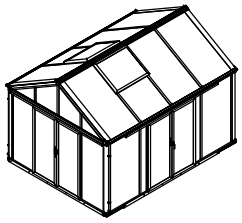	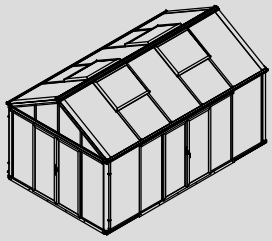	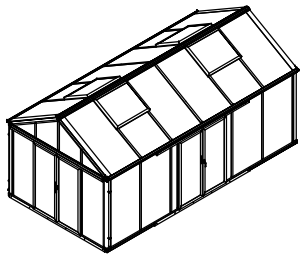

Part	Product	NO.	Length(MM)	Code
	3601	41X-Y11-3	3239	A001
	3602	41X-Y11-4	4239	
	3603	41X-Y11-5	5240	
	3604	41X-Y11-6	6241	

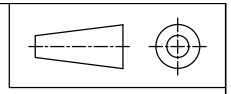

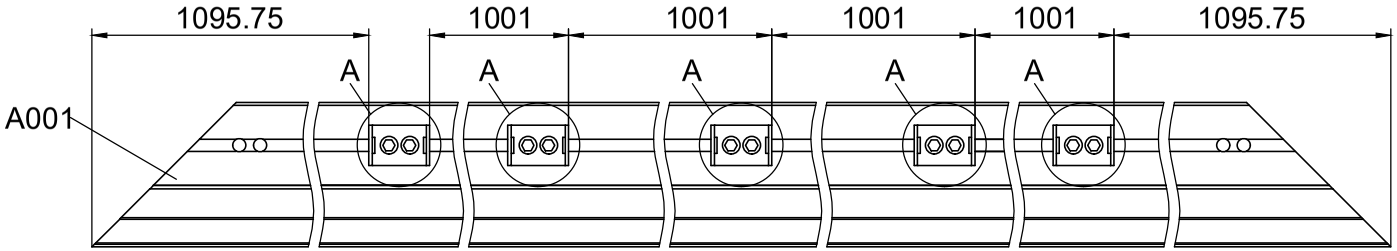

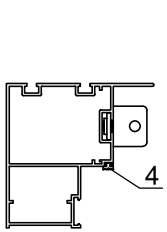

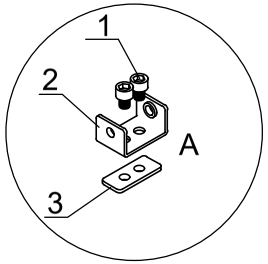

NO.	
1	M8-10
2	7B33-005
3	7B33-004
4	7C33-002

F1

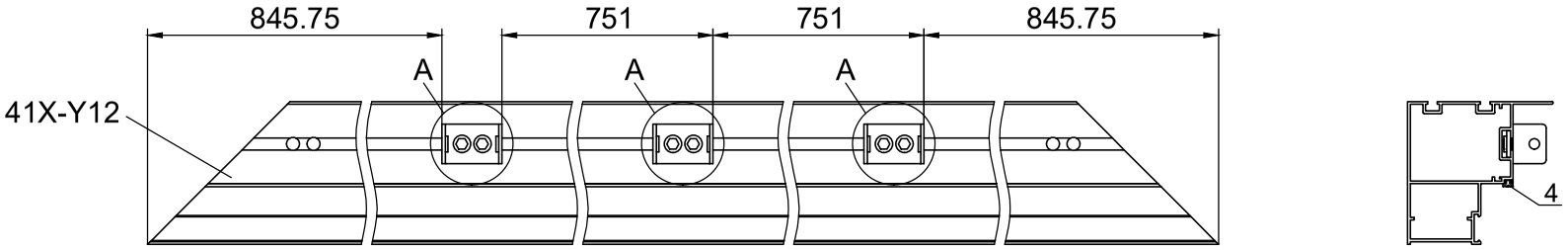

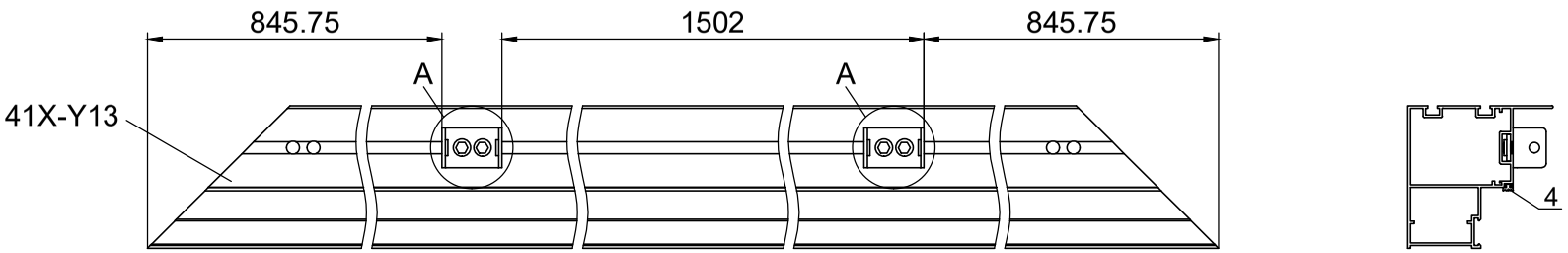

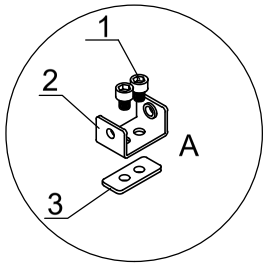

NO.	
1	M8-10
2	7B33-005
3	7B33-004
4	7C33-002

F2

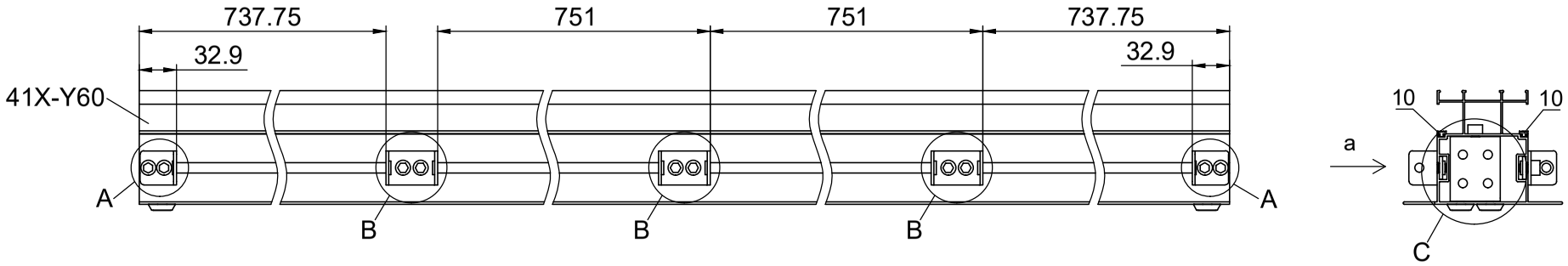

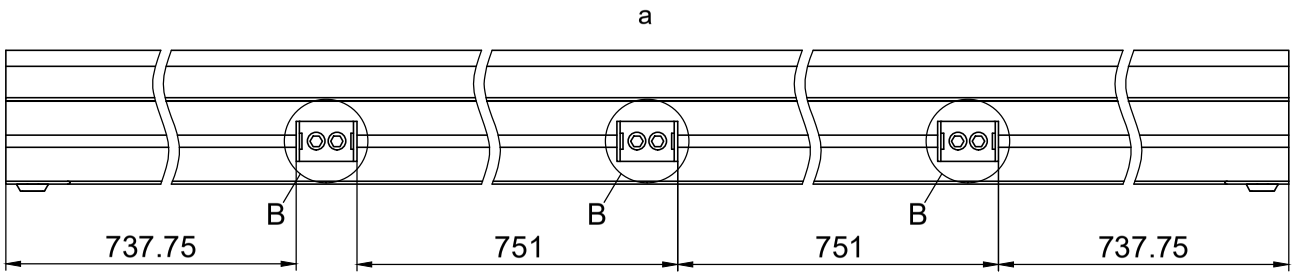

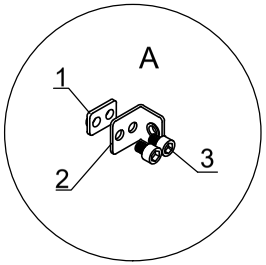

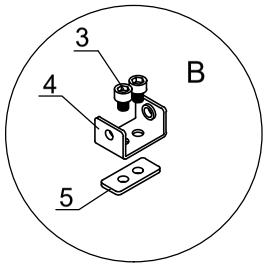

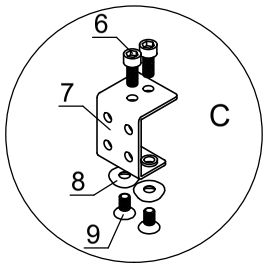

NO.	
1	7B33-006
2	7B33-007
3	M8-10
4	7B33-005
5	7B33-004
6	M8-20
7	7B33-009
8	7B33-020
9	Si8-16
10	7C33-002

F3

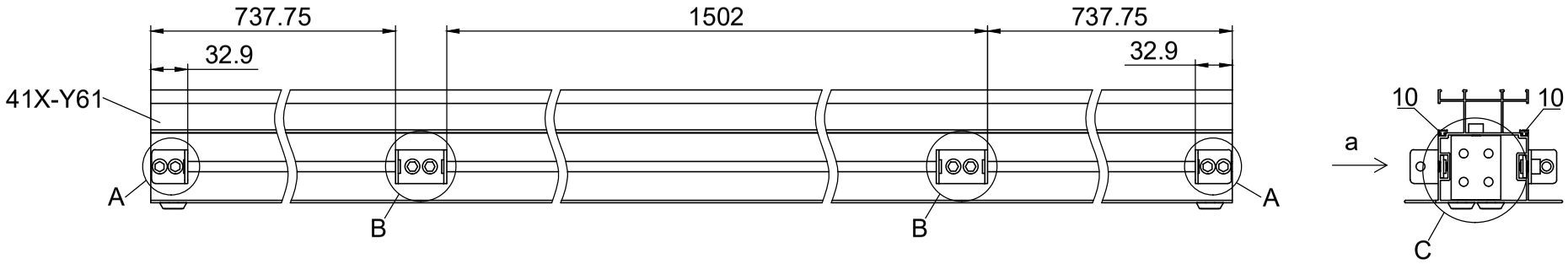

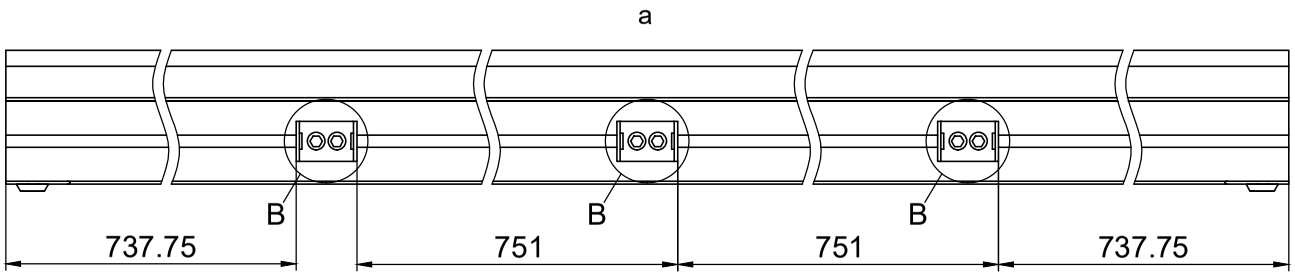

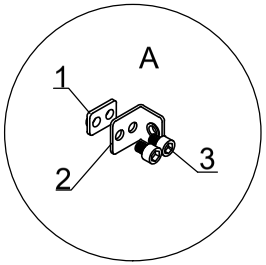

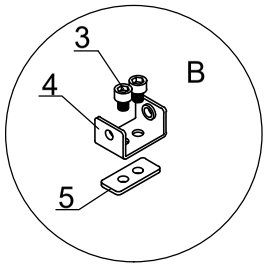

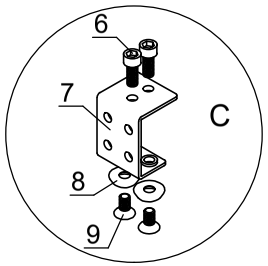

NO.	
1	7B33-006
2	7B33-007
3	M8-10
4	7B33-005
5	7B33-004
6	M8-20
7	7B33-009
8	7B33-020
9	Si8-16
10	7C33-002

F4

Part	Product	NO.	Length(MM)	Code
	3601	41X-Y62-3	3228	A002
	3602	41X-Y62-4	4228	
	3603	41X-Y62-5	5229	
	3604	41X-Y62-6	6230	

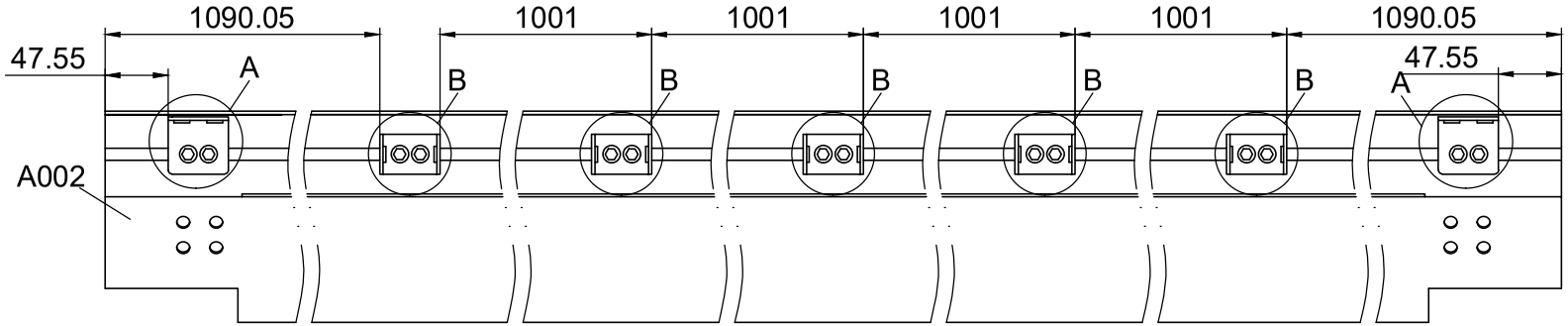

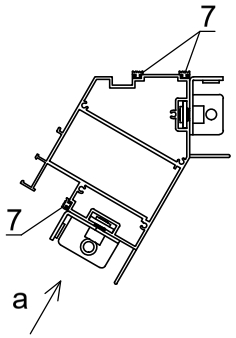

a

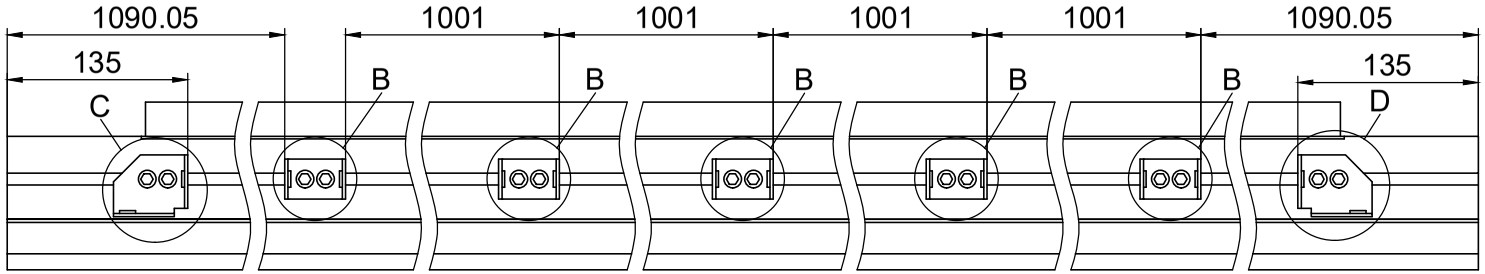

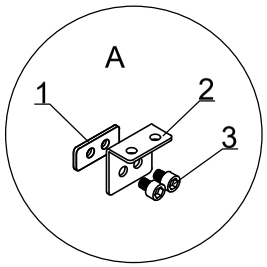

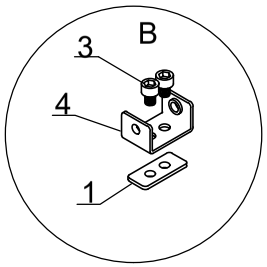

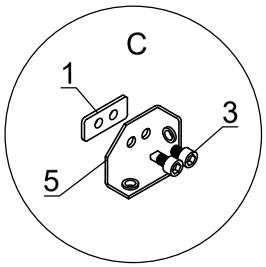

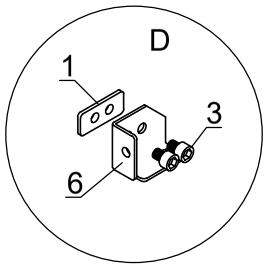

F5

	NO.
1	7B33-004
2	7B33-010
3	M8-10
4	7B33-005
5	7B33-003
6	7B33-002
7	7C33-002

Part	Product	NO.	Length(MM)	Code
	3601	41X-Y63-3	3207	A003
	3602	41X-Y63-4	4207	
	3603	41X-Y63-5	5208	
	3604	41X-Y63-6	6209	

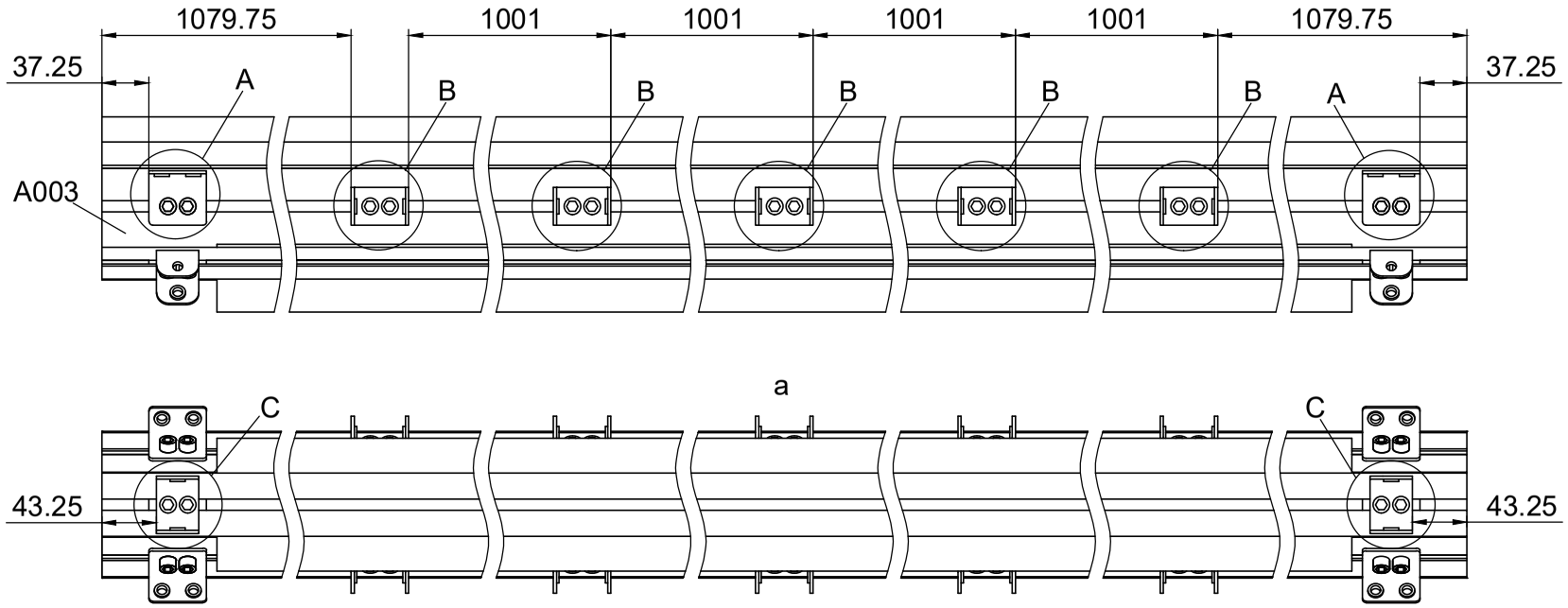

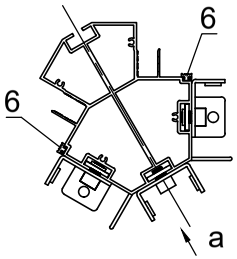

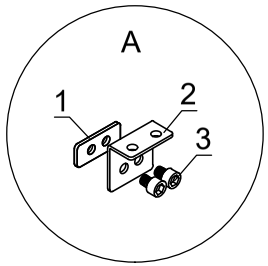

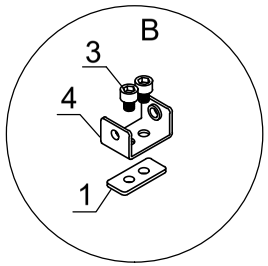

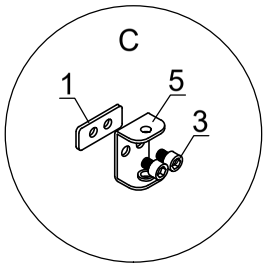

NO.	
1	7B33-004
2	7B33-010
3	M8-10
4	7B33-005
5	7B33-011
6	7C33-002

F6

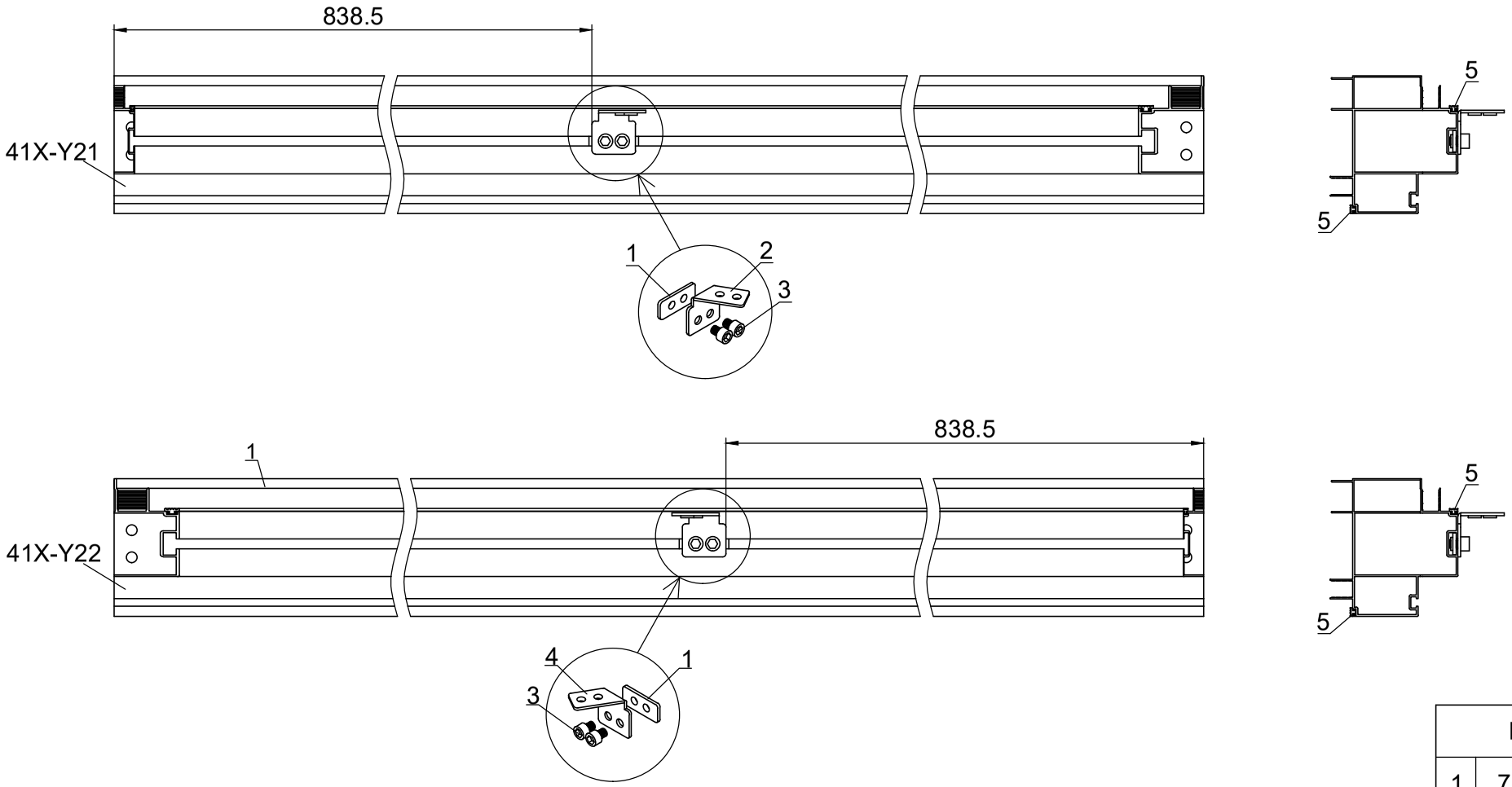

NO.	
1	7B33-004
2	7B33-013R
3	M8-10
4	7B33-013L
5	7C33-002

F7

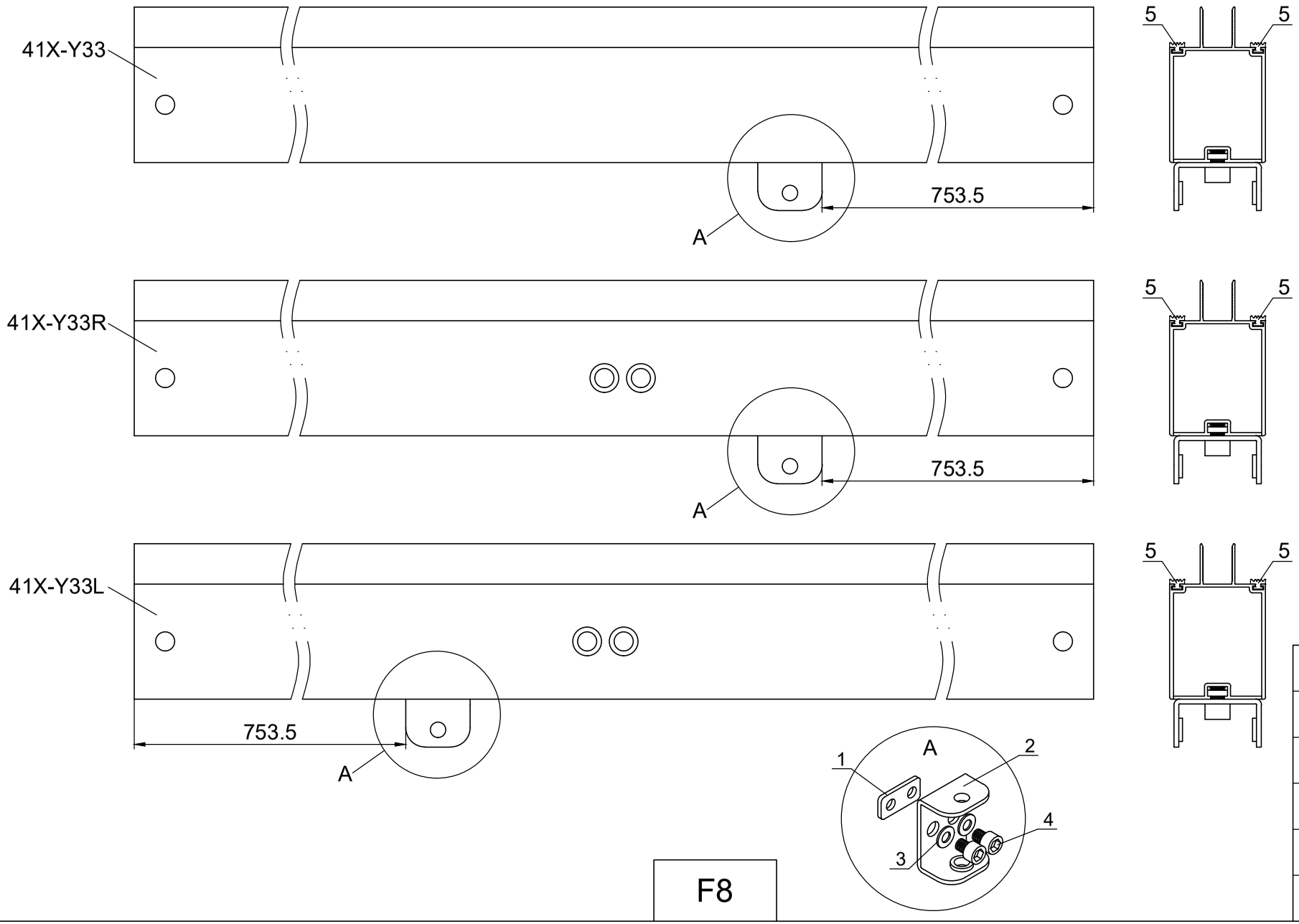

NO.	
1	7B26-033
2	7B33-011
3	MD6
4	M6-8
5	7C33-002

F8