Green Room®

BY WILLAB GARDEN

| | | |
|---|---|---|
| 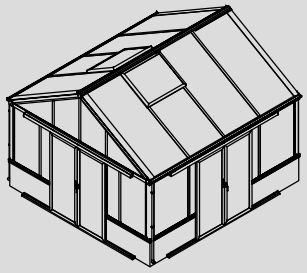 | 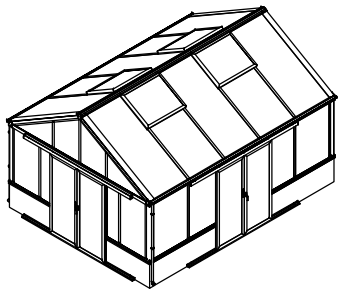 | 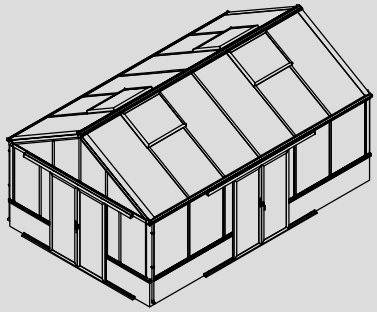 |
| 3711-XDS&XDL | 3712-XDS&XDL | 3713-XDS&XDL |
| 421×396×328cm | 521×396×328cm | 621×396×328cm |

Product size (L×W×H):
Storlek (L×B×H):
Størrelse (L×B×H):
Størrelse (L×B×H):
Koko (P×L×K):
Produktgröße (L×B×H):

Please read carefully before assembling.
Two people are needed.

Läs noggrant innan montering.
Det krävs två personer för montering.

Læs venligst omhyggeligt, før montering.
Der kræves to personer til montering.

Les monteringsanvisningen nøye innen montering.
Det kreves to personer for montering.

Lue ohjeet huolellisesti läpi ennen asentamista.
Asentamiseen tarvitaan kaksi henkilöä.

Bitte vor dem Aufbau sorgfältig lesen.
Zwei Personen werden benötigt.

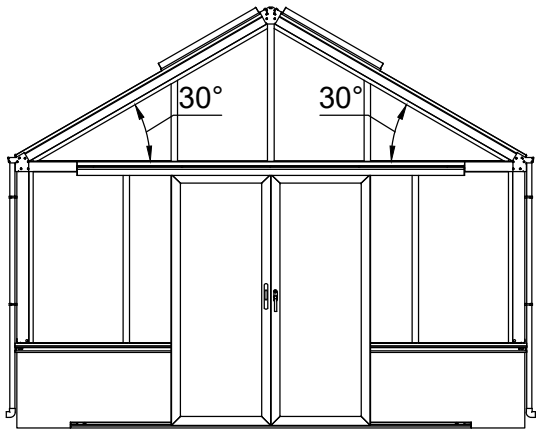


251020

| Part | 3711 | | 3712 | | 3713 | | QTY. | Code | Page |
|---|---|---|---|---|---|---|---|---|---|
| | NO. | Length (MM) | NO. | Length (MM) | NO. | Length (MM) | | | |
| | 41X-Y62-4 | 4228 | 41X-Y62-5 | 5229 | 41X-Y62-6 | 6230 | 2 | A003 | P4 |
| | 41X-Y63-4 | 4207 | 41X-Y63-5 | 5208 | 41X-Y63-6 | 6209 | 1 | A004 | P6 |
| | 41X-Y62-4BR | 4228 | 41X-Y62-5BR | 5229 | 41X-Y62-6BR | 6230 | 1 | A005 | P9 |
| | 41X-Y62-4BL | 4228 | 41X-Y62-5BL | 5229 | 41X-Y62-6BL | 6230 | 1 | A006 | P9 |
| | 41X-Y63-4A | 4207 | 41X-Y63-5A | 5208 | 41X-Y63-6A | 6209 | 2 | A008 | P18 |

| Part | NO. | QTY. | | | Length(MM) | Page |
|---|---|---|---|---|---|---|
| | | 3711 | 3712 | 3713 | | |
| | 41A-Y30 | 14 | 16 | 18 | 1335 | P5 |
| | 51X-Y33R | 2 | 4 | 4 | 2148 | P8 |
| | 51X-Y33L | 2 | 4 | 4 | 2148 | P8 |
| | 41X-Y34 | 2 | 4 | 4 | 951 | P8 |
| | 51X-Y33 | 2 | 0 | 2 | 2148 | P8 |
| | 41X-Y35 | 3 | 4 | 5 | 1500 | P10 |
| | 41A-Y01 | 14 | 16 | 18 | 1335 | P12 |
| | 41X-Y101 | 8 | 10 | 12 | 980 | P17 |
| | 51X-Y06 | 6 | 8 | 10 | 2216 | P17 |
| | 41X-Y07 | 2 | 4 | 4 | 950 | P17 |
| | 41X-Y80 | 2 | 4 | 4 | 1087 | P25 |
| | 41X-Y82 | 2 | 4 | 4 | 1087 | P25 |
| | 41X-Y81 | 4 | 8 | 8 | 887 | P25 |
| | 41X-Y84 | 4 | 8 | 8 | 1076 | P25 |
| | 41X-Y83 | 4 | 8 | 8 | 877 | P25 |

| Part | NO. | QTY. | Length(MM) | Page |
|---|---|---|---|---|
| | 41A-Y20 | 4 | 1336 | P3 |
| | 51X-Y61 | 1 | 3774 | P4 |
| | 51X-Y60 | 1 | 3774 | P4 |
| | 51X-Y32 | 2 | 1074 | P6 |
| | 51X-Y21 | 2 | 2148 | P7 |
| | 51X-Y22 | 2 | 2148 | P7 |
| | 51X-Y31R | 2 | 629 | P7 |
| | 51X-Y31L | 2 | 629 | P7 |
| | 41A-Y02 | 8 | 1335 | P12 |
| | 51X-Y03 | 2 | 1074 | P14~15 |
| | 51X-Y04R | 2 | 629 | P14~15 |
| | 51X-Y04L | 2 | 629 | P14~15 |
| | 51X-Y05R | 2 | 2146 | P14~15 |
| | 51X-Y05L | 2 | 2146 | P14~15 |
| | 51X-Y06B | 4 | 2216 | P17 |
| | 41A-Y90 | 2 | 1958 | P19 |
| | 41A-Y91R | 1 | 1958 | P19 |
| | 41X-Y92R | 1 | 776 | P19 |
| | 41X-Y93 | 2 | 776 | P19 |
| | 41A-Y91L | 1 | 1958 | P19 |
| | 41X-Y92L | 1 | 776 | P19 |
| | 41A-Y97-B | 2 | 1918 | P21 |
| | 41A-Y97-A | 2 | 1918 | P21 |
| | 41A-Y97-R | 1 | 1951 | P21 |
| | 41A-Y97-L | 1 | 1951 | P21 |
| | 41A-Y94 | 1 | 1946 | P21 |
| | 41A-Y98-R | 1 | 2000 | P22 |
| | 41A-Y98-L | 1 | 2000 | P22 |
| | 41A-Y99 | 1 | 1410 | P22 |
| | 41A-Y100 | 1 | 1410 | P22 |

| Part | NO. | QTY. | Length(MM) | Page |
|---|---|---|---|---|
| | 41A-Y64 | 1 | 3016 | P23 |
| | 41A-Y17 | 1 | 3120 | P23 |
| | 41A-Y98A-R | 1 | 1923 | P23 |
| | 41A-Y98A-L | 1 | 1923 | P23 |

| Part | NO. | QTY. | | | Length(MM) | Page |
|---|---|---|---|---|---|---|
| | | 3711 | 3712 | 3713 | | |
| | M8-20 | 60 | 68 | 68 | PCS | P3~8 |
| | Si8-16 | 132 | 152 | 172 | PCS | P3~10 |
| | 7B33-020 | 137 | 157 | 177 | PCS | P3~23 |
| | 7C33-001 | 16 | 24 | 24 | PCS | P3~8 |
| | 7C28-004 | 25 | 29 | 33 | PCS | P9~23 |
| | Z4.2-13 | 30 | 34 | 38 | PCS | P9~21 |
| | J12 | 111 | 129 | 141 | PCS | P11~25 |
| | 7B33-019 | 6 | 8 | 10 | PCS | P17 |
| | Z4.2-50 | 15 | 17 | 19 | 46 | P18~23 |
| | W04 | 24 | 32 | 32 | PCS | P19~25 |
| | W02 | 8 | 16 | 16 | PCS | P25 |
| | T07 | 4 | 8 | 8 | PCS | P26 |
| | | | | | | |
| | 7C26-009A | 38.5M | 42.5M | 46.5M | | P13~16 |
| | 7C26-022 | 8.5M | 17M | 17M | | P25 |

| Part | NO. | QTY. | Length(MM) | Page |
|---|---|---|---|---|
| | 7B33-001 | 4 | PCS | P2 |
| | W03 | 12 | 30 | P2~19 |
| | PS8-80 | 20 | PCS | P2~22 |
| | J09 | 8 | PCS | P2 |
| | 7B33-002 | 4 | PCS | P3 |
| | 7B33-003 | 4 | PCS | P3 |
| | J08 | 1 | PCS | P3 |
| | 7B33-008 | 4 | PCS | P4 |
| | 7B33-017 | 2 | PCS | P17 |
| | 7B33-018 | 2 | PCS | P17 |
| | T04 | 2 | PCS | P21 |
| | Z4.2-38 | 4 | PCS | P21 |
| | Z3.5-25 | 8 | PCS | P21~24 |
| | M8-35 | 2 | PCS | P22 |
| | Si8-35 | 2 | PCS | P22 |
| | Si6-35 | 4 | PCS | P22 |
| | J05 | 12 | PCS | P22 |
| | Si6-16 | 8 | PCS | P22 |
| | Si8-25 | 3 | PCS | P23 |
| | 7C26-031 | 2 | PCS | P23 |
| | T01N | 1 | PCS | P24 |
| | T01A | 1 | PCS | P24 |
| | J02 | 2 | PCS | P24 |
| | 7B33-049 | 1 | PCS | P24 |
| | 7B33-050 | 1 | PCS | P24 |
| | 7B33-051 | 1 | PCS | P24 |
| | 7B33-052 | 1 | PCS | P24 |
| | M4-40 | 2 | PCS | P24 |
| | Mi4-17 | 2 | PCS | P24 |
| | Za4.2-13 | 44 | PCS | P24~30 |

| Part | NO. | QTY. | Length(MM) | Page |
|---|---|---|---|---|
| | 7C33-S02 | 2 | PCS | P28 |
| | 7C33-S03 | 4 | PCS | P29 |
| | Z4.8-25 | 4 | PCS | P29 |
| | 7B33-015L | 2 | PCS | P30 |
| | 7B33-015R | 2 | PCS | P30 |
| | 7C33-004 | 4 | PCS | P30 |
| | 7B33-016 | 2 | PCS | P30 |
| | 7C33-005 | 2 | PCS | P30 |
| | | | | |
| | NSST120 | 2.0M | | P21 |
| | 7C33-S01 | 2 | 1980 | P29 |
| | | | | |
| | MCJT002 | 13M | | P20 |
| | | | | |
| | TOOL-001 | 1 | 274 | P1~30 |
| | TOOL-002 | 1 | 80 | P1~30 |
| | TOOL-003A | 1 | 2MM | P26 |
| | TOOL-004A | 1 | 3MM | |
| | TOOL-005 | 1 | 4MM | P26 |
| | TOOL-006 | 1 | 5MM | P2~23 |
| | TOOL-007 | 1 | 6MM | P3~23 |

3040P-TD

| Part | NO. | QTY. | Length(MM) | Page |
|---|---|---|---|---|
| | 41A-Y90 | 2 | 1958 | P19 |
| | 41A-Y91R | 1 | 1958 | P19 |
| | 41X-Y92R | 1 | 776 | P19 |
| | 41X-Y93 | 2 | 776 | P19 |
| | 41A-Y91L | 1 | 1958 | P19 |
| | 41X-Y92L | 1 | 776 | P19 |
| | 41A-Y97-B | 2 | 1918 | P21 |
| | 41A-Y97-A | 2 | 1918 | P21 |
| | 41A-Y97-R | 1 | 1951 | P21 |
| | 41A-Y97-L | 1 | 1951 | P21 |
| | 41A-Y94 | 1 | 1946 | P21 |
| | 41A-Y98-R | 1 | 2000 | P22 |
| | 41A-Y98-L | 1 | 2000 | P22 |
| | 41A-Y99 | 1 | 1410 | P22 |
| | 41A-Y100 | 1 | 1410 | P22 |
| | 41A-Y64 | 1 | 3016 | P23 |
| | 41A-Y17 | 1 | 3120 | P23 |
| | 41A-Y98A-R | 1 | 1923 | P23 |
| | 41A-Y98A-L | 1 | 1923 | P23 |
| | | | | |
| | NSST120 | 2.0M | | P21 |
| | | | | |
| | MCJT002 | 13M | | P20 |

| Part | NO. | QTY. | Length(MM) | Page |
|---|---|---|---|---|
| | W03 | 8 | 30 | P19 |
| | W04 | 16 | PCS | P19 |
| | J12 | 6 | PCS | P19 |
| | Z4.2-13 | 10 | PCS | P21 |
| | T04 | 2 | PCS | P21 |
| | Z4.2-38 | 4 | PCS | P21 |
| | Z3.5-25 | 8 | PCS | P21~24 |
| | M8-35 | 2 | PCS | P22 |
| | Si8-35 | 2 | PCS | P22 |
| | 7B33-020 | 5 | PCS | P22 |
| | Si6-35 | 4 | PCS | P22 |
| | J05 | 12 | PCS | P22 |
| | Si6-16 | 8 | PCS | P22 |
| | PS8-80 | 2 | PCS | P22 |
| | 7C28-004 | 5 | PCS | P23 |
| | Z4.2-50 | 5 | PCS | P23 |
| | Si8-25 | 3 | PCS | P23 |
| | 7C26-031 | 2 | PCS | P23 |
| | T01N | 1 | PCS | P24 |
| | T01A | 1 | PCS | P24 |
| | J02 | 2 | PCS | P24 |
| | 7B33-049 | 1 | PCS | P24 |
| | 7B33-050 | 1 | PCS | P24 |
| | 7B33-051 | 1 | PCS | P24 |
| | 7B33-052 | 1 | PCS | P24 |
| | M4-40 | 2 | PCS | P24 |
| | Mi4-17 | 2 | PCS | P24 |
| | Za4.2-13 | 8 | PCS | P24 |

| | Part | NO. | QTY. | Length(MM) | Page | Code |
|---|---|---|---|---|---|---|
| 3701P-TS-4 | | 41A-S11-4R | 1 | 1395 | P2 | A010 |
| | | 41A-S11-4L | 1 | 1395 | P2 | A011 |
| | | 41A-S11-4AR | 1 | 1256 | P2 | A012 |
| | | 41A-S11-4AL | 1 | 1256 | P2 | A013 |
| | | 41A-S15-4R | 1 | 1395 | P12 | A014 |
| | | 41A-S15-4L | 1 | 1395 | P12 | A015 |
| | | 41X-Y62-4C | 2 | 603 | P27 | A016 |

| | Part | NO. | QTY. | Length(MM) | Page | Code |
|---|---|---|---|---|---|---|
| 3701P-TS-5 | | 41A-S11-5R | 1 | 1895 | P2 | A010 |
| | | 41A-S11-5L | 1 | 1895 | P2 | A011 |
| | | 41A-S11-5AR | 1 | 1757 | P2 | A012 |
| | | 41A-S11-5AL | 1 | 1757 | P2 | A013 |
| | | 41A-S15-5R | 1 | 1895 | P12 | A014 |
| | | 41A-S15-5L | 1 | 1895 | P12 | A015 |
| | | 41X-Y62-5C | 2 | 1103 | P27 | A016 |

| | Part | NO. | QTY. | Length(MM) | Page | Code |
|---|---|---|---|---|---|---|
| 3701P-TS-6 | | 41A-S11-6R | 1 | 2396 | P2 | A010 |
| | | 41A-S11-6L | 1 | 2396 | P2 | A011 |
| | | 41A-S11-6AR | 1 | 2257 | P2 | A012 |
| | | 41A-S11-6AL | 1 | 2257 | P2 | A013 |
| | | 41A-S15-6R | 1 | 2396 | P12 | A014 |
| | | 41A-S15-6L | 1 | 2396 | P12 | A015 |
| | | 41X-Y62-6C | 2 | 1604 | P27 | A016 |

| | Part | NO. | QTY. | Length(MM) | Page |
|---|---|---|---|---|---|
| 3701P-TS-5F | | 51A-Y12 | 1 | 3990 | P2 |
| | | 50A-Y12-A | 1 | 3774 | P2 |
| | | 51X-Y14 | 1 | 3990 | P12 |
| | | 51X-Y60-A | 1 | 3774 | P27 |

| | Part | NO. | QTY. | Length(MM) | Page |
|---|---|---|---|---|---|
| 3701P-TS-5G | | 51A-Y13R | 1 | 1270 | P2 |
| | | 51A-Y13L | 1 | 1270 | P2 |
| | | 51A-Y13R-A | 1 | 1161 | P2 |
| | | 51A-Y13L-A | 1 | 1161 | P2 |
| | | 51A-Y14R | 1 | 1270 | P12 |
| | | 51A-Y14L | 1 | 1270 | P12 |
| | | 41X-Y61-A | 1 | 3023 | P27 |
| | | 51X-Y60-B | 2 | 375 | P27 |

| | Part | NO. | QTY. | Length(MM) | Page |
|---|---|---|---|---|---|
| 3701P-TS-Y30 | | 41A-Y30 | 1 | 1335 | P5 |
| | | 41A-Y01 | 1 | 1335 | P12 |
| | | 7B33-005 | 2 | PCS | P4 |
| | | M8-10 | 2 | PCS | P4 |
| | | Ma8-20 | 4 | PCS | P4 |
| | | M8 | 4 | PCS | P4 |
| | | 7B33-020 | 4 | PCS | P5 |
| | | Si8-16 | 4 | PCS | P5 |
| | | J12 | 3 | PCS | P11 |

| CTN NO. | QTY. | | |
|---|---|---|---|
| | 3711 | 3712 | 3723 |
| 3040P-TD | 2 | 2 | 2 |
| 3701P-TS-4 | 2 | 0 | 0 |
| 3701P-TS-5 | 0 | 2 | 0 |
| 3701P-TS-6 | 0 | 0 | 2 |
| 3701P-TS-5F | 1 | 1 | 1 |
| 3701P-TS-5G | 1 | 1 | 1 |
| 3701P-TS-Y30 | 2 | 0 | 2 |

| Part | NO. | QTY. | | | Length (MM) | Page |
|---|---|---|---|---|---|---|
| | | 3711 | 3712 | 3713 | | |
| | 730×1369 | 7 | 11 | 7 | 1369 | P11 |
| | 354×1369 | 2 | 2 | 2 | 1369 | P11 |
| | 980×1369 | 4 | 4 | 8 | 1369 | P11 |
| | 228×1369 | 4 | 0 | 4 | 1369 | P11 |
| | 1075×643 | 4 | 4 | 4 | 1075 | P14~15 |
| | 730×1076 | 4 | 4 | 4 | 1076 | P14~15 |
| | 980×2234 | 6 | 6 | 8 | 2234 | P17 |
| | 980×1343 | 2 | 4 | 4 | 1343 | P17 |
| | 664×1844 | 6 | 6 | 6 | 1844 | P19 |
| | 1032×831 | 2 | 4 | 4 | 1032 | P25 |

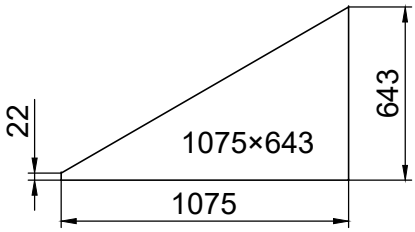


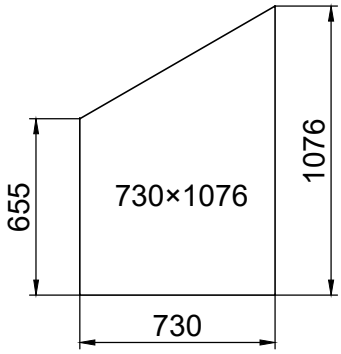


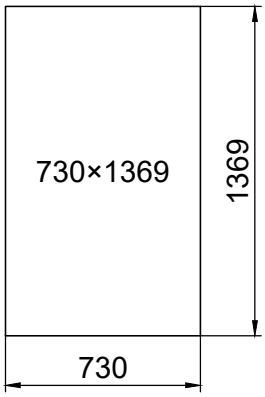


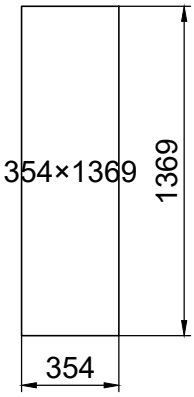


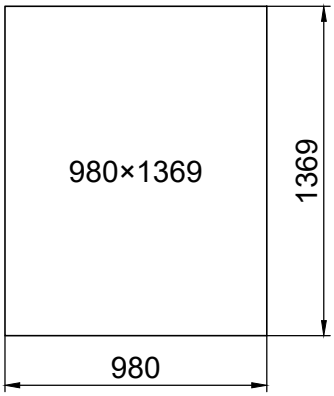


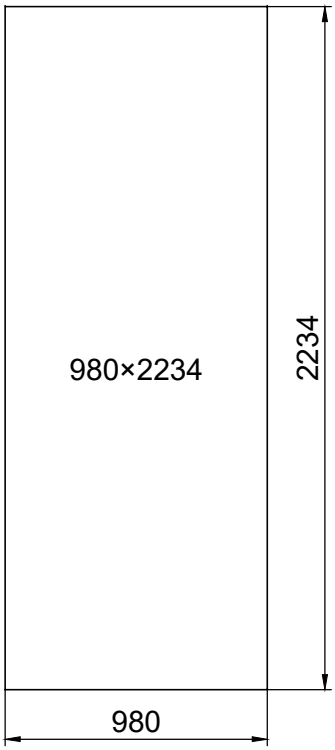


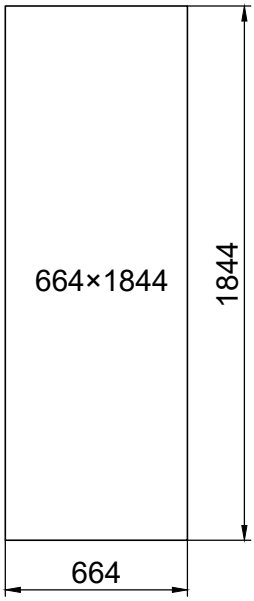


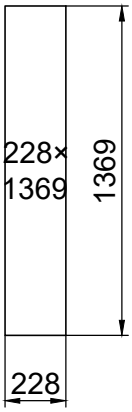


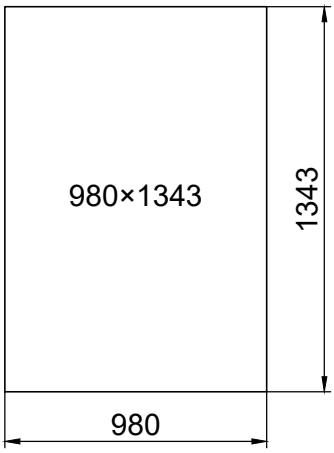


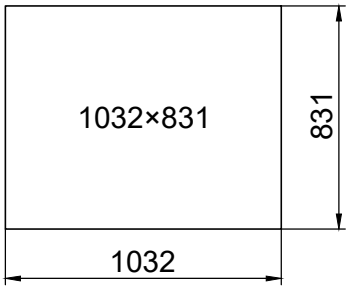

| Code | Length(MM) | | |
|---|---|---|---|
| | 3711 | 3712 | 3713 |
| L1 | 4206 | 5207 | 6208 |
| L2 | 1372 | 1873 | 2373 |

Sealing should be done to prevent frost from destroying the wall. The sealant between the wall and foundation of the greenroom is provided and handled by customers themselves.

Tätning bör göras för att muren ej skall frostsprängas. Tätning mellan mur och sockel står kunden själv för.

Tætningen bør gøres for at forhindre frostsprængninger i muren. Tætningen mellem mur og aluminiumprofil står kunden selv for

En tetning bør lages for å hindre frostsprengning av muren. Tetning mellom mur og sokkel ordnes av kunden selv

Tiivistys täytyy tehdä, jotta muuri ei hajoa pakkasella. Tiiviste muurin ja sokkelin välissä täytyy asiakkaan hoitaa itse

Die Abdichtung sollte erfolgen, um zu verhindern, dass der Frost die Wand zerstört. Die Abdichtung zwischen der Wand und dem Fundament des Greenrooms wird vom Kunden selbst besorgt und durchgeführt.

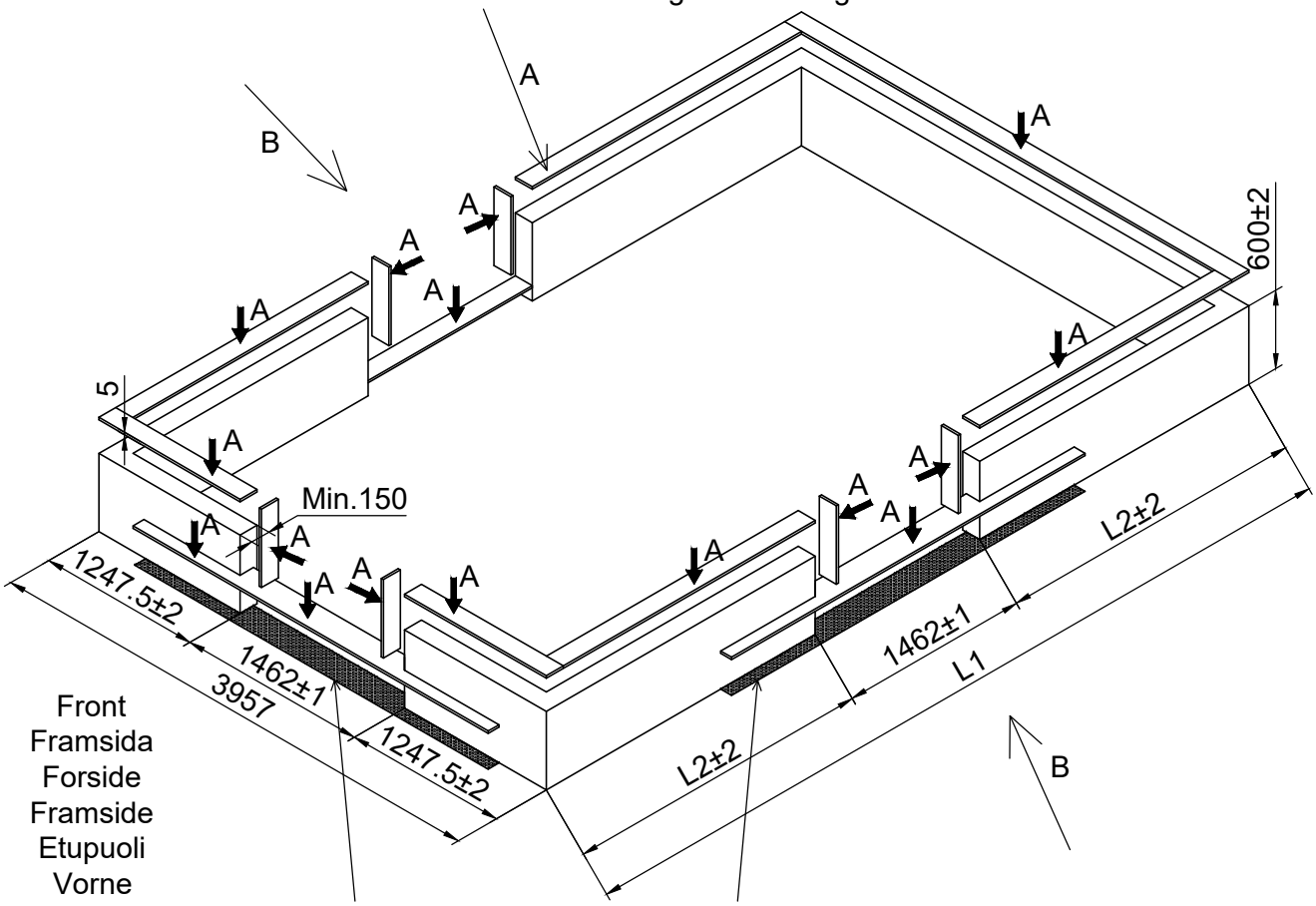


Make sure the floor below the doors frame should be flat and solid.
Se till att underlaget under dörrramen är plan och på solid grund.
Sørg for, at underlaget under dørkarmen er plan og på fast grund.
Sørg for at underlaget under dørterskelen er slett og på solid fundament.
Tarkista, että maa ovikarmin alla on sileä ja tasainen.
Achten Sie darauf, dass der Boden unter dem Türrahmen eben und fest ist.

| Part | Product | NO. | Length(MM) | CTN NO. | QTY. | Code |
|---|---|---|---|---|---|---|
| | 3711 | 41A-S11-4R | 1395 | 3701P-TS-4 | 2 | A010 |
| | 3712 | 41A-S11-5R | 1895 | 3701P-TS-5 | | |
| | 3713 | 41A-S11-6R | 2396 | 3701P-TS-6 | | |
| | 3711 | 41A-S11-4L | 1395 | 3701P-TS-4 | 2 | A011 |
| | 3712 | 41A-S11-5L | 1895 | 3701P-TS-5 | | |
| | 3713 | 41A-S11-6L | 2396 | 3701P-TS-6 | | |

| Part | NO. | QTY. | Length(MM) | CTN NO. |
|---|---|---|---|---|
| | 51A-Y12 | 1 | 3990 | 3701P-TS-5F |
| | 51A-Y13R | 1 | 1270 | 3701P-TS-5G |
| | 51A-Y13L | 1 | 1270 | 3701P-TS-5G |

| Part | NO. | QTY. | Length(MM) |
|---|---|---|---|
| | 7B33-001 | 4 | PCS |
| | W03 | 4 | 30 |

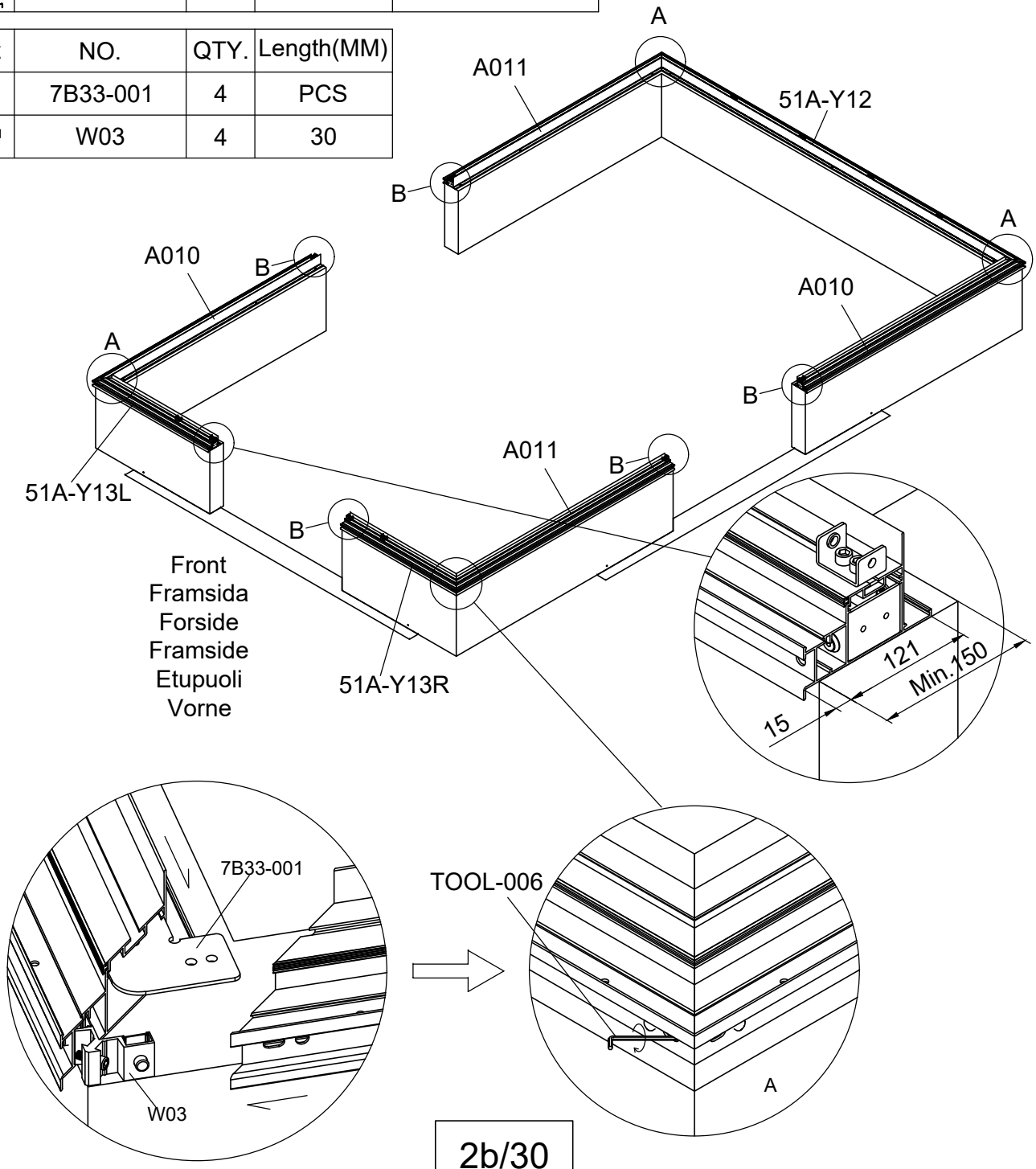

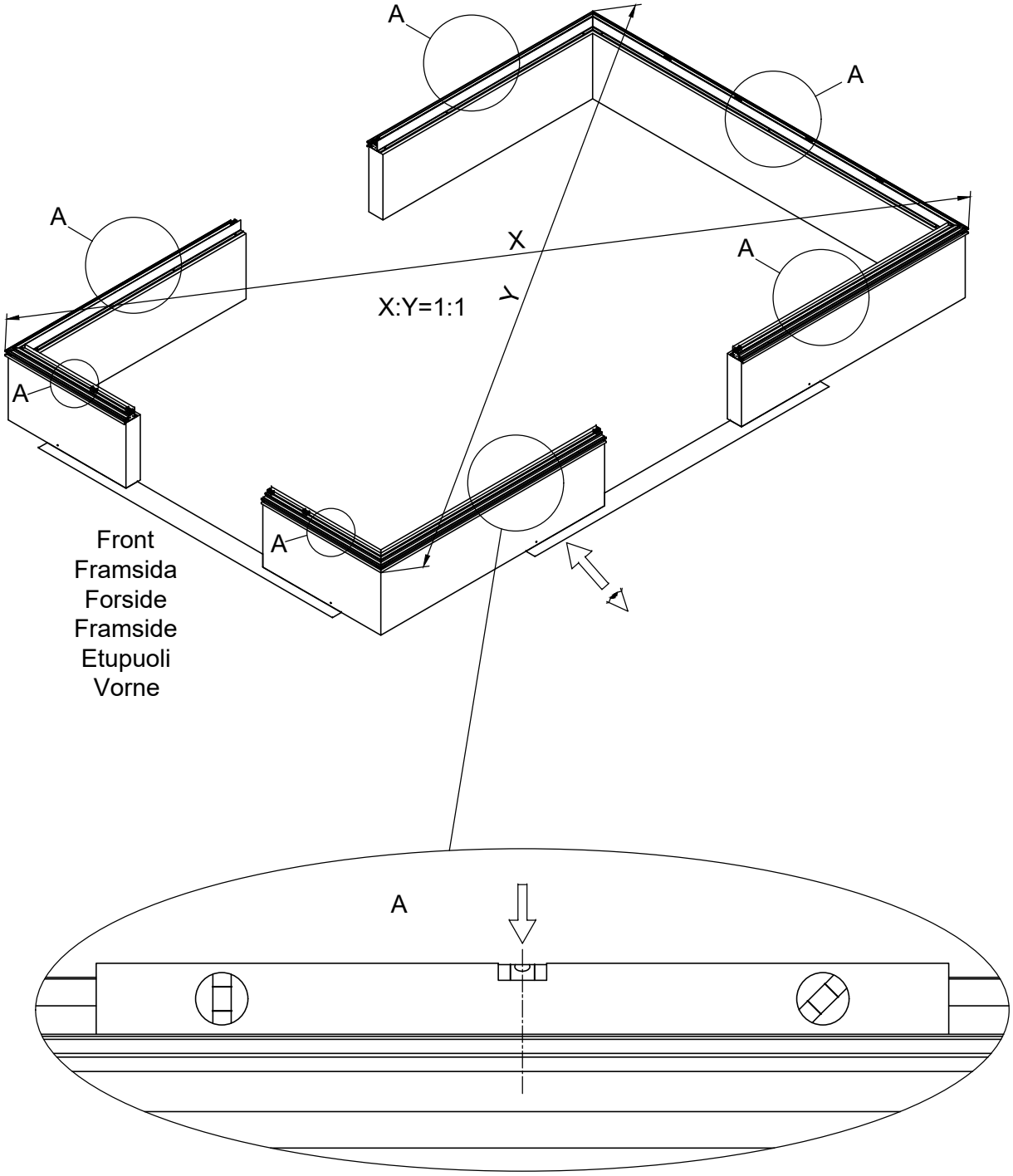
A
A
A
A
A
A
X
Y
X:Y=1:1
Front
Framsida
Forside
Framside
Etupuoli
Vorne
A

| Part | NO. | QTY. | Length(MM) |
|---|---|---|---|
| | PS8-80 | 18 | PCS |

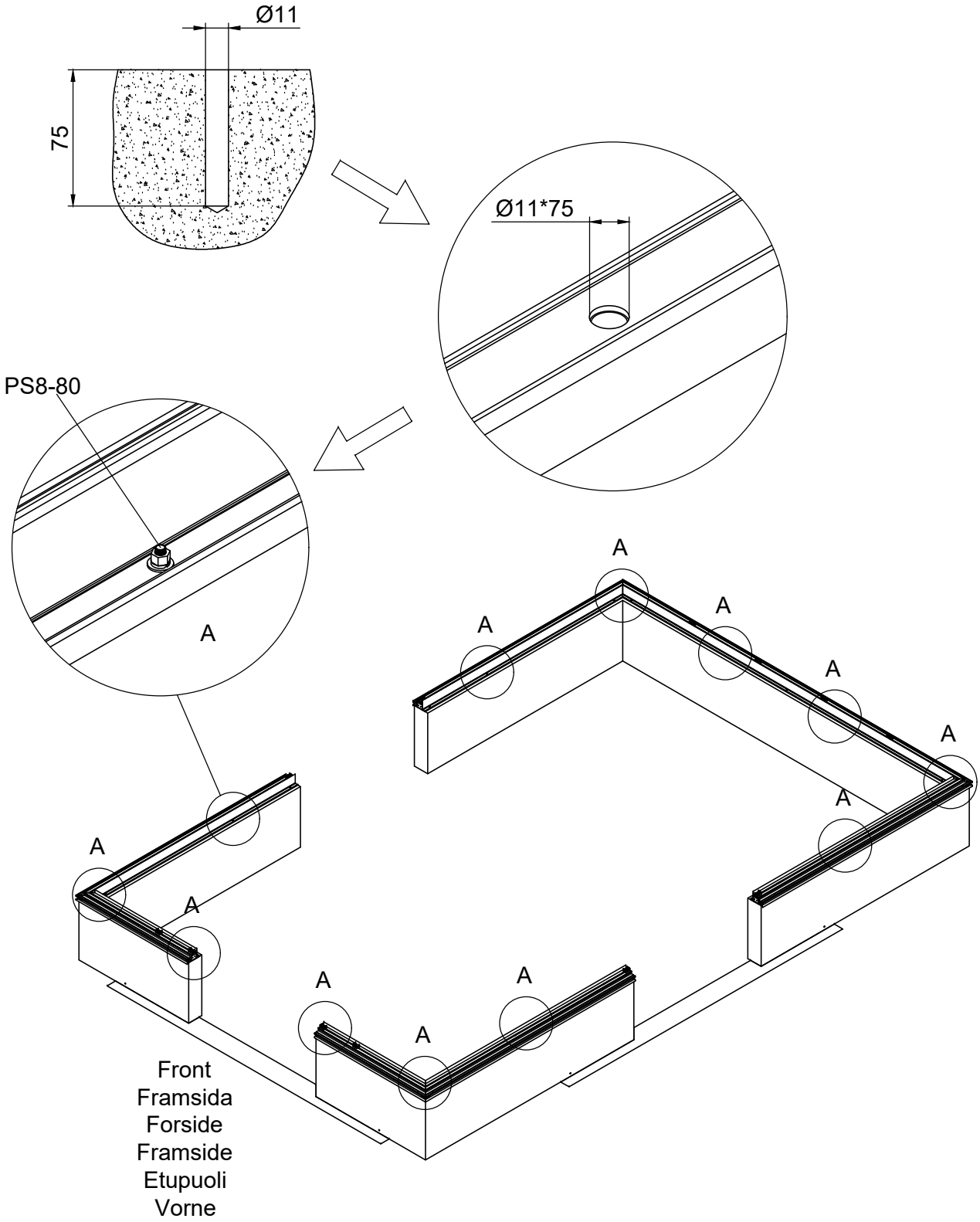

| Part | Product | NO. | Length(MM) | CTN NO. | QTY. | Code |
|---|---|---|---|---|---|---|
| | 3711 | 41A-S11-4R | 1256 | 3701P-TS-4 | 2 | A012 |
| | 3712 | 41A-S11-5R | 1757 | 3701P-TS-5 | | |
| | 3713 | 41A-S11-6R | 2257 | 3701P-TS-6 | | |
| | 3711 | 41A-S11-4L | 1256 | 3701P-TS-4 | 2 | A013 |
| | 3712 | 41A-S11-5L | 1757 | 3701P-TS-5 | | |
| | 3713 | 41A-S11-6L | 2257 | 3701P-TS-6 | | |

| Part | NO. | QTY. | Length(MM) | CTN NO. |
|---|---|---|---|---|
| | 50A-Y12-A | 1 | 3774 | 3701P-TS-5F |
| | 51A-Y13R-A | 1 | 1161 | 3701P-TS-5G |
| | 51A-Y13L-A | 1 | 1161 | 3701P-TS-5G |

| Part | NO. | QTY. | Length(MM) |
|---|---|---|---|
| | J09 | 8 | PCS |

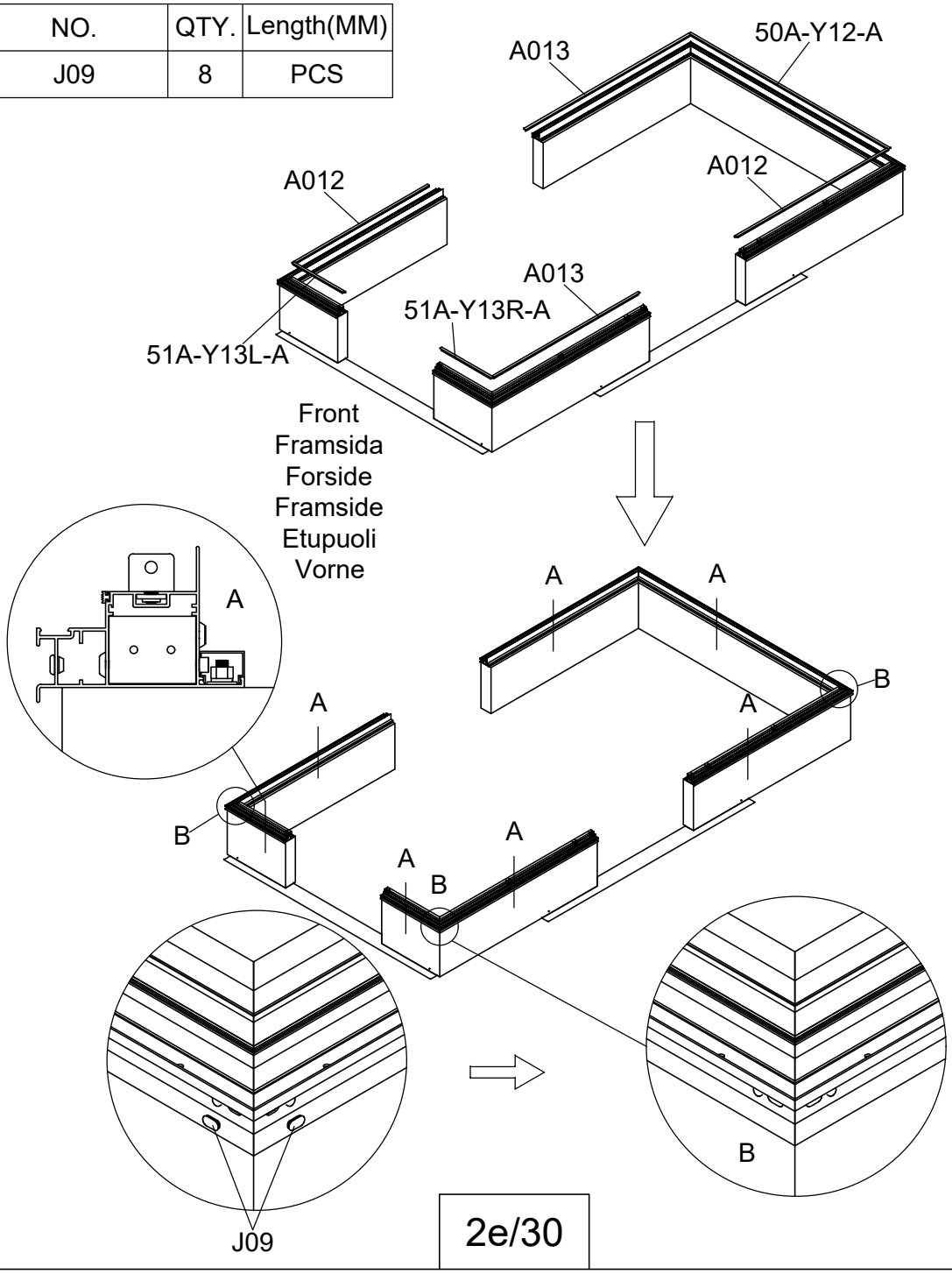

| Part | NO. | QTY. | Length(MM) |
|---|---|---|---|
| | 7B33-002 | 4 | PCS |
| | 7B33-003 | 4 | PCS |
| | M8-20 | 16 | PCS |
| | J08 | 1 | PCS |

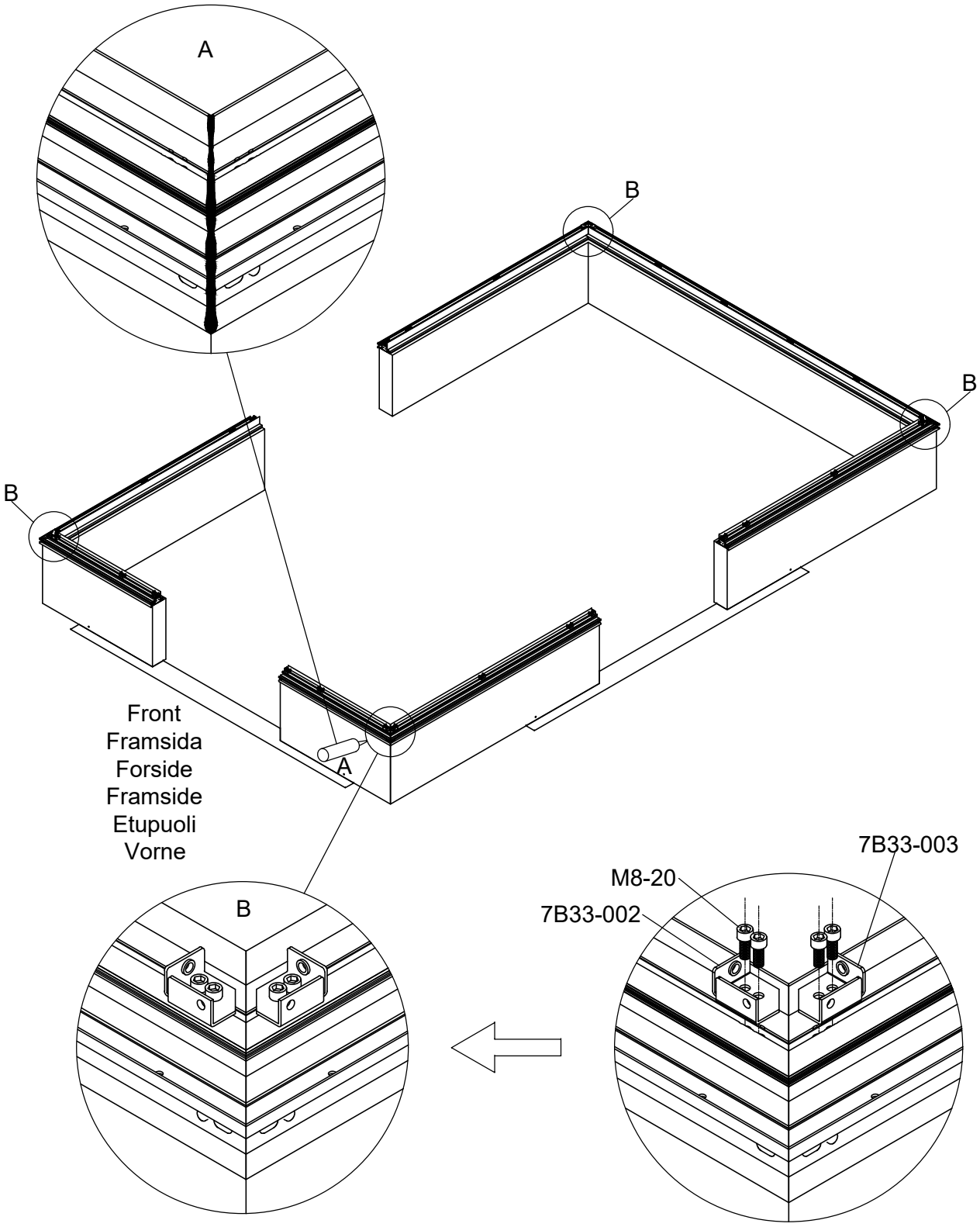

| Part | NO. | QTY. | Length(MM) |
|---|---|---|---|
| | 41A-Y20 | 4 | 1336 |
| | Si8-16 | 8 | PCS |
| | 7B33-020 | 8 | PCS |
| | M8-20 | 8 | PCS |
| | 7C33-001 | 8 | PCS |

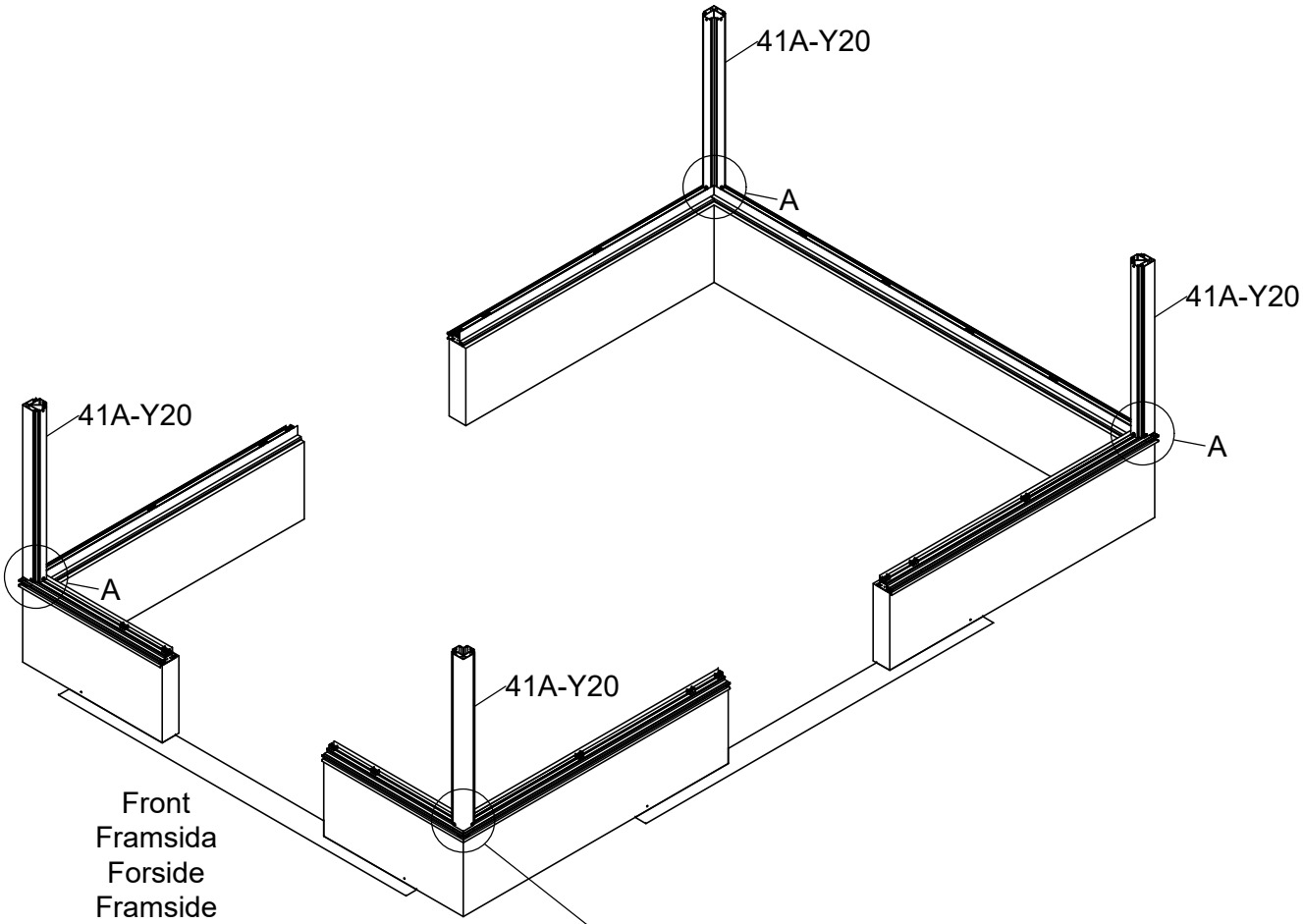


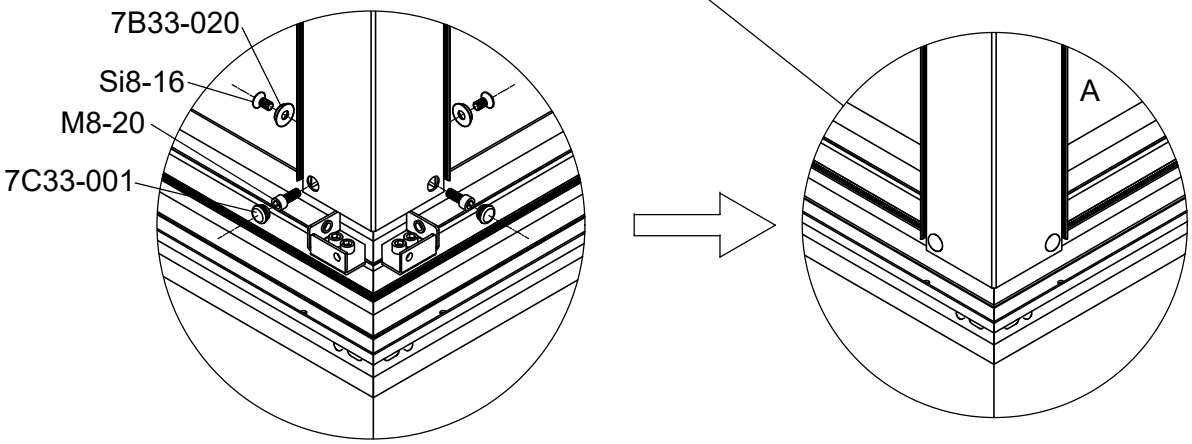

| Part | NO. | QTY. | Length(MM) |
|---|---|---|---|
| | 51X-Y61 | 1 | 3774 |
| | 51X-Y60 | 1 | 3774 |
| | Si8-16 | 4 | PCS |
| | 7B33-020 | 4 | PCS |

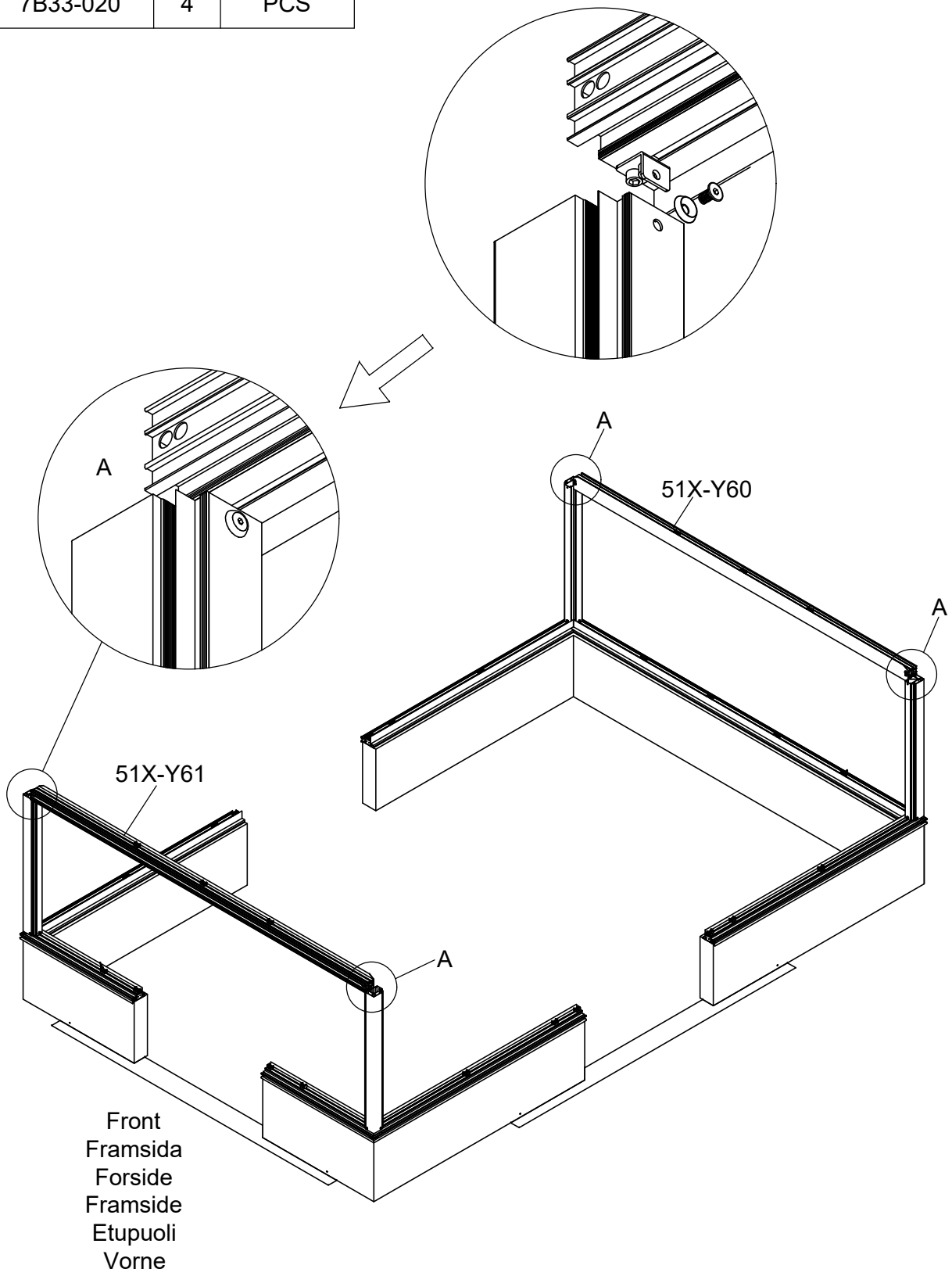

| Part | NO. | QTY. | Length(MM) |
|---|---|---|---|
| | Si8-16 | 4 | PCS |
| | 7B33-020 | 4 | PCS |

| Part | Product | NO. | Length(MM) | QTY. | Code |
|---|---|---|---|---|---|
| | 3711 | 41X-Y62-4 | 4228 | 2 | A003 |
| | 3712 | 41X-Y62-5 | 5229 | | |
| | 3713 | 41X-Y62-6 | 6230 | | |

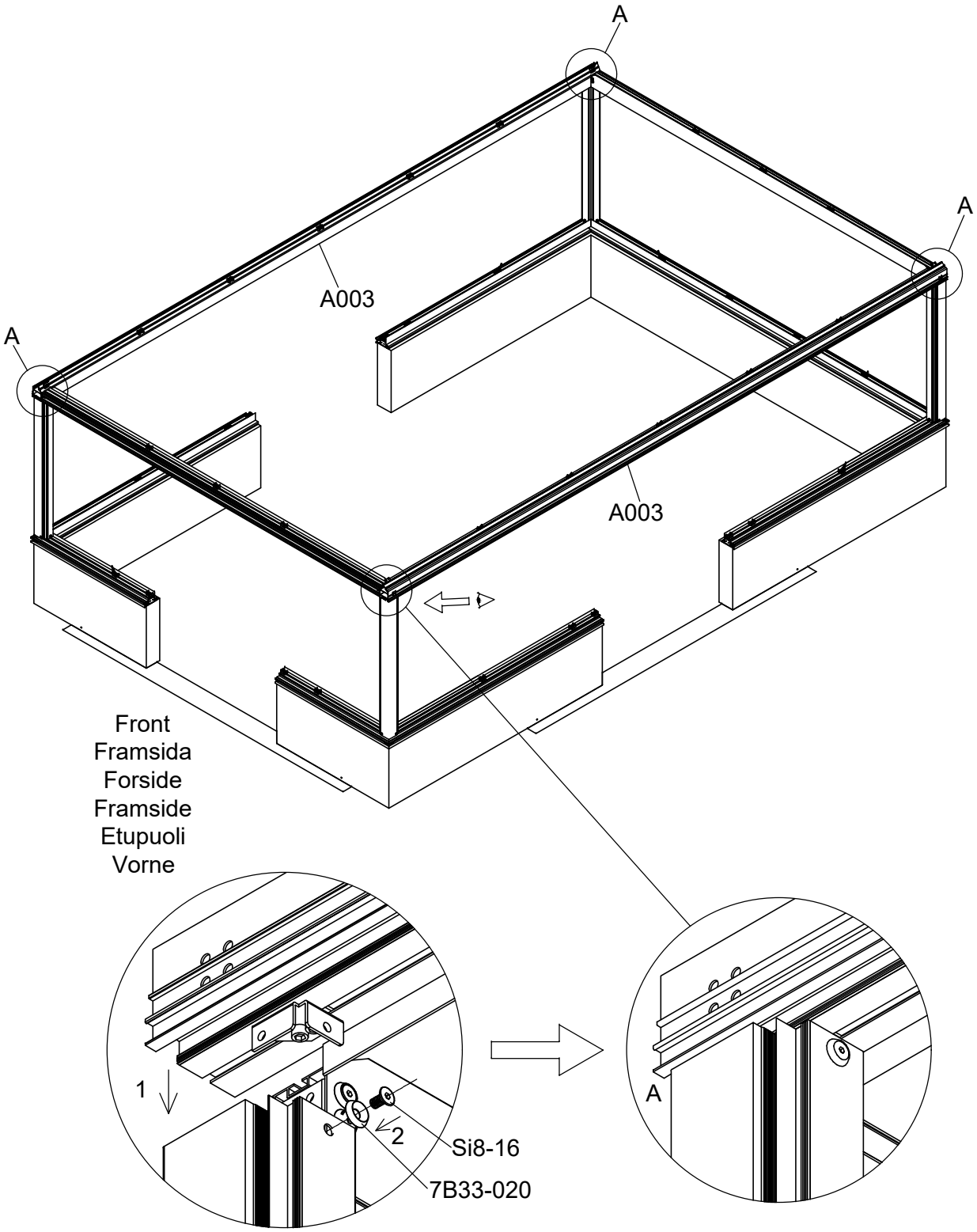

| Part | NO. | QTY. | Length(MM) |
|---|---|---|---|
| | 7B33-008 | 4 | PCS |
| | M8-20 | 16 | PCS |

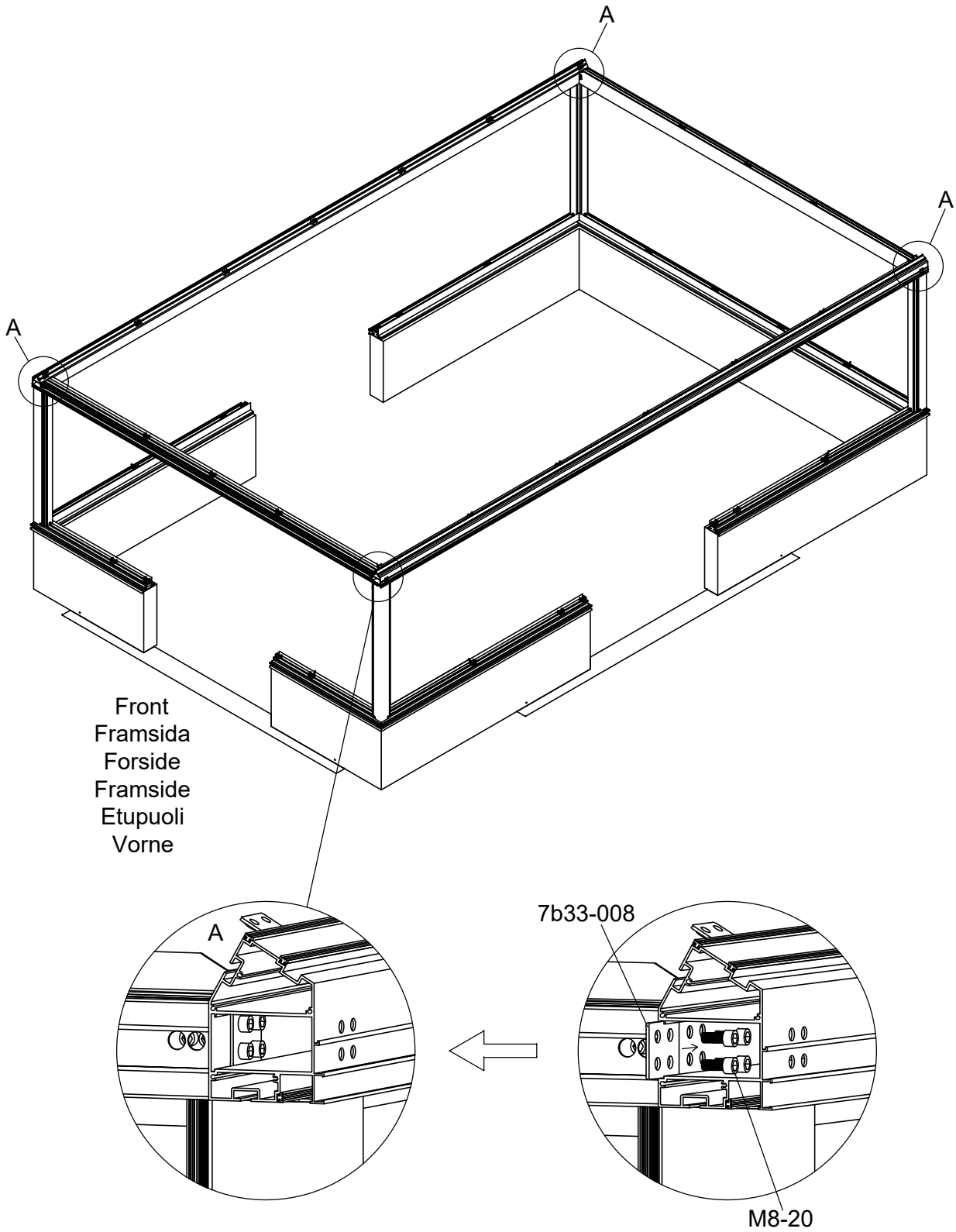

| Part | NO. | QTY. | | | Length(MM) | CTN NO. |
|---|---|---|---|---|---|---|
| | | 3711 | 3712 | 3713 | | |
| | 7B33-005 | 2 | 0 | 2 | PCS | 3701P-TS-Y30 |
| | M8-10 | 4 | 0 | 4 | PCS | 3701P-TS-Y30 |

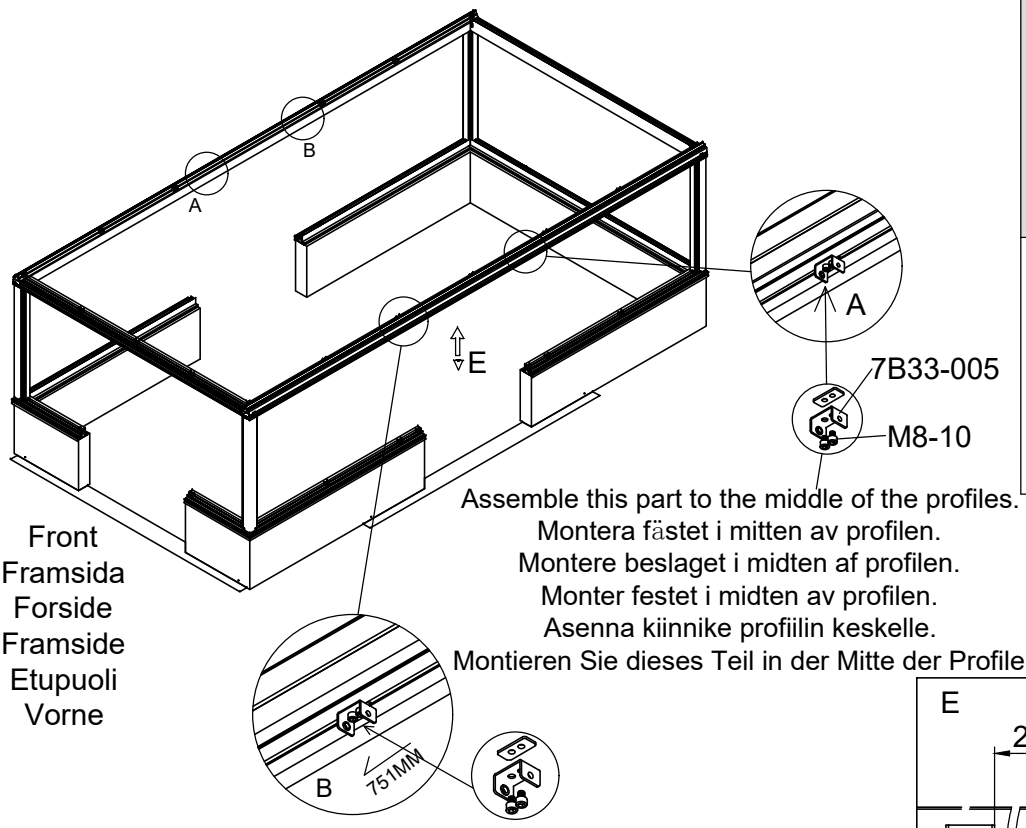


Front
Framsida
Forside
Framside
Etupuoli
Vorne

Assemble this part to the middle of the profiles.
Montera fästet i mitten av profilen.
Montere beslaget i midten af profilen.
Monter festet i midten av profilen.
Asenna kiinnike profiilin keskelle.
Montieren Sie dieses Teil in der Mitte der Profile

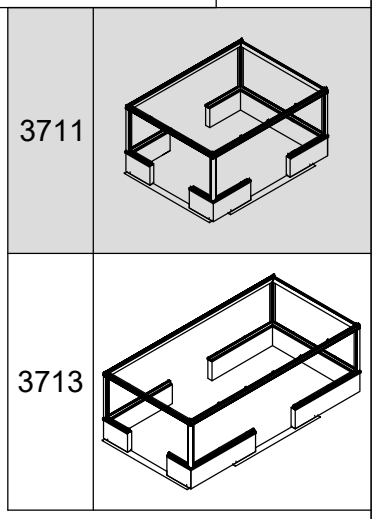


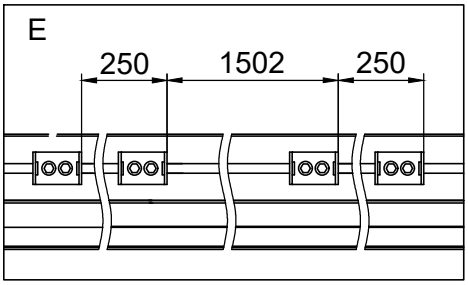


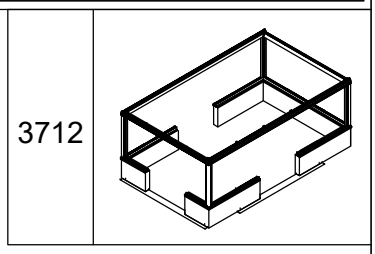


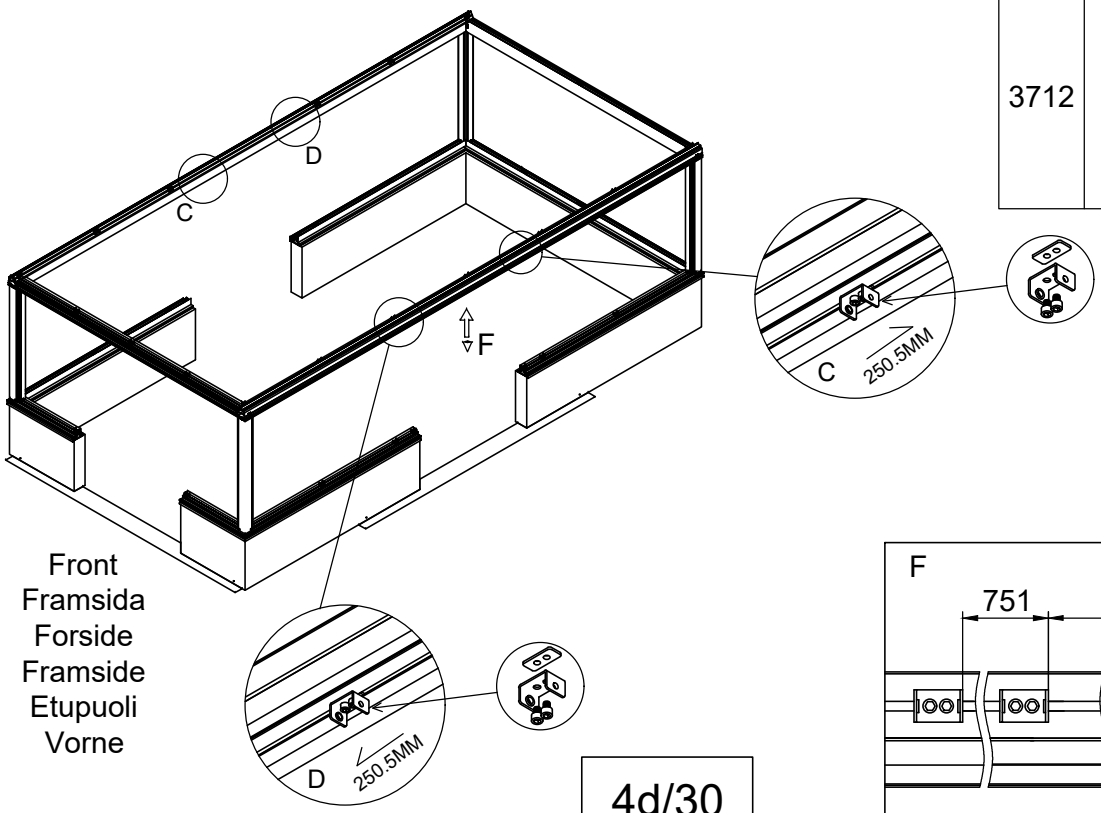


Front
Framsida
Forside
Framside
Etupuoli
Vorne

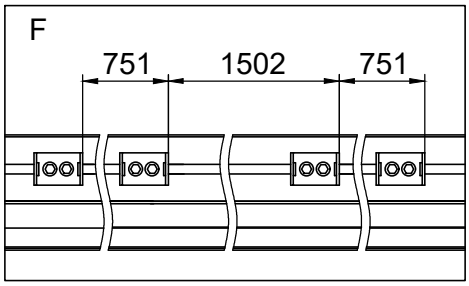

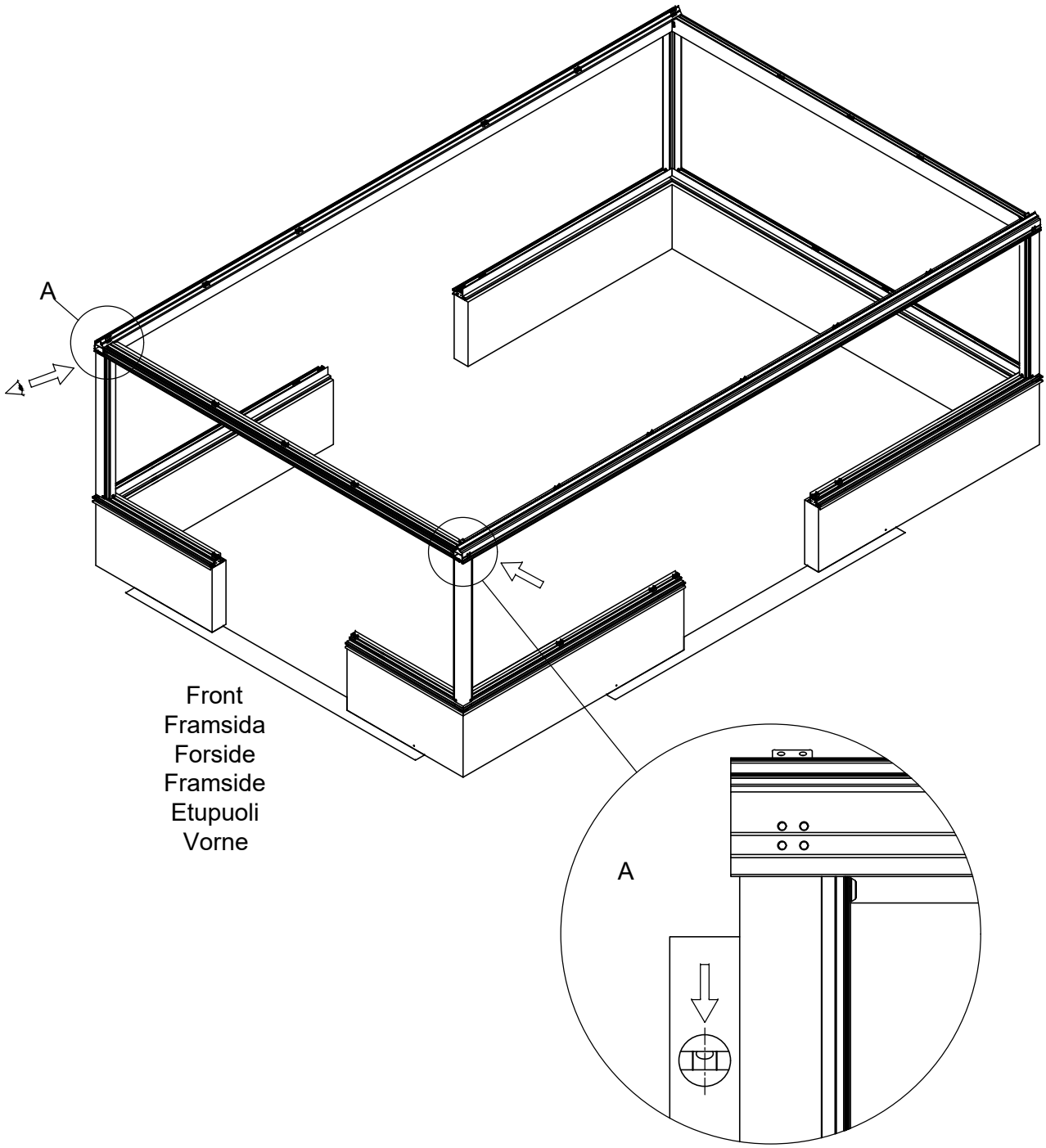
A
Front
Framsida
Forside
Framside
Etupuoli
Vorne
A

| Part | NO. | QTY. | | | | | Length(MM) |
|---|---|---|---|---|---|---|---|
| | | 3711 | | 3712 | 3713 | | |
| | | 3711 | 3701P-TS-Y30 | | 3713 | 3701P-TS-Y30 | |
| | 41A-Y30 | 14 | 2 | 16 | 18 | 2 | 1335 |
| | Si8-16 | 44 | 8 | 52 | 60 | 8 | PCS |
| | 7B33-020 | 44 | 8 | 52 | 60 | 8 | PCS |

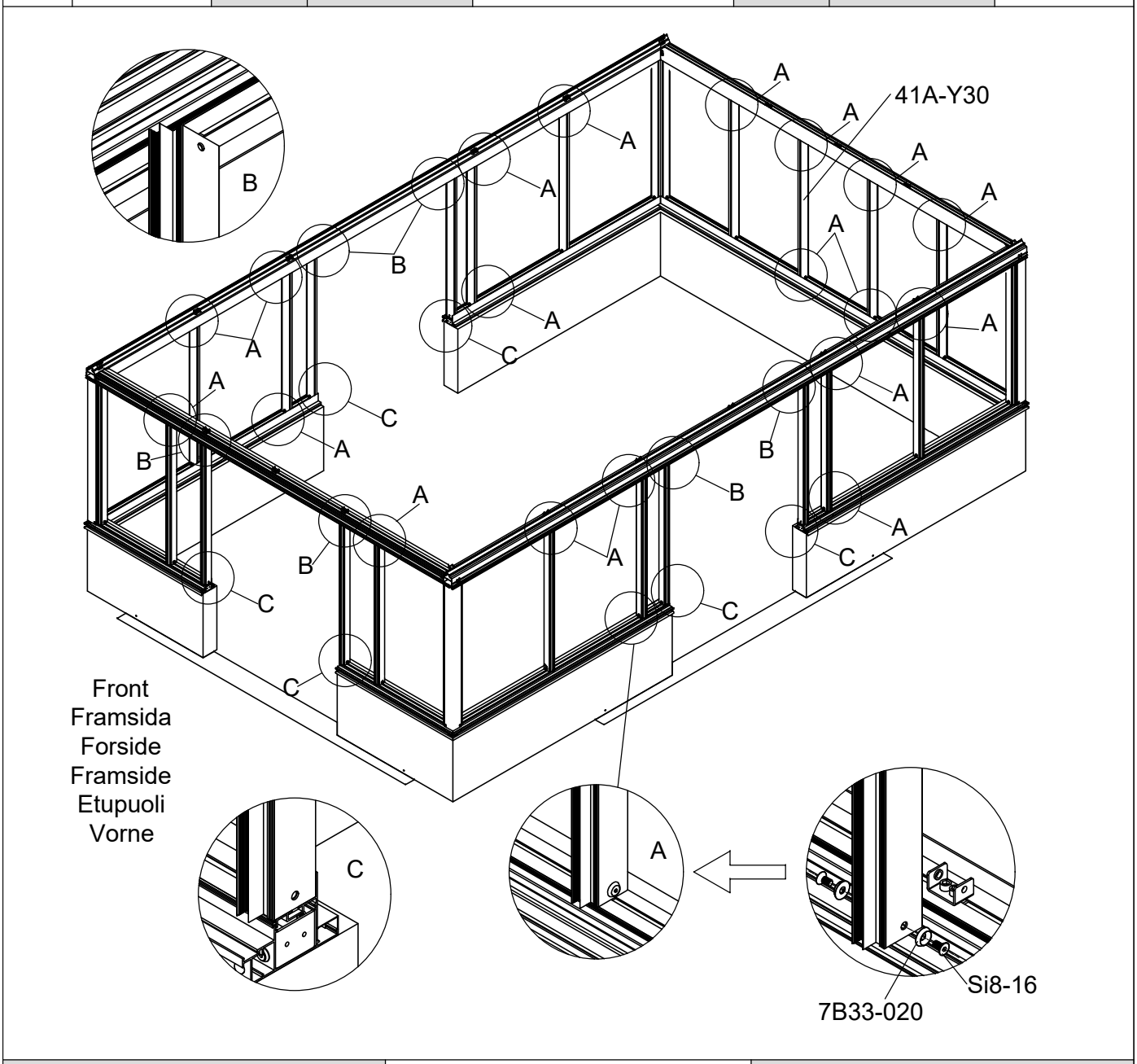


| 3711 | 3712 | 3713 |
|---|---|---|
| 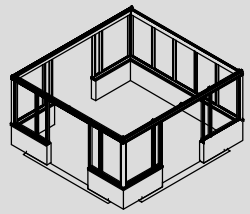 | 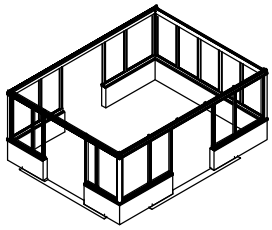 | 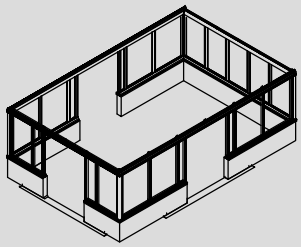 |

| Part | NO. | QTY. | Length(MM) |
|---|---|---|---|
| | 51X-Y32 | 2 | 1074 |
| | Si8-16 | 4 | PCS |
| | 7B33-020 | 4 | PCS |

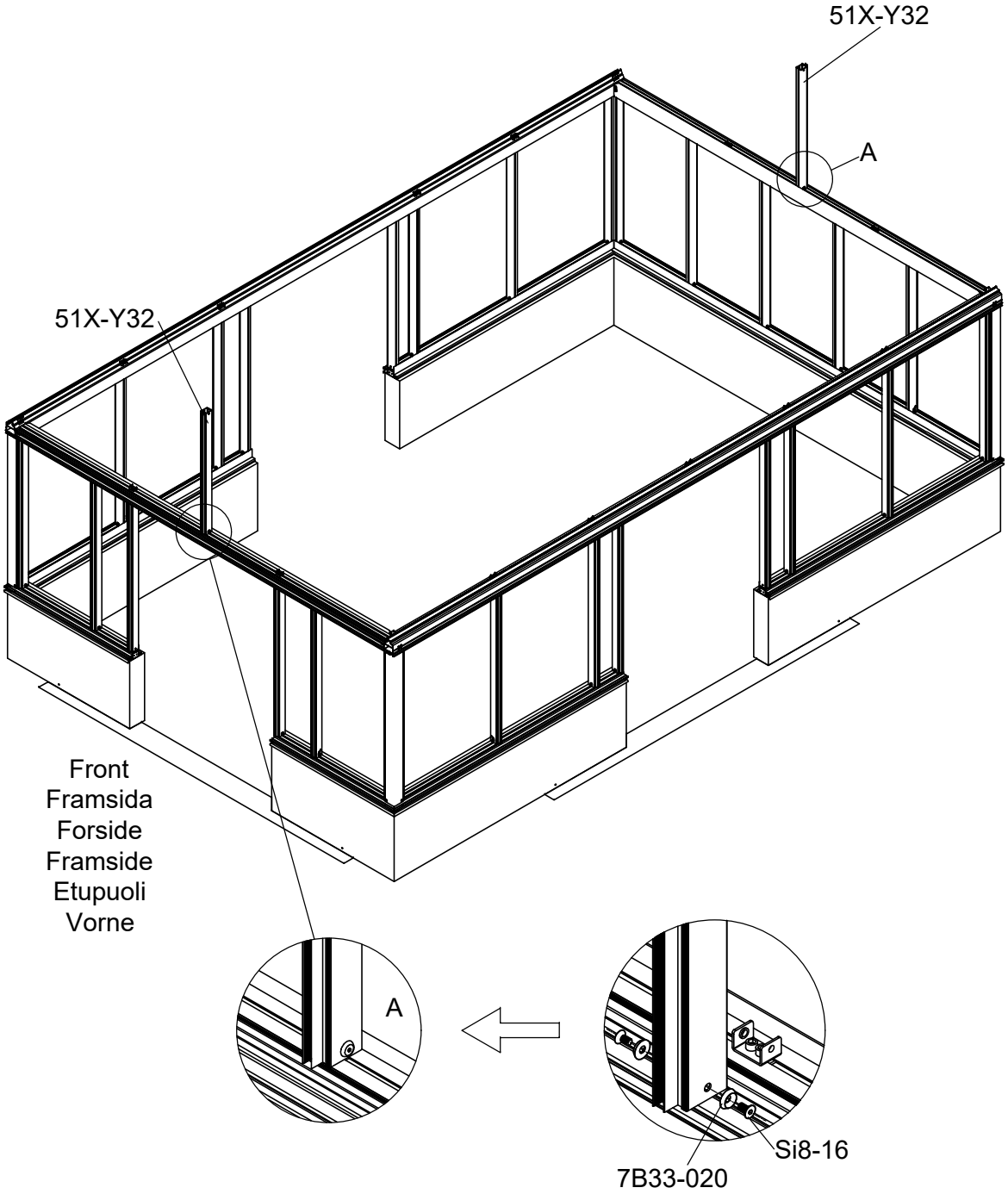

| Part | NO. | QTY. | Length(MM) |
|---|---|---|---|
| | M8-20 | 4 | PCS |

| Part | Product | NO. | Length(MM) | QTY. | Code |
|---|---|---|---|---|---|
| | 3711 | 41X-Y63-4 | 4207 | 1 | A004 |
| | 3712 | 41X-Y63-5 | 5208 | | |
| | 3713 | 41X-Y63-6 | 6209 | | |

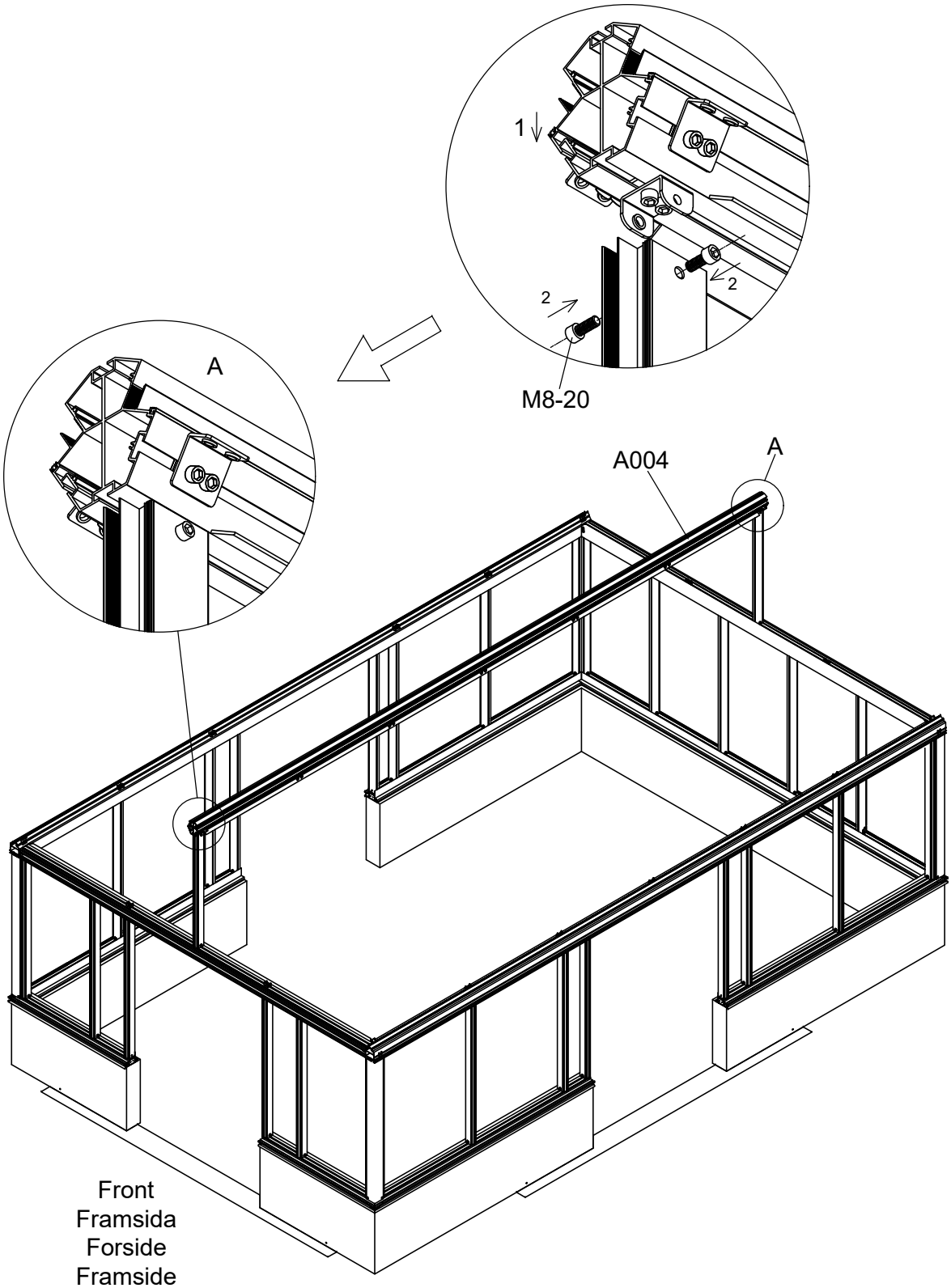

| Part | NO. | QTY. | Length(MM) |
|---|---|---|---|
| | 51X-Y21 | 2 | 2148 |
| | 51X-Y22 | 2 | 2148 |
| | Si8-16 | 16 | PCS |
| | 7B33-020 | 16 | PCS |

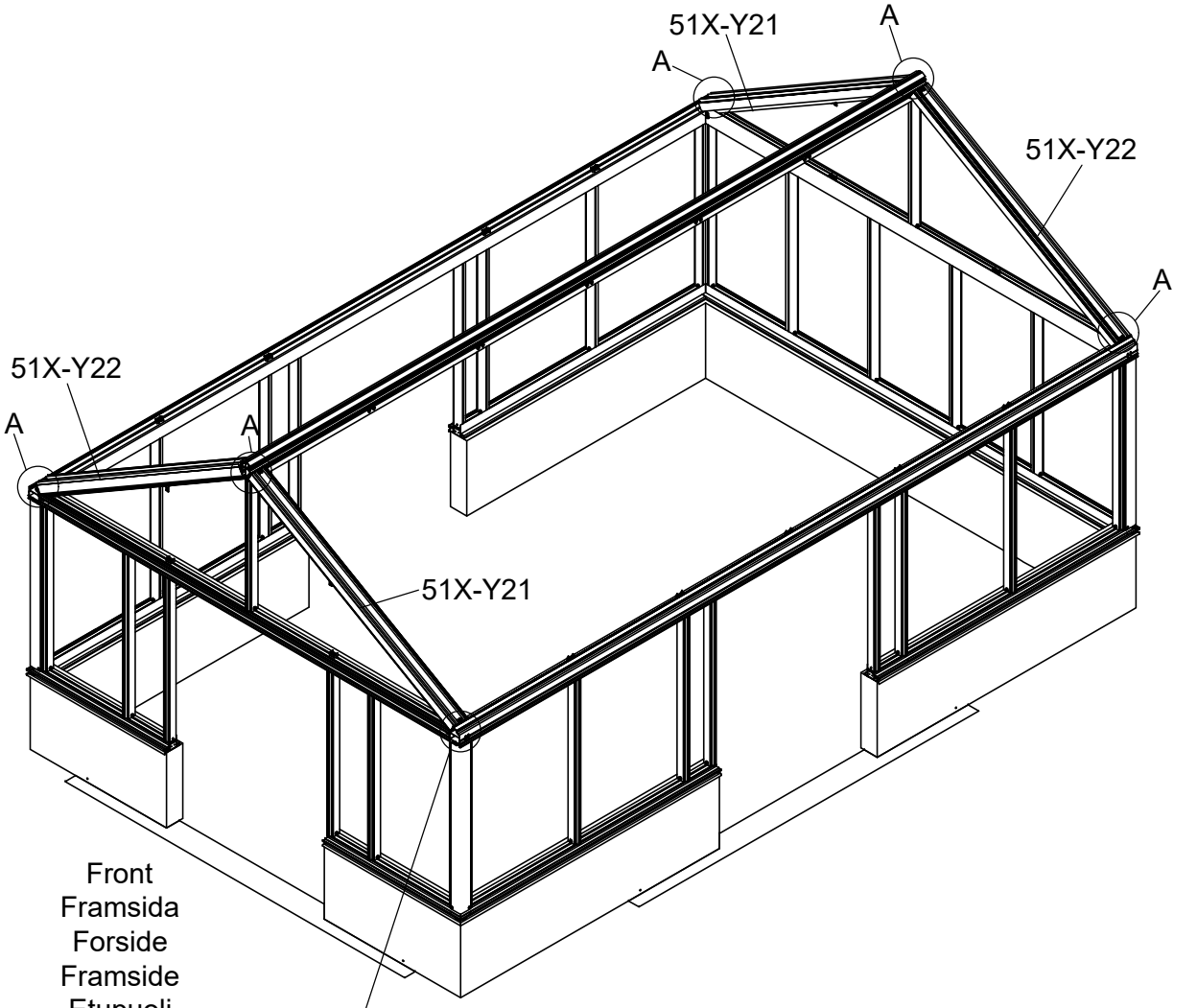


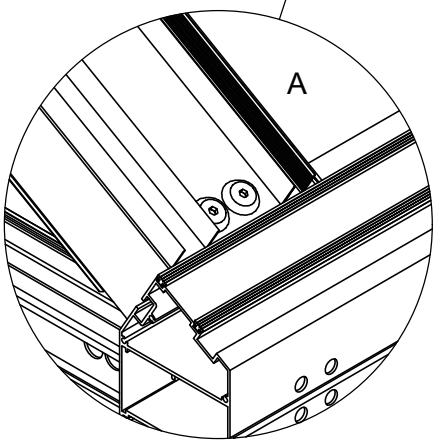


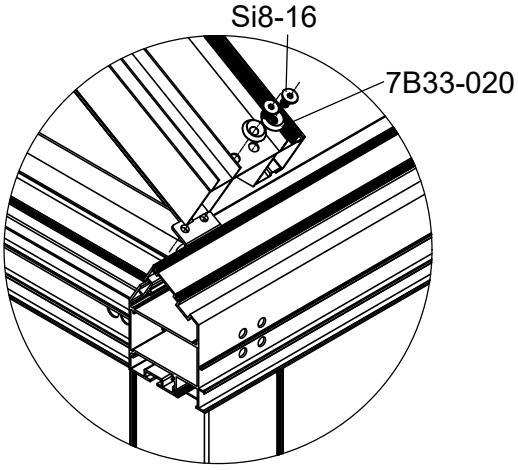

| Part | NO. | QTY. | Length(MM) |
|---|---|---|---|
| | 51X-Y31R | 2 | 629 |
| | 51X-Y31L | 2 | 629 |
| | M8-20 | 8 | PCS |
| | Si8-16 | 8 | PCS |
| | 7B33-020 | 8 | PCS |

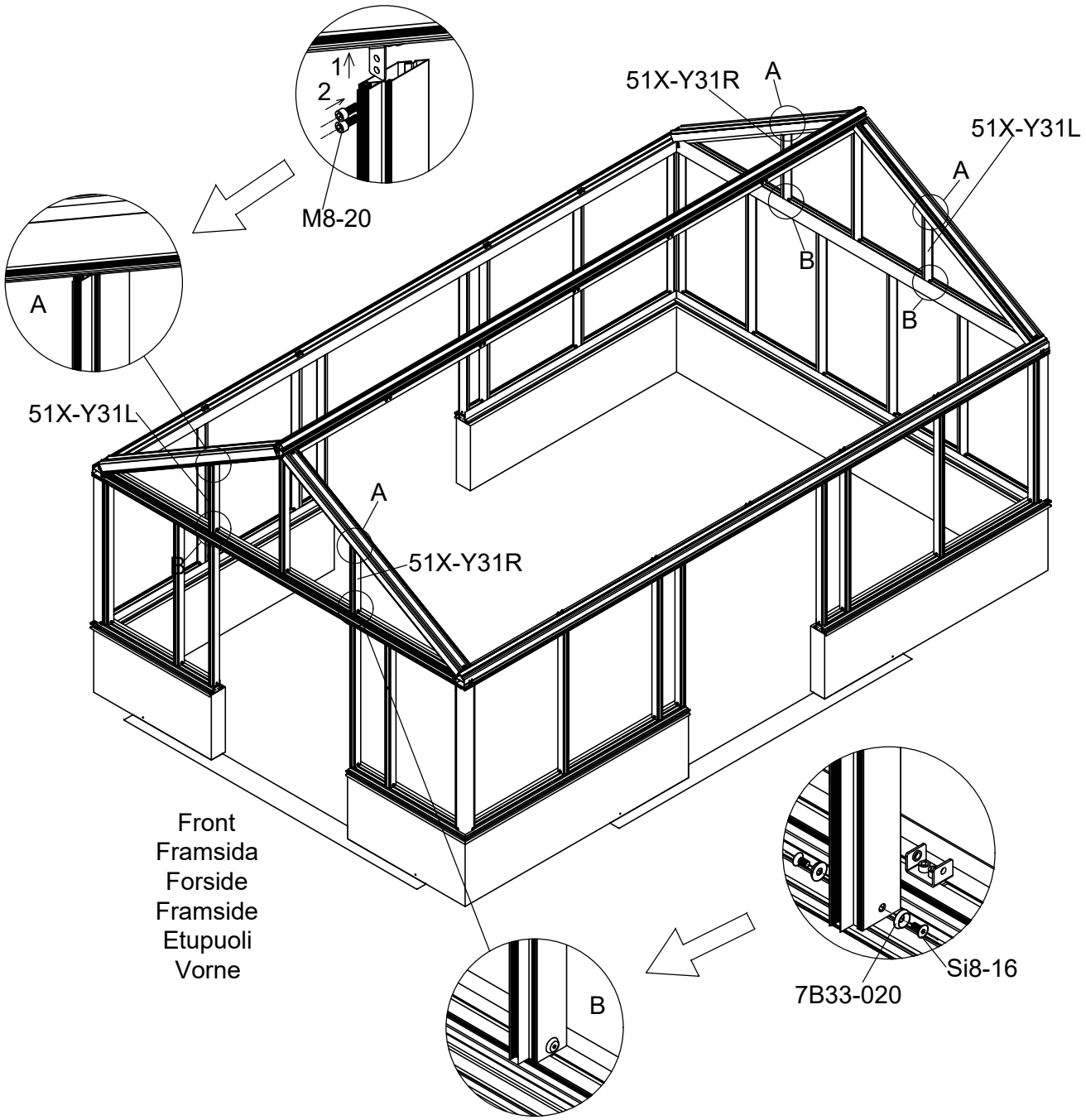

| Part | NO. | QTY. | | | Length(MM) |
|---|---|---|---|---|---|
| | | 3711 | 3712 | 3713 | |
| | 51X-Y33R | 2 | 4 | 4 | 2148 |
| | 51X-Y33L | 2 | 4 | 4 | 2148 |
| | 41X-Y34 | 2 | 4 | 4 | 951 |
| | M8-20 | 8 | 16 | 16 | PCS |
| | 7C33-001 | 8 | 16 | 16 | PCS |

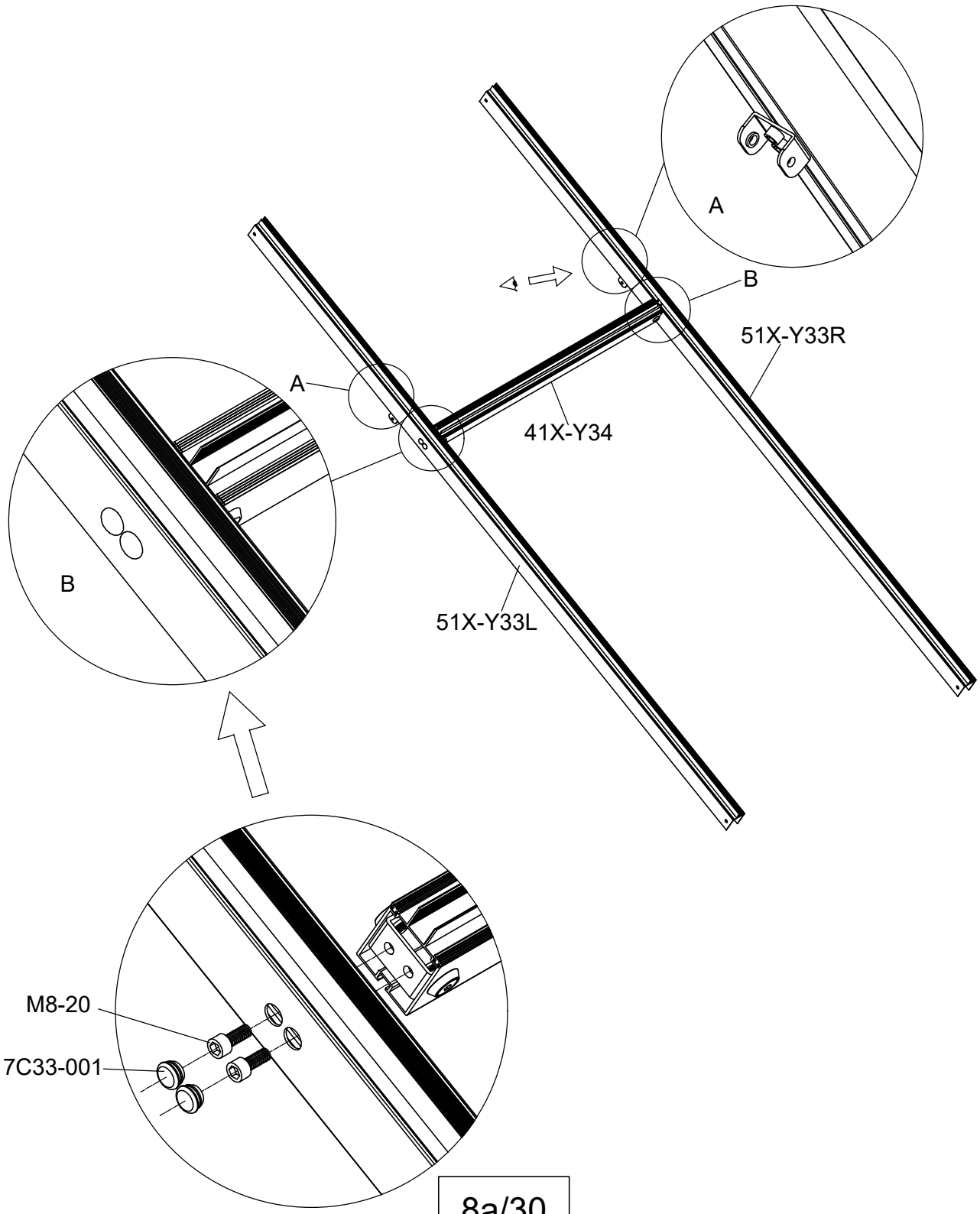

| Part | NO. | QTY. | | | Length(MM) |
|---|---|---|---|---|---|
| | | 3711 | 3712 | 3713 | |
| | 51X-Y33 | 2 | 0 | 2 | 2148 |

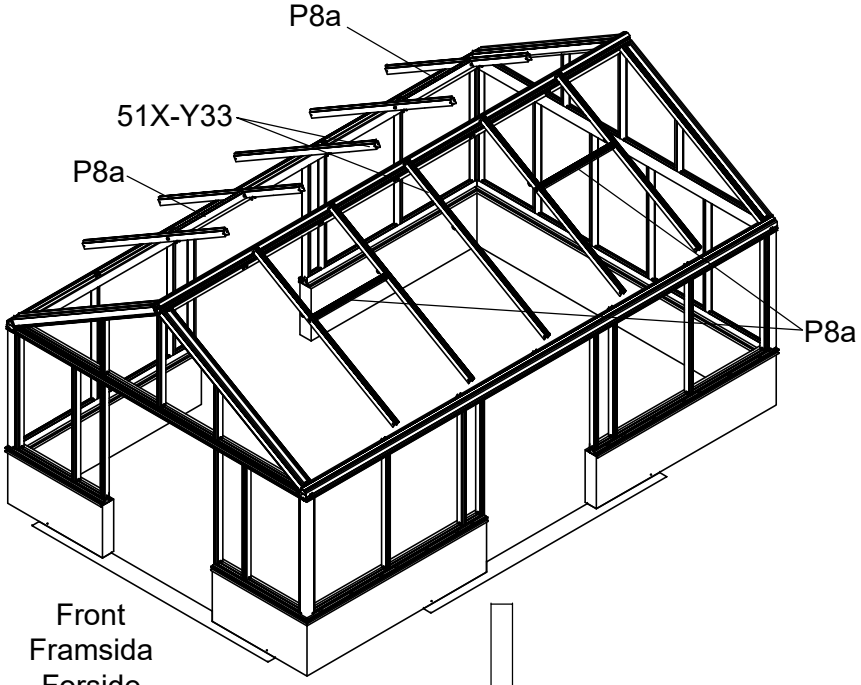


Front
Framsida
Forside
Framside
Etupuoli
Vorne

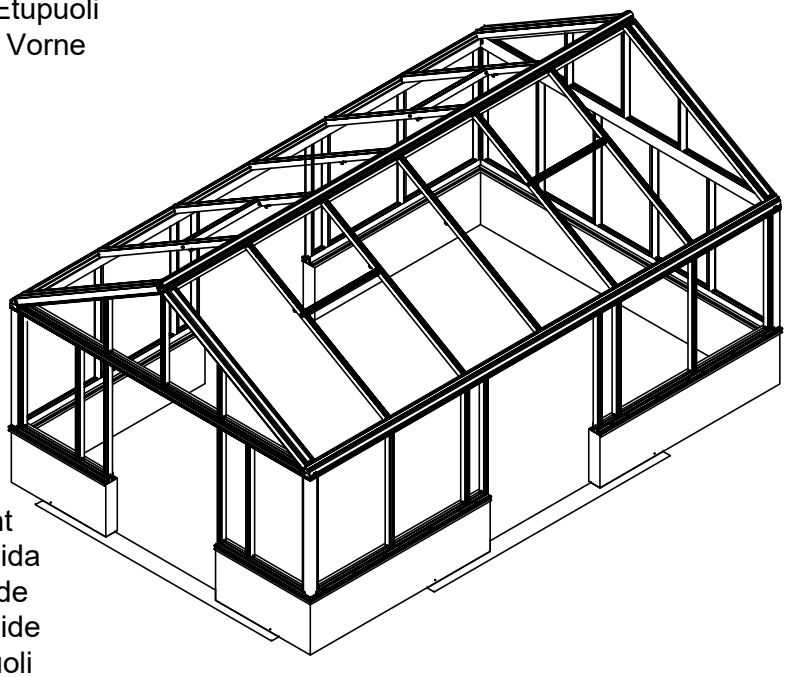

Front
Framsida
Forside
Framside
Etupuoli
Vorne

| 3711 | 3712 | 3713 |
|---|---|---|
| 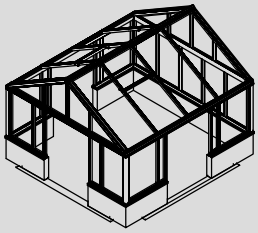 | 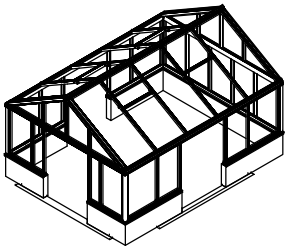 | 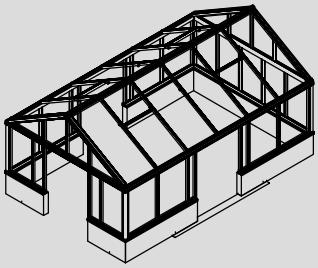 |

| Part | NO. | QTY. | | | Length(MM) |
|---|---|---|---|---|---|
| | | 3711 | 3712 | 3713 | |
| | Si8-16 | 24 | 32 | 40 | PCS |
| | 7B33-020 | 24 | 32 | 40 | PCS |

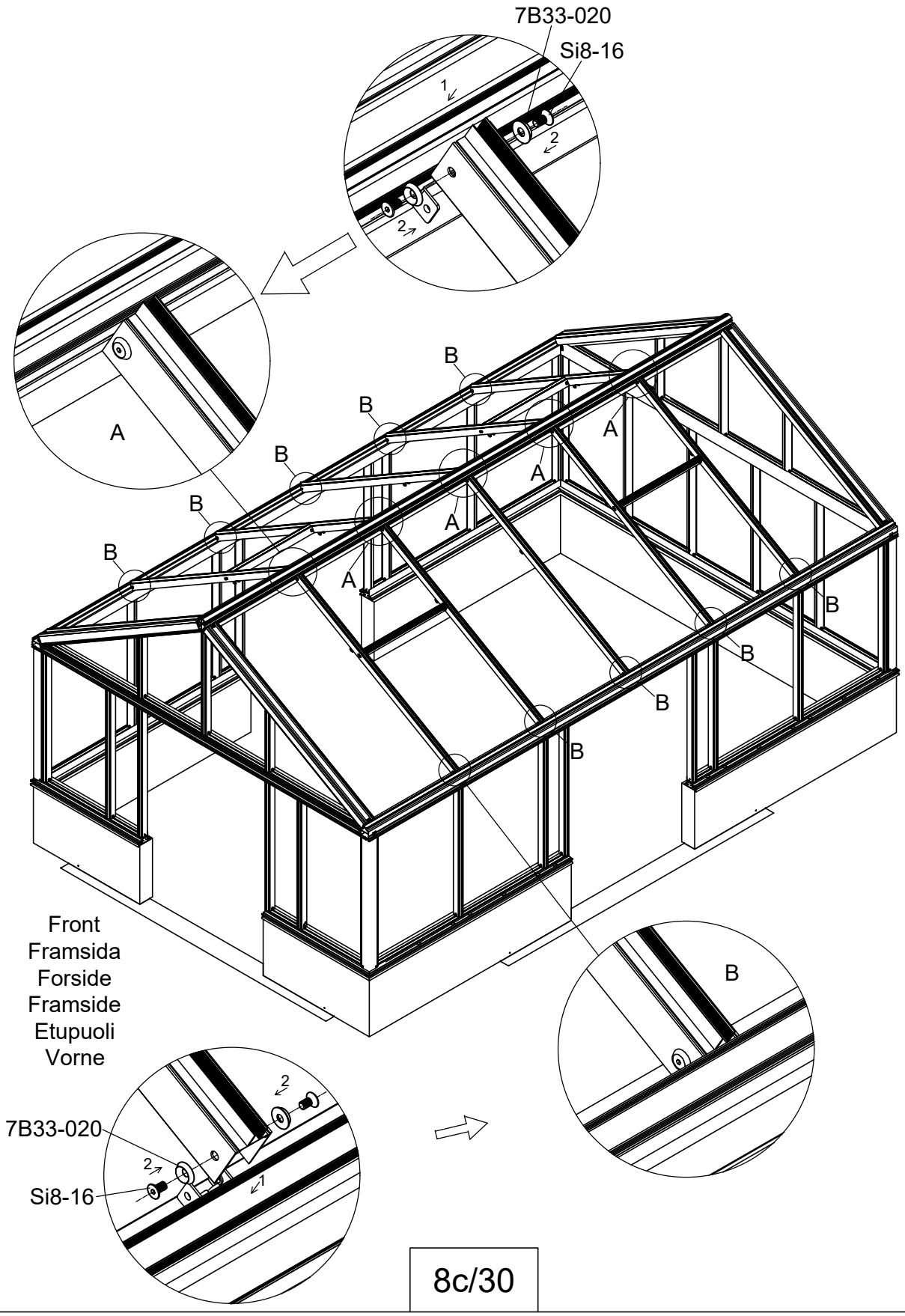

| Part | NO. | QTY. | | | Length(MM) |
|---|---|---|---|---|---|
| | | 3711 | 3712 | 3713 | |
| | 7C28-004 | 10 | 12 | 14 | PCS |
| | Z4.2-13 | 20 | 24 | 28 | PCS |

| Part | Product | NO. | Length(MM) | QTY. | Code |
|---|---|---|---|---|---|
| | 3711 | 41X-Y62-4BR | 4228 | 1 | A005 |
| | 3712 | 41X-Y62-5BR | 5229 | | |
| | 3713 | 41X-Y62-6BR | 6230 | | |
| | 3711 | 41X-Y62-4BL | 4228 | 1 | A006 |
| | 3712 | 41X-Y62-5BL | 5229 | | |
| | 3713 | 41X-Y62-6BL | 6230 | | |

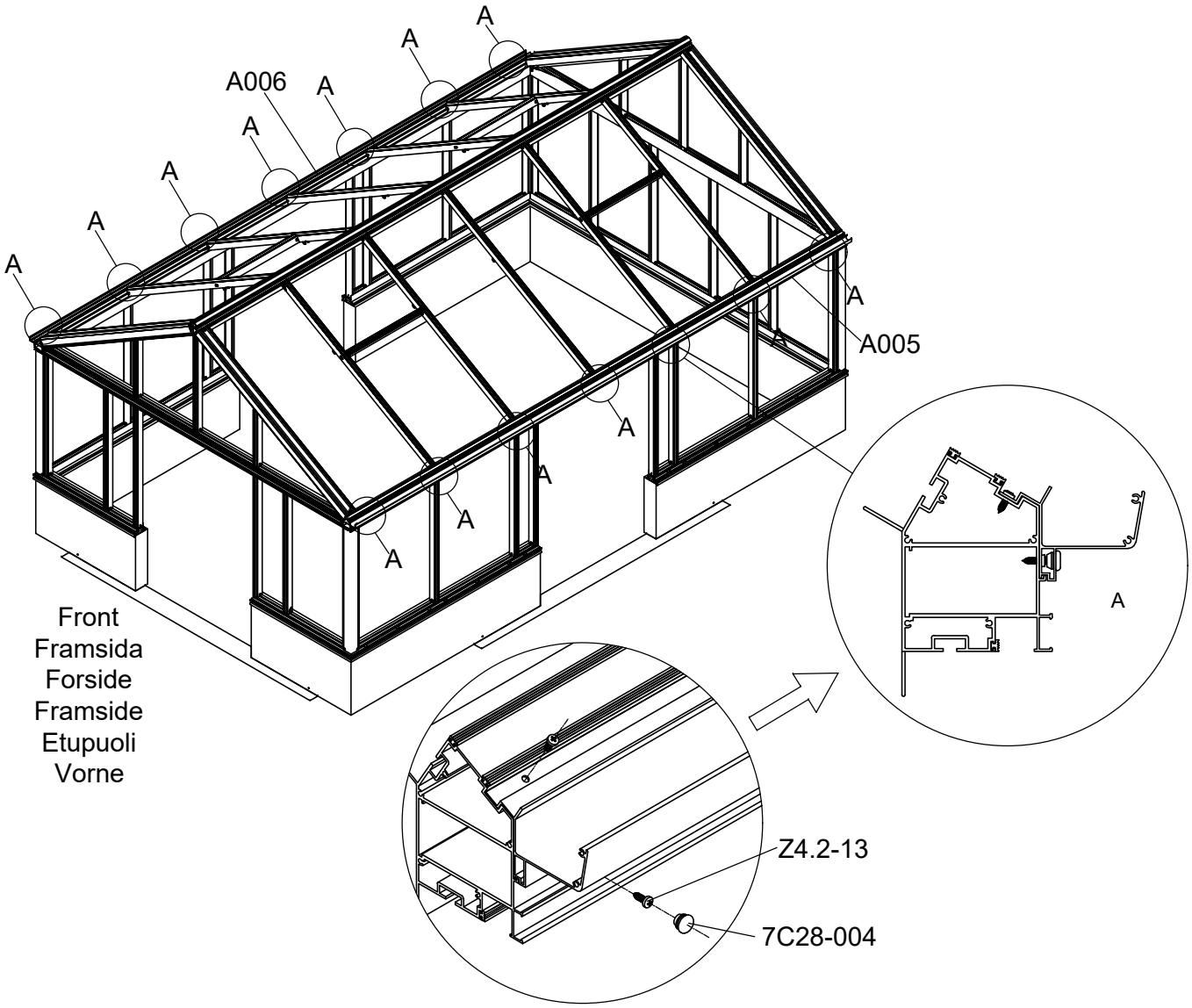

| Part | NO. | QTY. | | | Length(MM) |
|---|---|---|---|---|---|
| | | 3711 | 3712 | 3713 | |
| | 41X-Y35 | 3 | 4 | 5 | 1500 |
| | Si8-16 | 12 | 16 | 20 | PCS |
| | 7B33-020 | 12 | 16 | 20 | PCS |

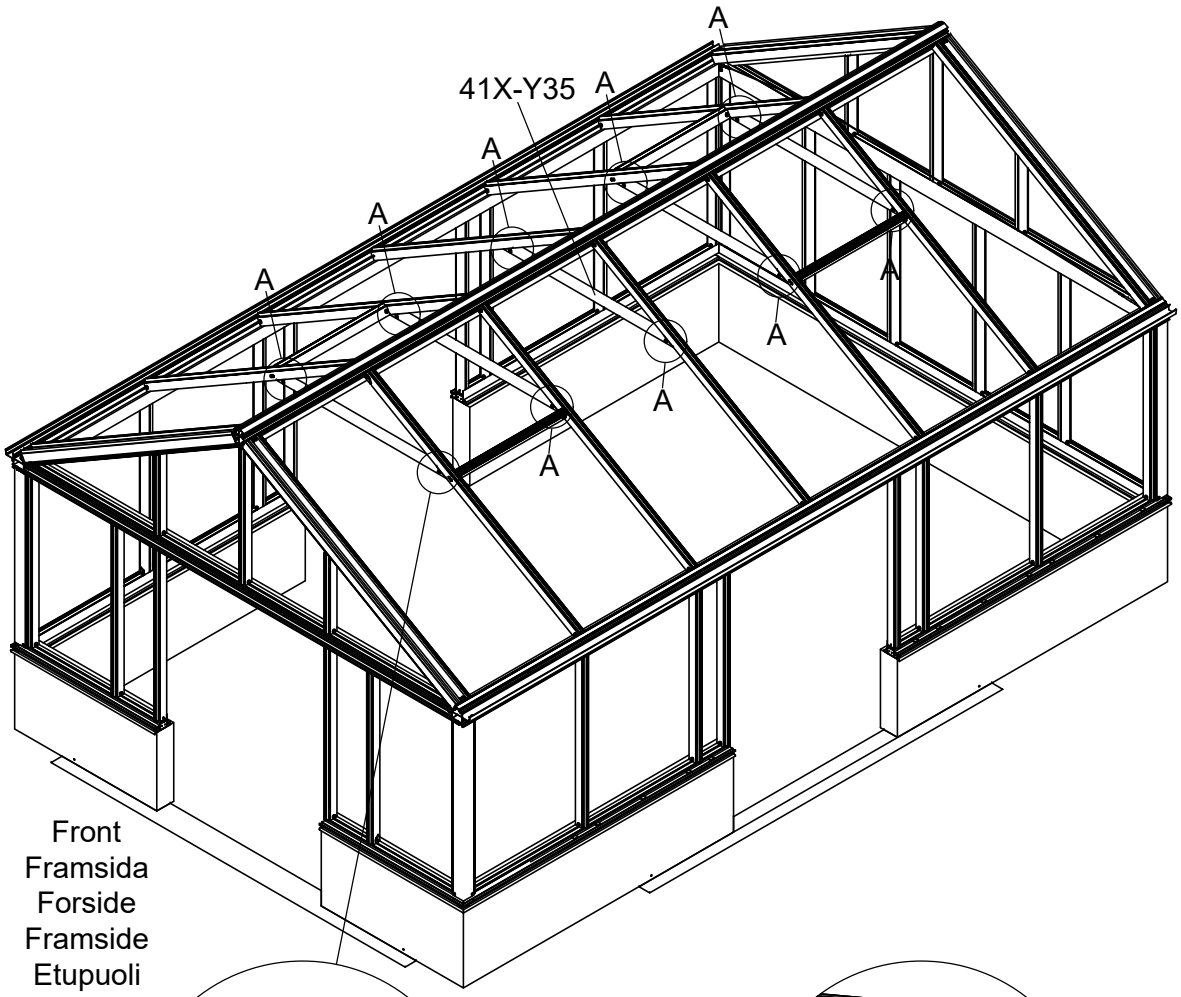


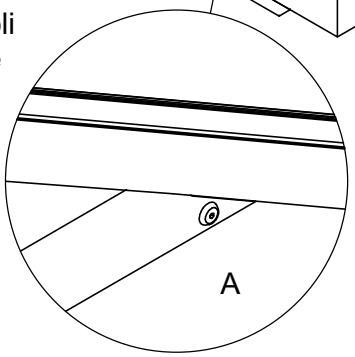


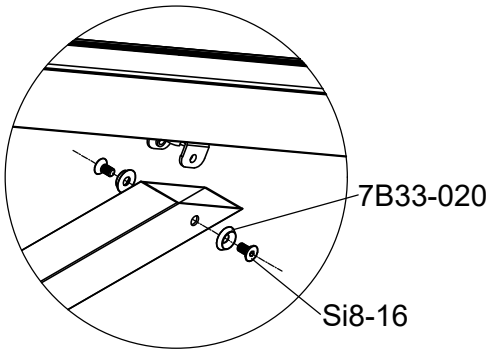


| 3711 | 3712 | 3713 |
|---|---|---|
| 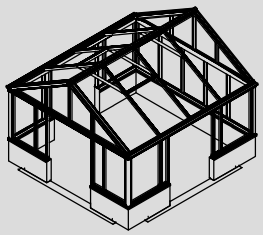 | 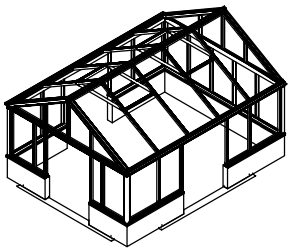 | 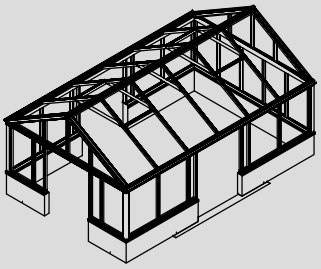 |

| Part | NO. | QTY. | | | Length(MM) |
|---|---|---|---|---|---|
| | | 3711 | 3712 | 3713 | |
| | J12 | 51 | 57 | 63 | PCS |

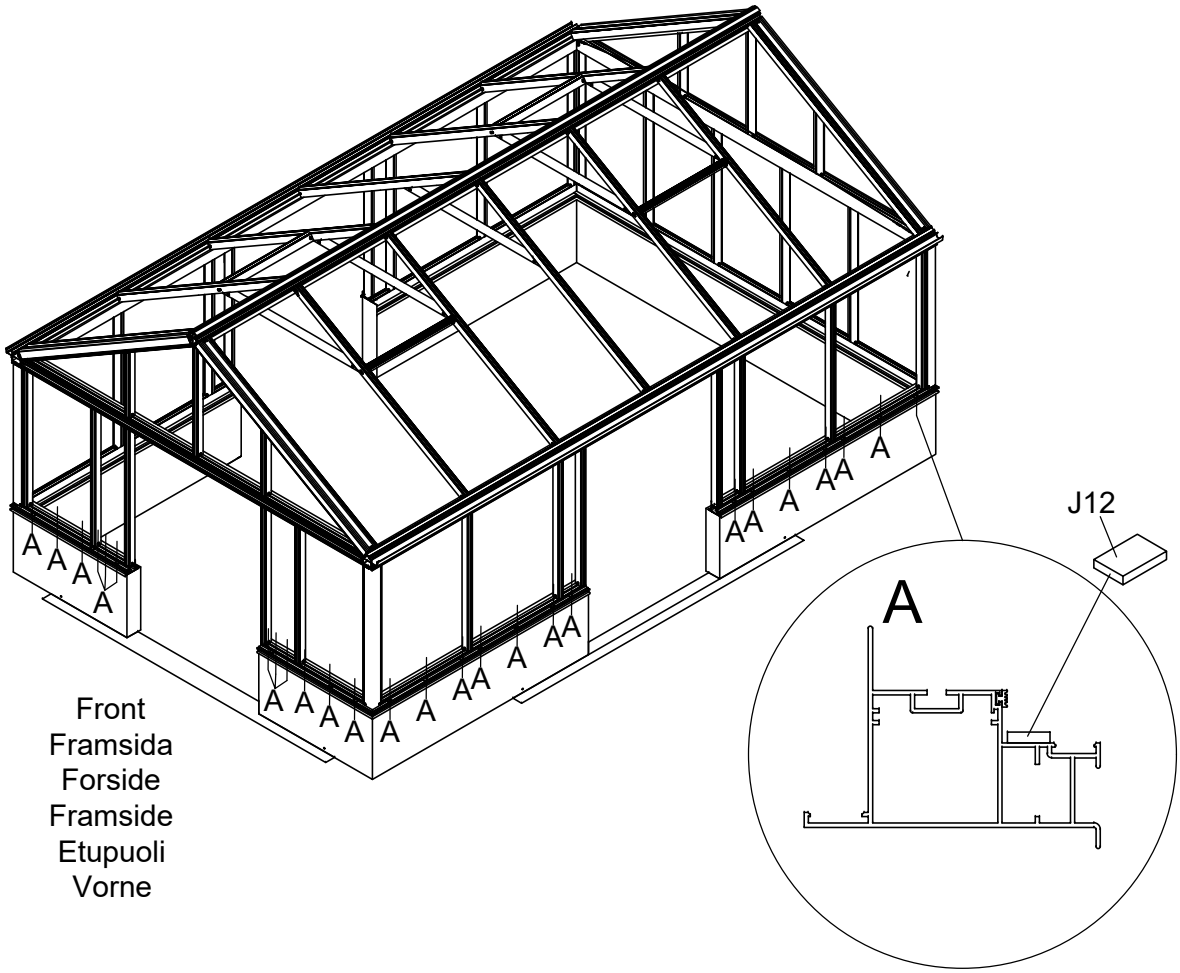


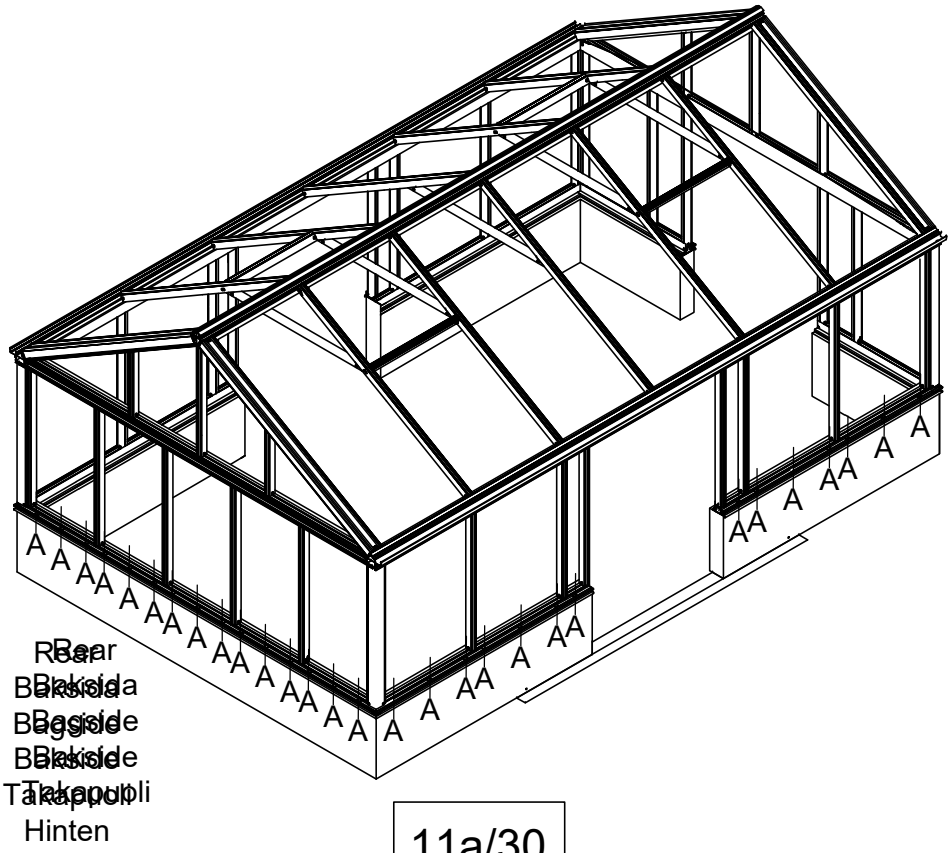

| Part | NO. | QTY. | | | Length(MM) |
|---|---|---|---|---|---|
| | | 3711 | 3712 | 3713 | |
| | 730×1369 | 2 | 4 | 2 | 1369 |
| | 354×1369 | 2 | 2 | 2 | 1369 |
| | 980×1369 | 2 | 2 | 4 | 1369 |
| | 228×1369 | 2 | 0 | 2 | 1369 |

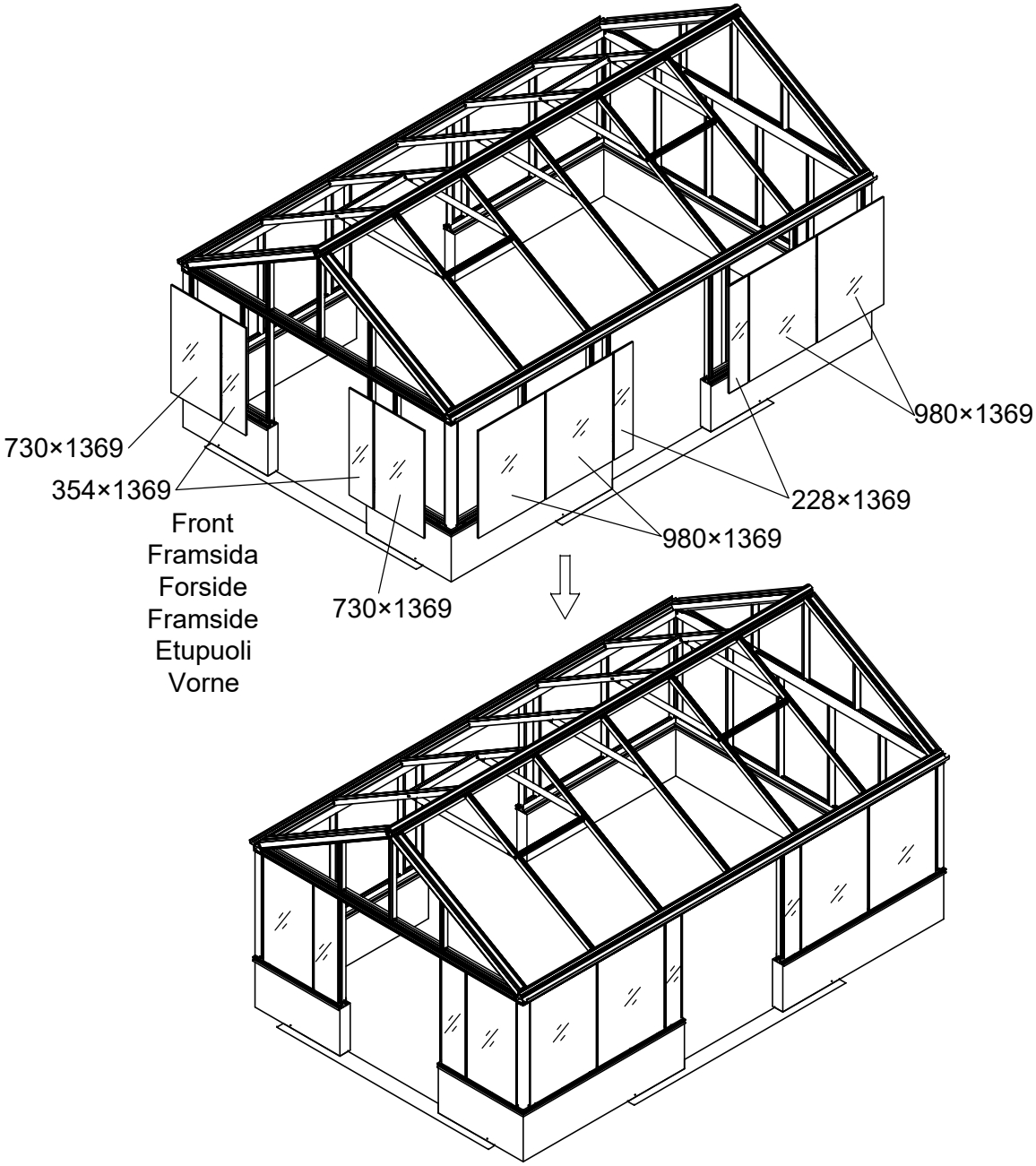


| 3711 | 3712 | 3713 |
|---|---|---|
| 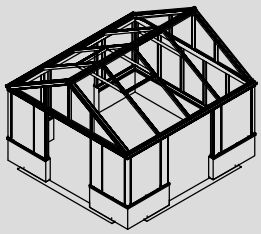 | 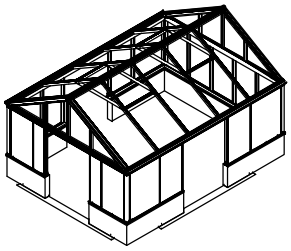 | 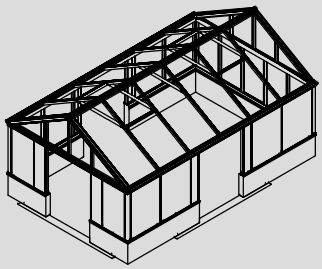 |

| Part | NO. | QTY. | | | Length(MM) |
|---|---|---|---|---|---|
| | | 3711 | 3712 | 3713 | |
| | 730×1369 | 5 | 7 | 5 | 1369 |
| | 980×1369 | 2 | 2 | 4 | 1369 |
| | 228×1369 | 2 | 0 | 2 | 1369 |

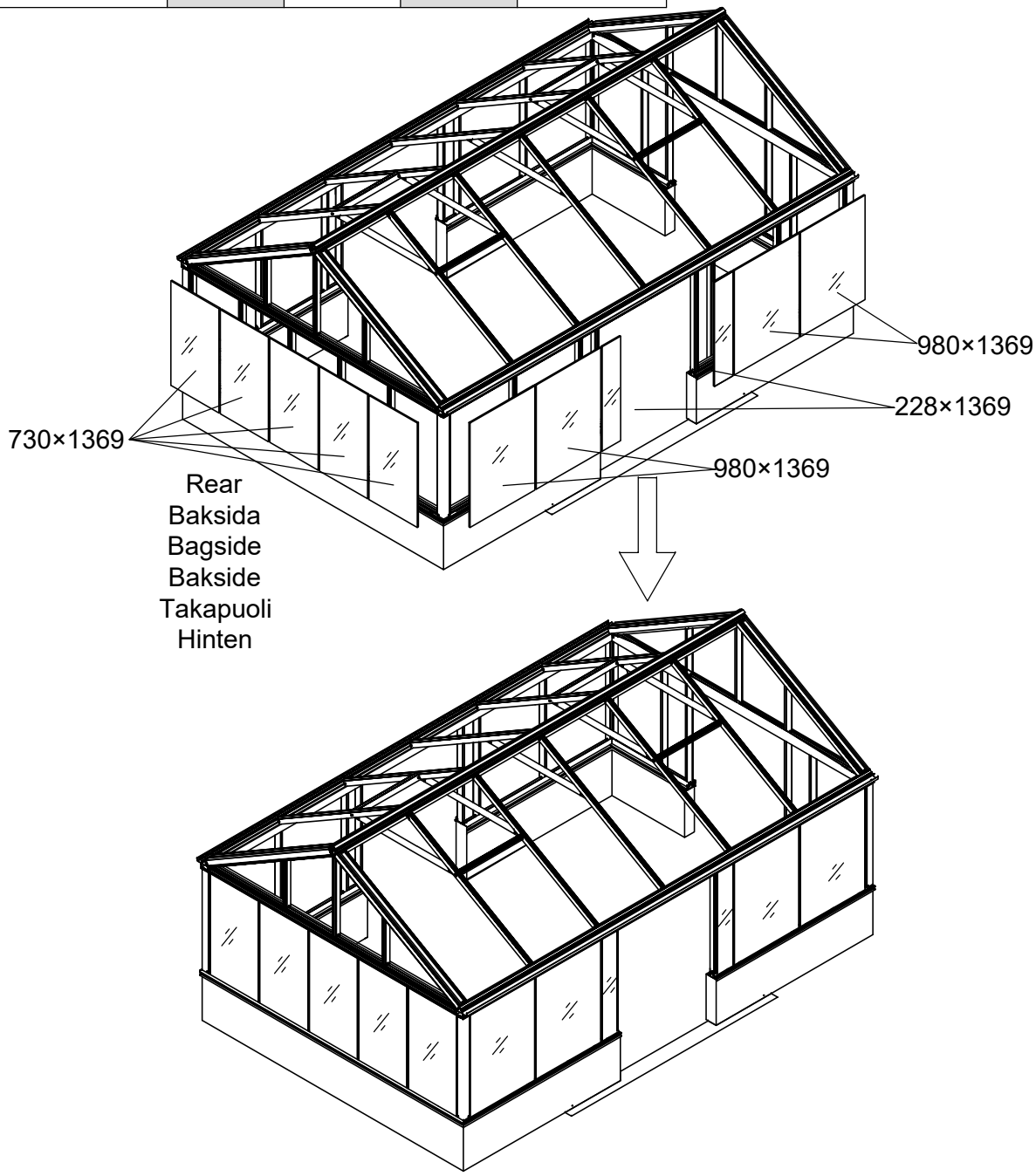


| 3711 | 3712 | 3713 |
|---|---|---|
| 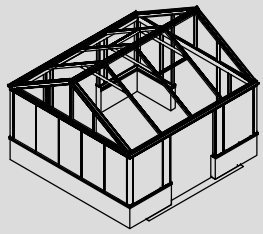 | 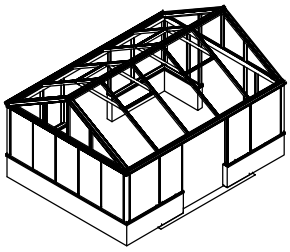 | 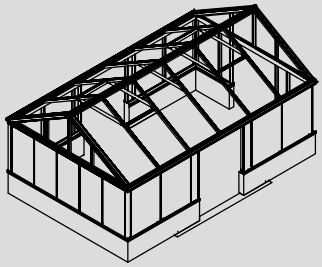 |

| Part | Product | NO. | Length(MM) | CTN NO. | QTY. | Code |
|---|---|---|---|---|---|---|
| | 3711 | 41A-S15-4R | 1395 | 3701P-TS-4 | 2 | A014 |
| | 3712 | 41A-S15-5R | 1895 | 3701P-TS-5 | | |
| | 3713 | 41A-S15-6R | 2396 | 3701P-TS-6 | | |
| | 3711 | 41A-S15-4L | 1395 | 3701P-TS-4 | 2 | A015 |
| | 3712 | 41A-S15-5L | 1895 | 3701P-TS-5 | | |
| | 3713 | 41A-S15-6L | 2396 | 3701P-TS-6 | | |

| Part | NO. | QTY. | Length(MM) | CTN NO. |
|---|---|---|---|---|
| | 51X-Y14 | 1 | 3990 | 3701P-TS-5F |
| | 51A-Y14R | 1 | 1270 | 3701P-TS-5G |
| | 51A-Y14L | 1 | 1270 | 3701P-TS-5G |

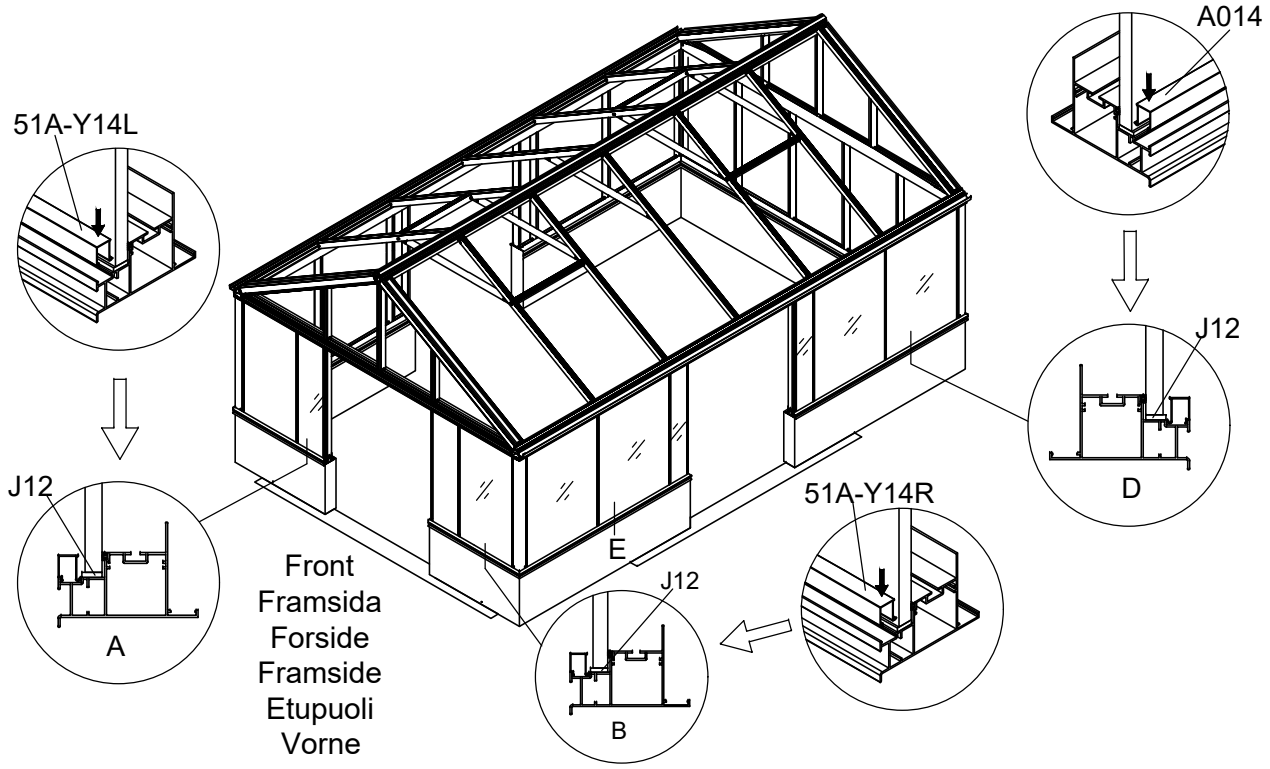


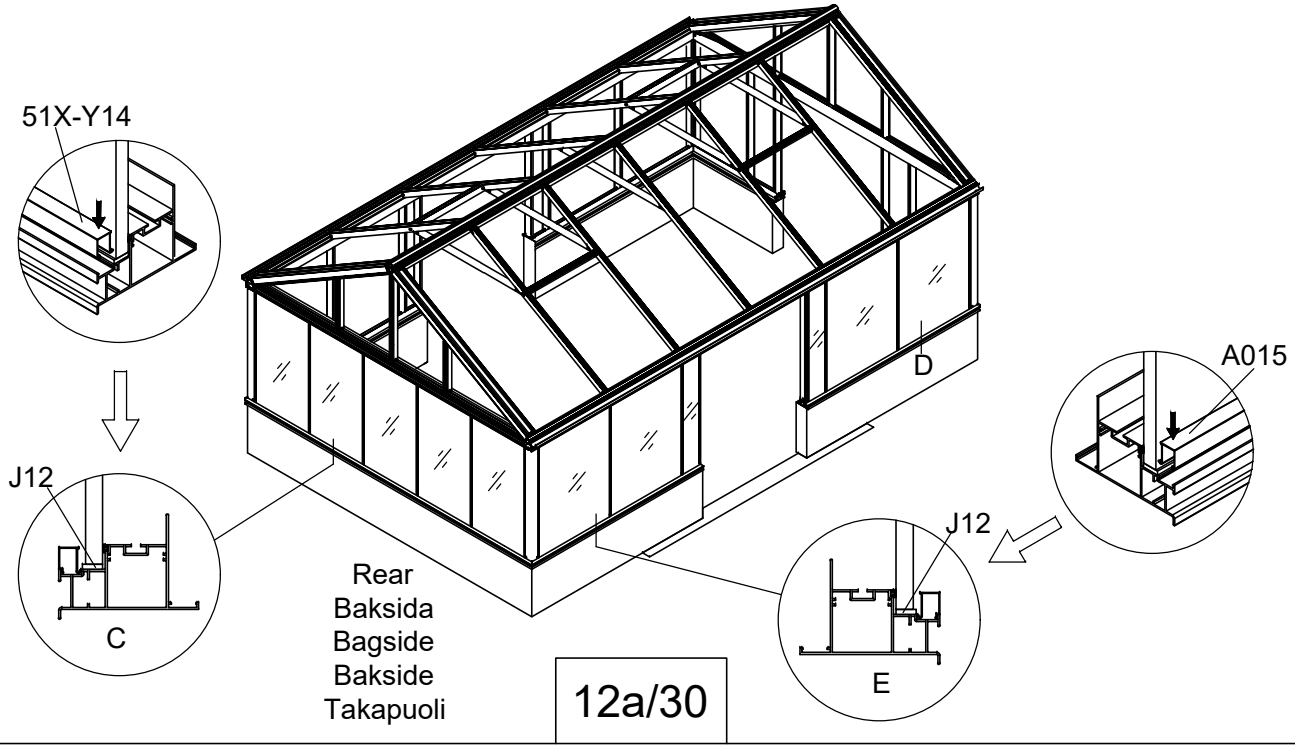

| Part | NO. | QTY. | | | Length(MM) | CTN NO. |
|---|---|---|---|---|---|---|
| | | 3711 | 3712 | 3713 | | |
| | 41A-Y01 | 7 | 8 | 9 | 1335 | |
| | 41A-Y01 | 1 | 0 | 1 | 1335 | 3701P-TS-Y30 |
| | 41A-Y02 | 4 | | | 1335 | |

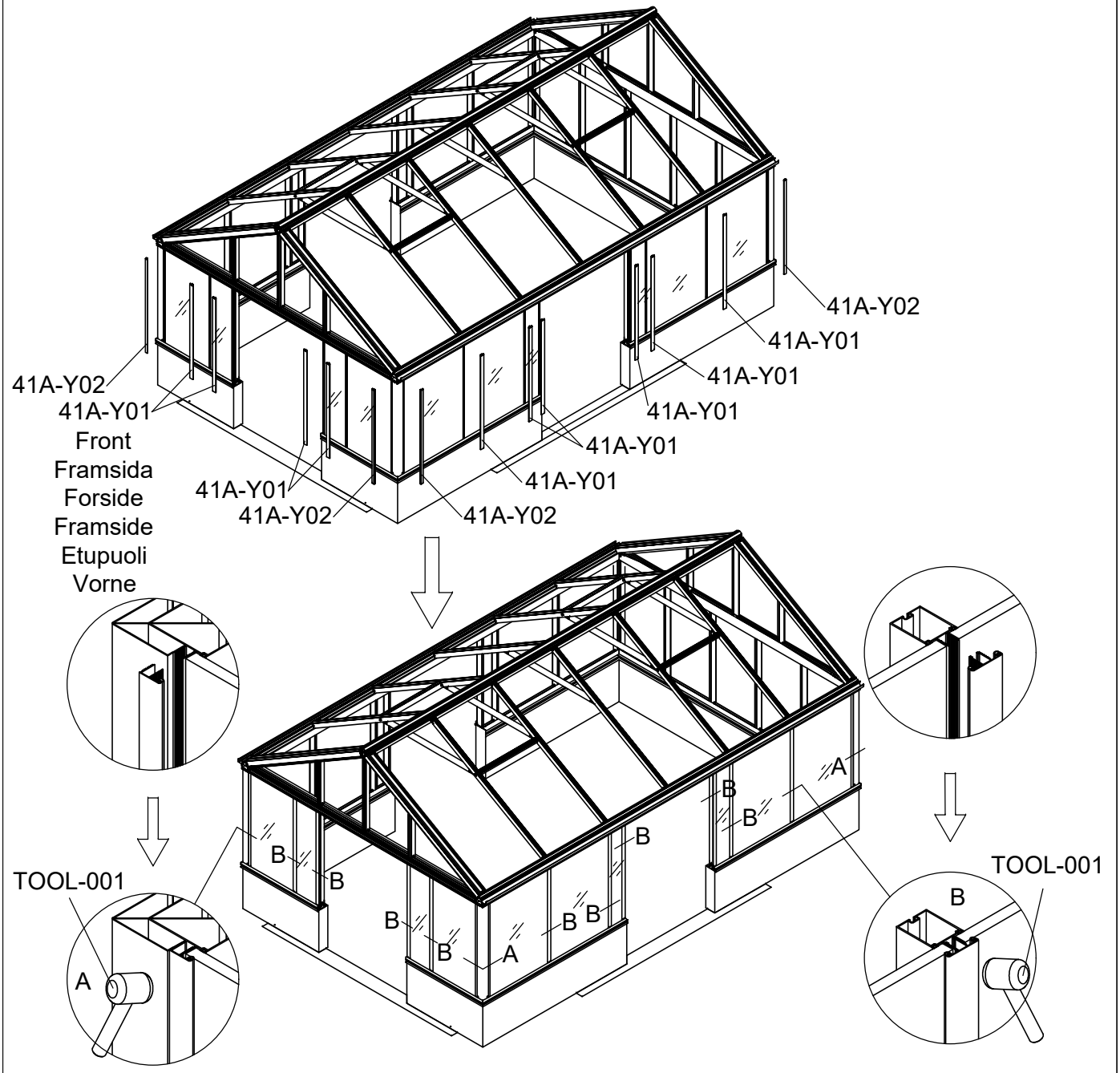


| 3711 | 3712 | 3713 |
|---|---|---|
| 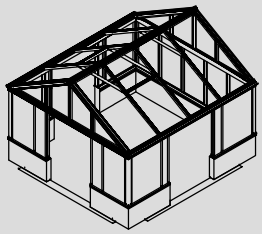 | 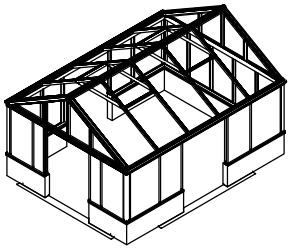 | 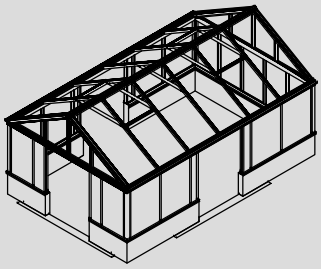 |

| Part | NO. | QTY. | | | Length(MM) | CTN NO. |
|---|---|---|---|---|---|---|
| | | 3711 | 3712 | 3713 | | |
| | 41A-Y01 | 7 | 8 | 9 | 1335 | |
| | 41A-Y01 | 1 | 0 | 1 | 1335 | 3701P-TS-Y30 |
| | 41A-Y02 | 4 | | | 1335 | |

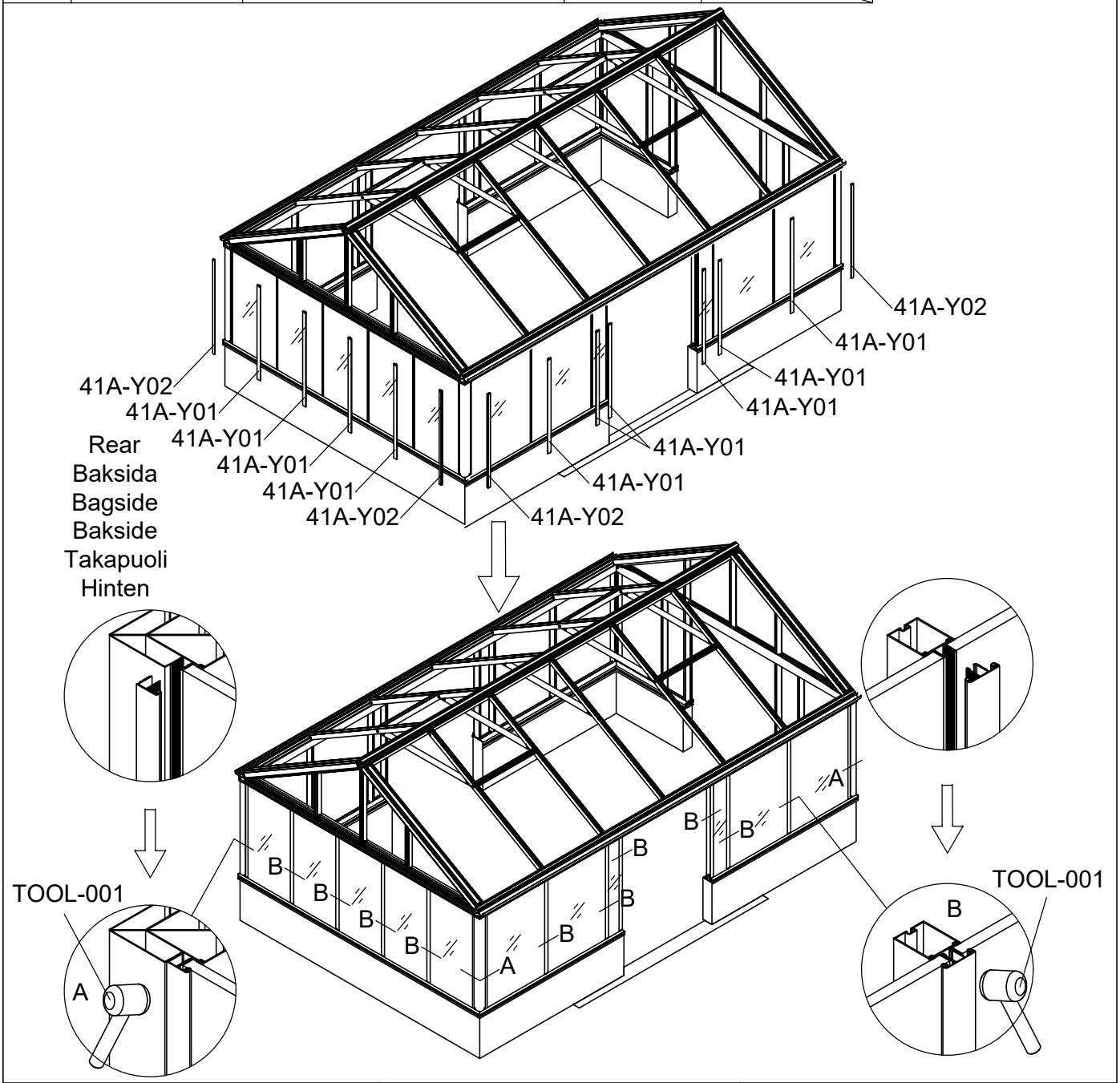


| 3711 | 3712 | 3713 |
|---|---|---|
| 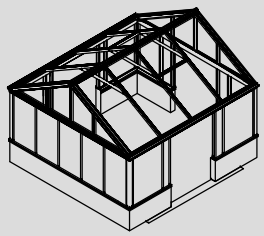 | 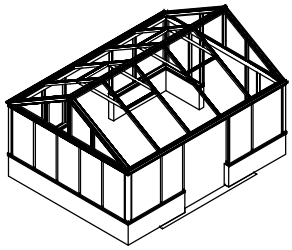 | 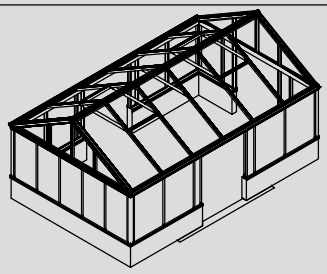 |

| Part | NO. | QTY. | | | Length(MM) |
|---|---|---|---|---|---|
| | | 3711 | 3712 | 3713 | |
| | 7C26-009A | 22M | 26M | 30M | |

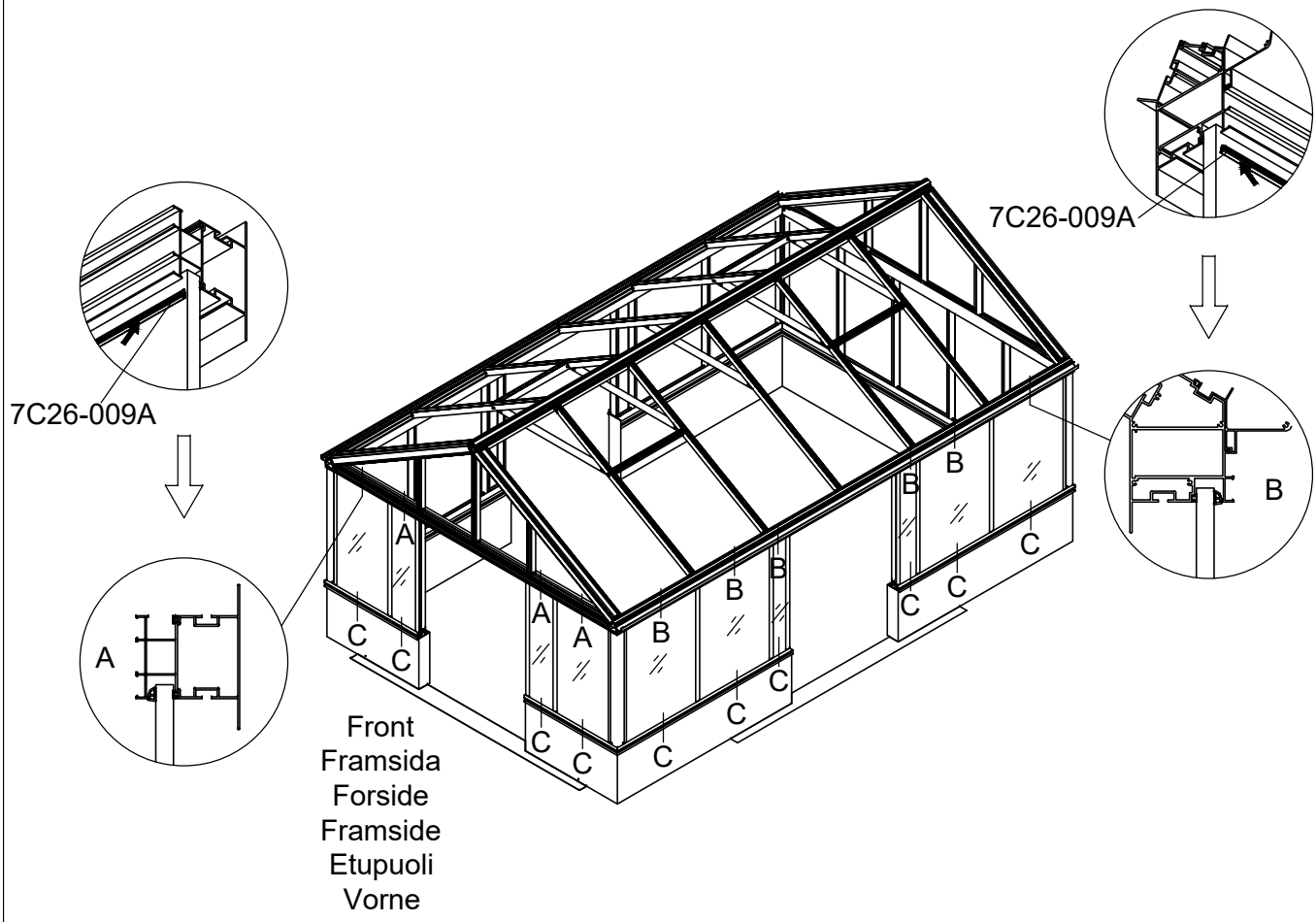


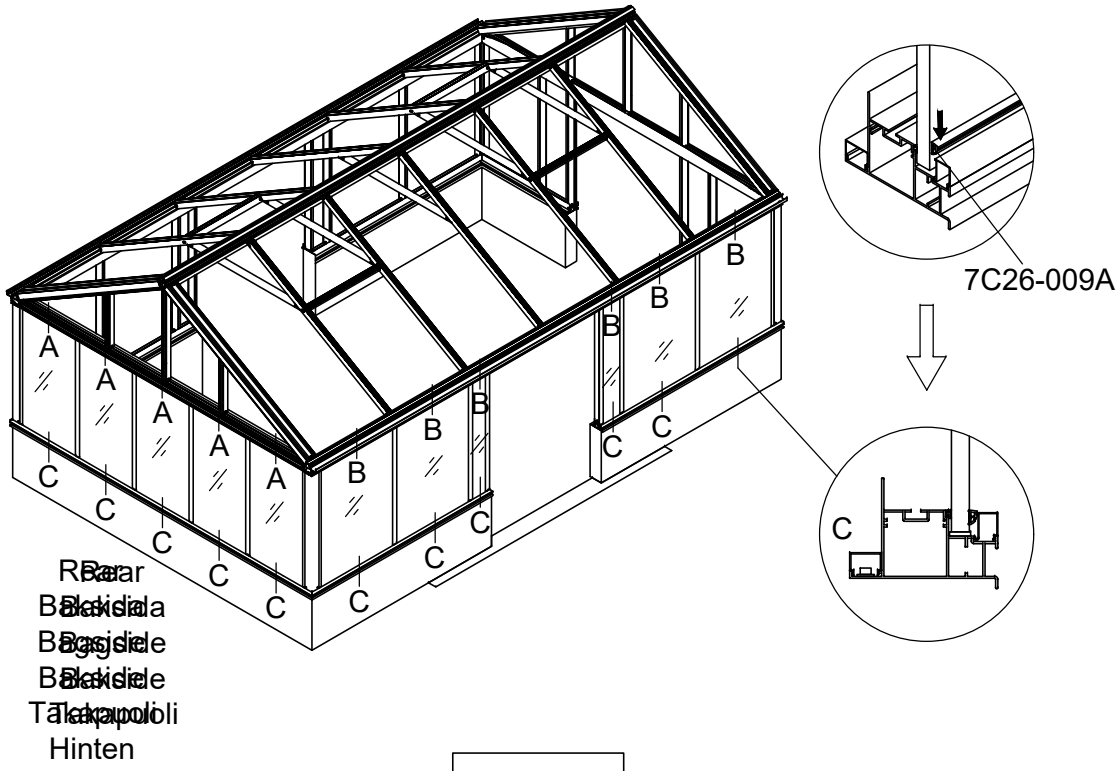

| Part | NO. | QTY. | Length(MM) |
|---|---|---|---|
| | J12 | 12 | PCS |

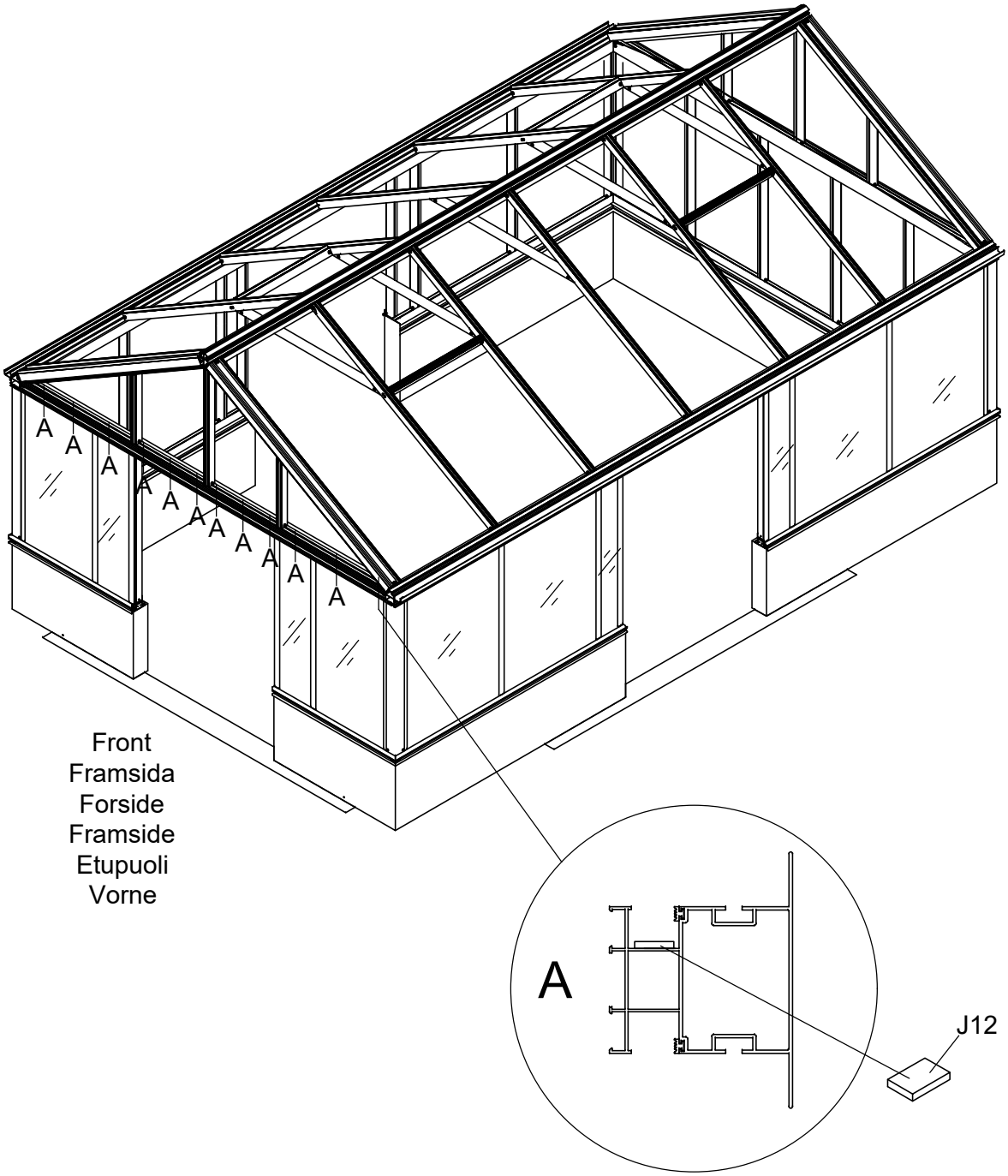

| Part | NO. | QTY. | Length(MM) |
|---|---|---|---|
| | 1075×643 | 2 | 1075 |
| | 730×1076 | 2 | 1076 |

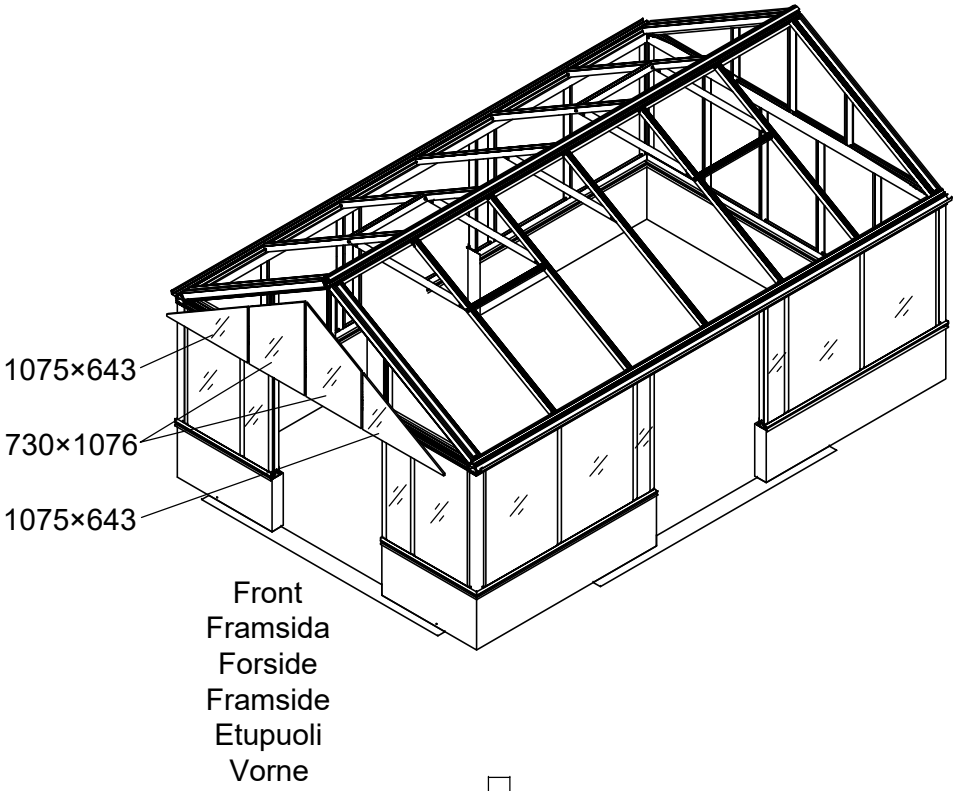


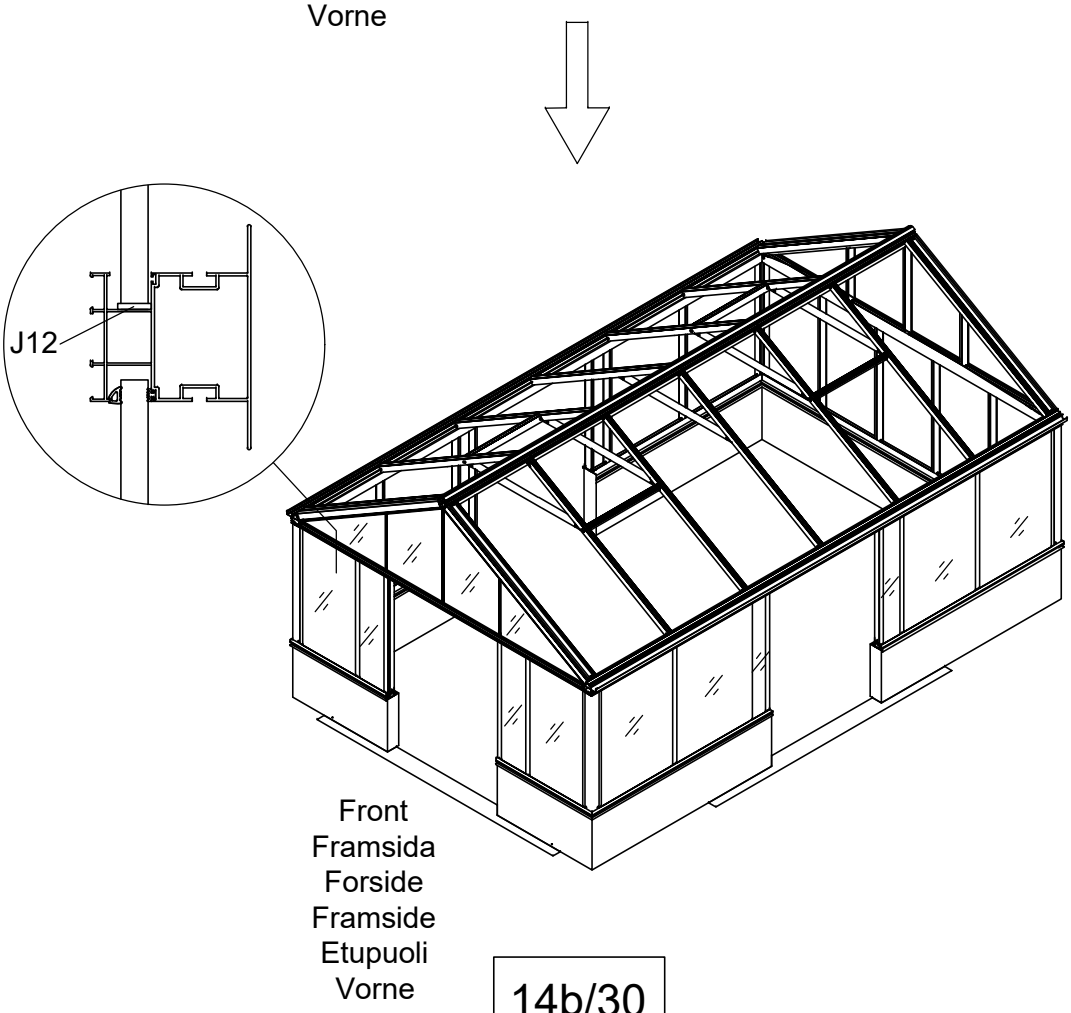

| Part | NO. | QTY. | Length(MM) |
|---|---|---|---|
| | 51X-Y03 | 1 | 1074 |
| | 51X-Y04R | 1 | 629 |
| | 51X-Y04L | 1 | 629 |
| | 51X-Y05R | 1 | 2146 |
| | 51X-Y05L | 1 | 2146 |

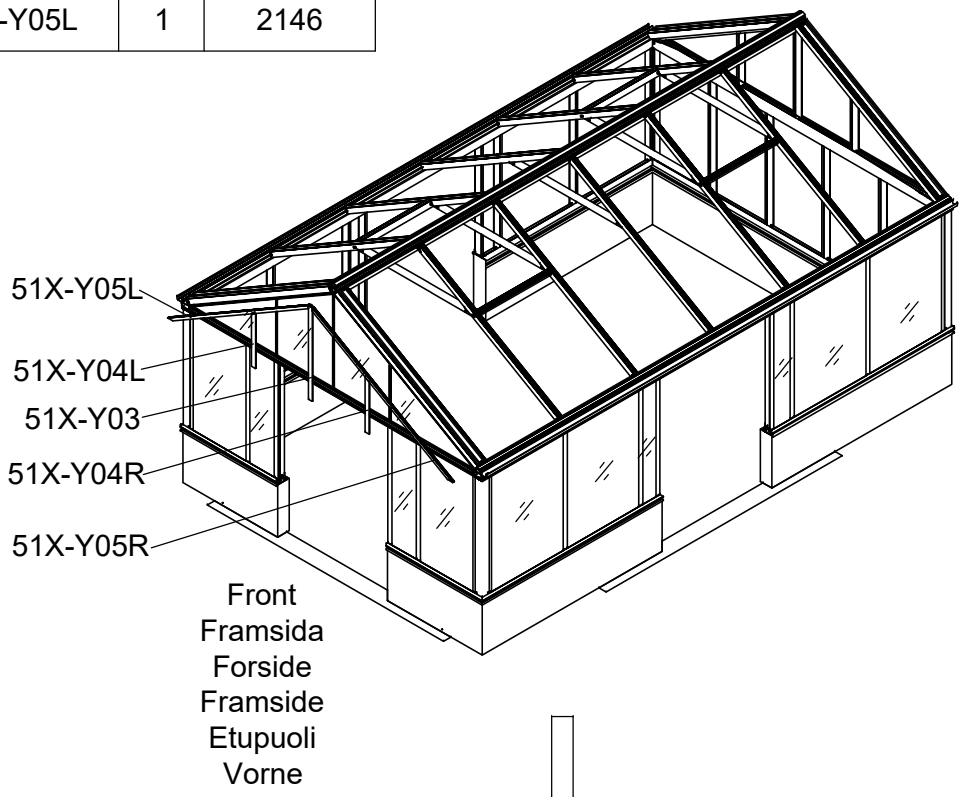


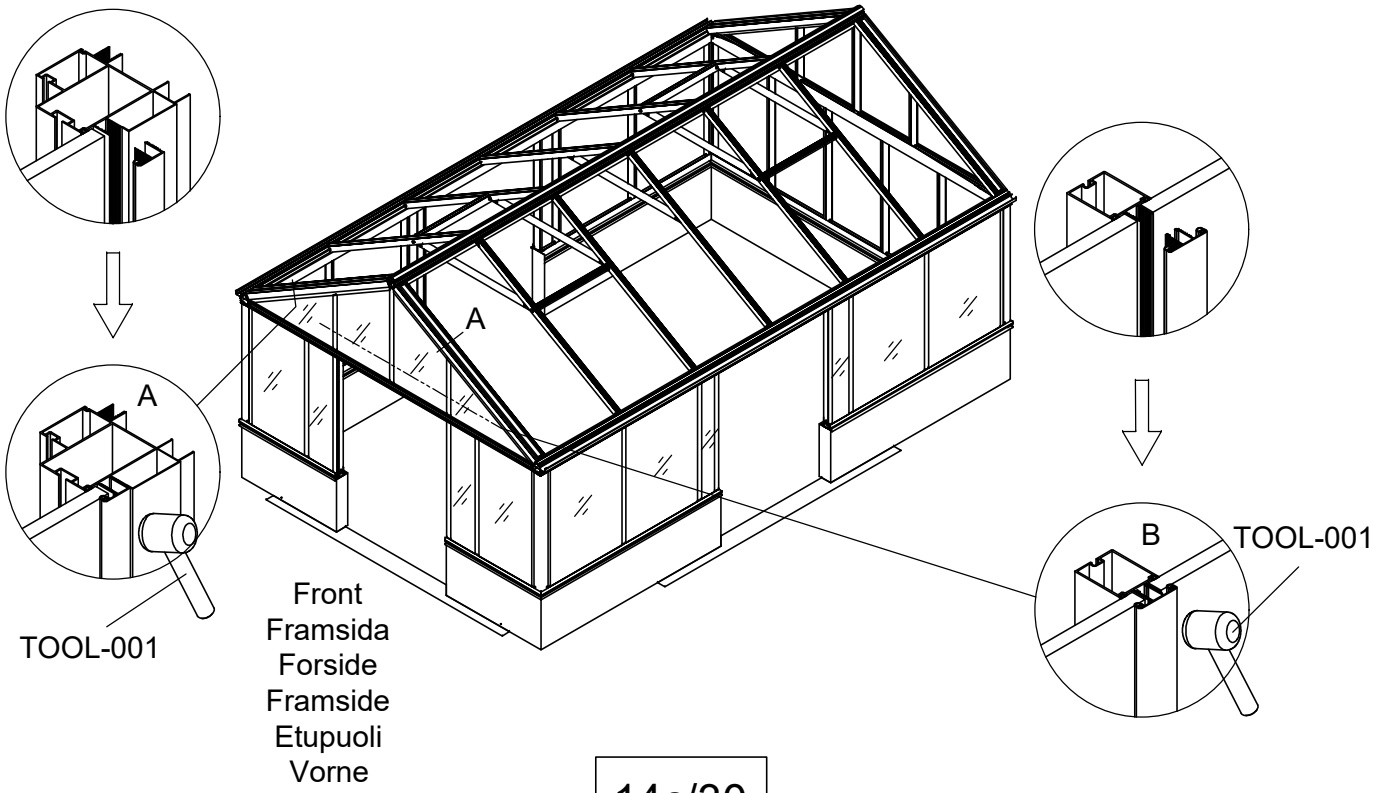

| Part | NO. | QTY. | Length(MM) |
|---|---|---|---|
| | J12 | 12 | PCS |

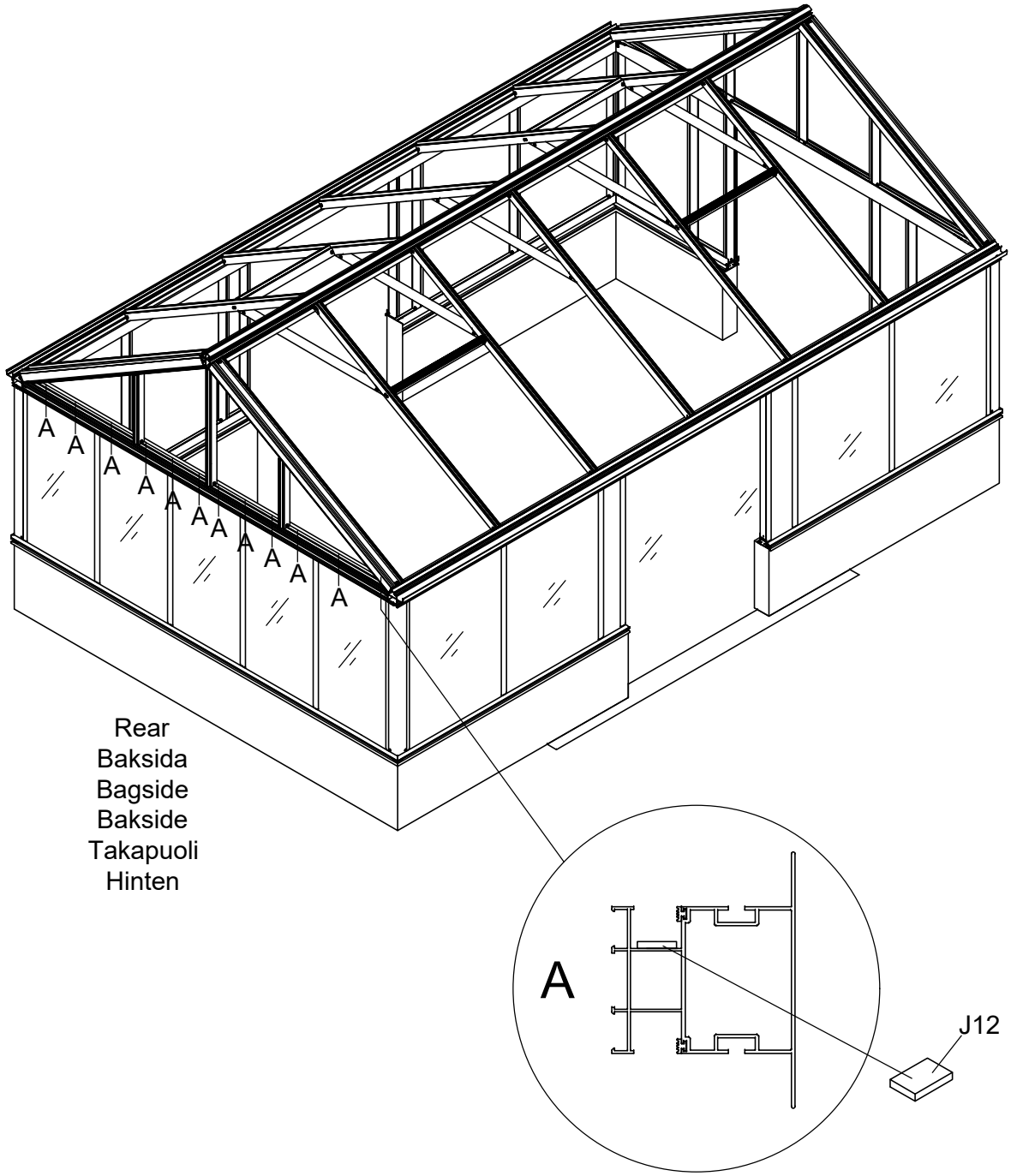

| Part | NO. | QTY. | Length(MM) |
|---|---|---|---|
| | 1075×643 | 2 | 1075 |
| | 730×1076 | 2 | 1076 |

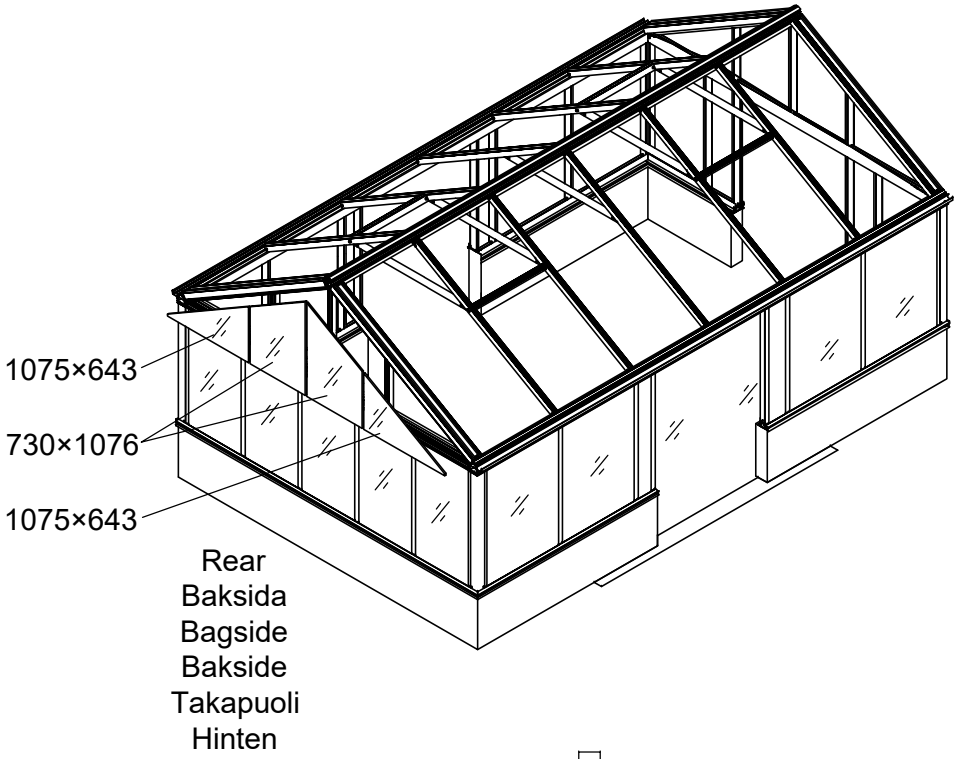


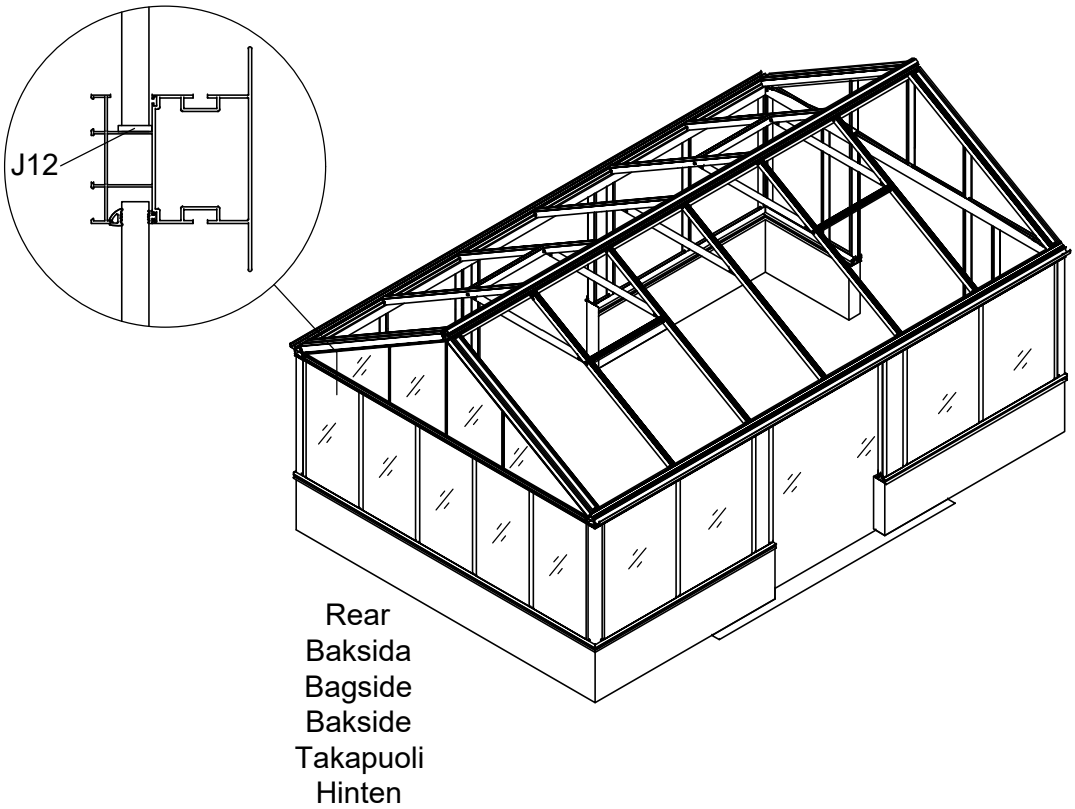

| Part | NO. | QTY. | Length(MM) |
|---|---|---|---|
| | 51X-Y03 | 1 | 1074 |
| | 51X-Y04R | 1 | 629 |
| | 51X-Y04L | 1 | 629 |
| | 51X-Y05R | 1 | 2146 |
| | 51X-Y05L | 1 | 2146 |

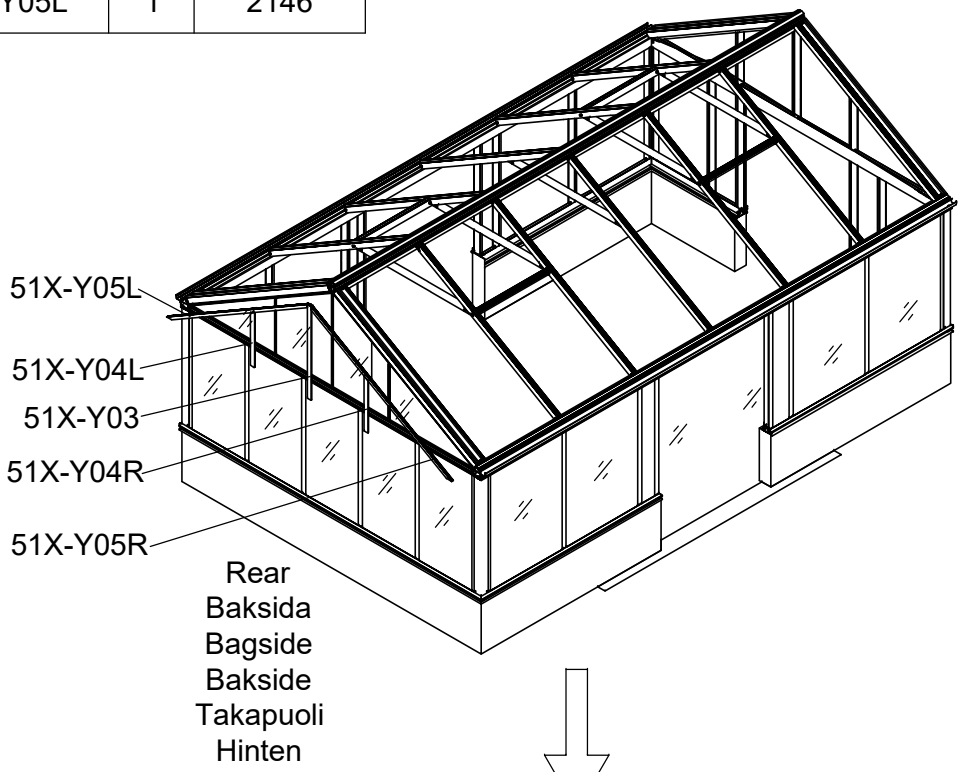


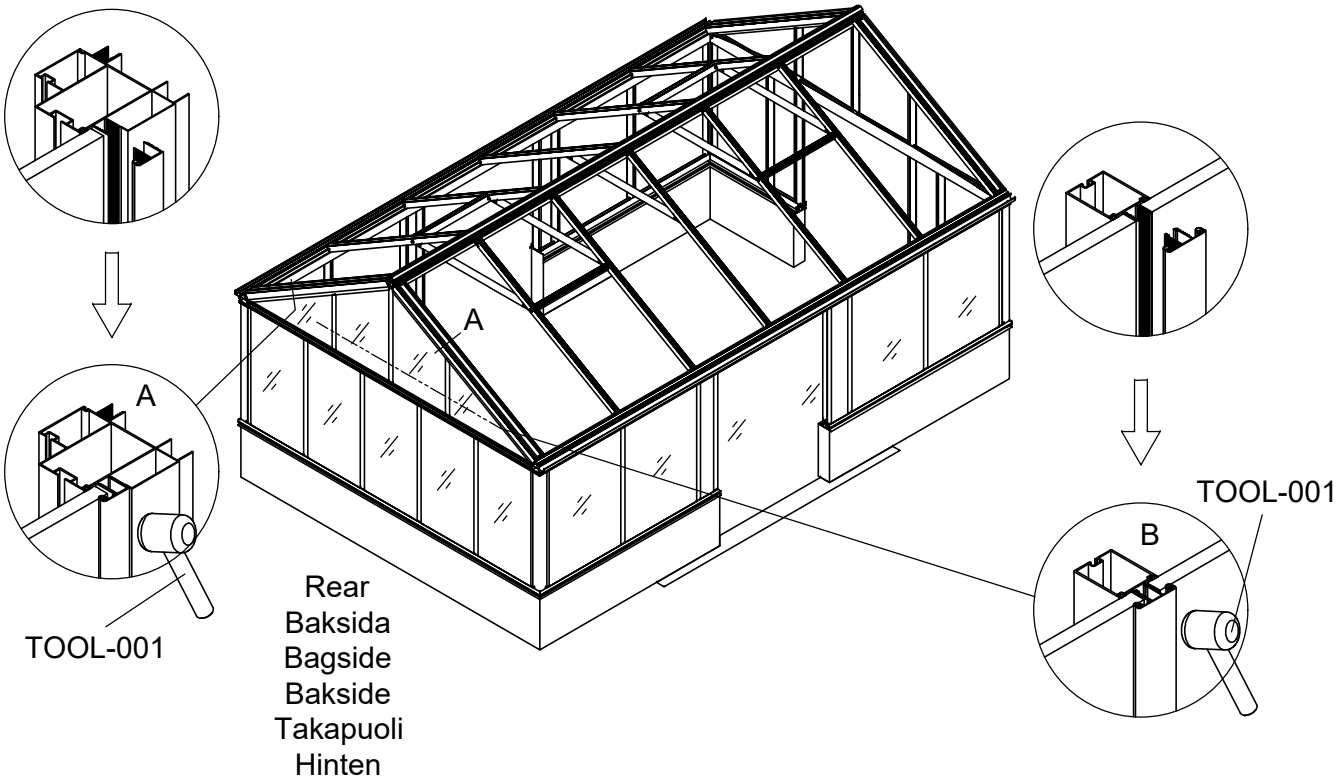

| Part | NO. | QTY. | Length(MM) |
|---|---|---|---|
| | 7C26-009A | 7.5M | |

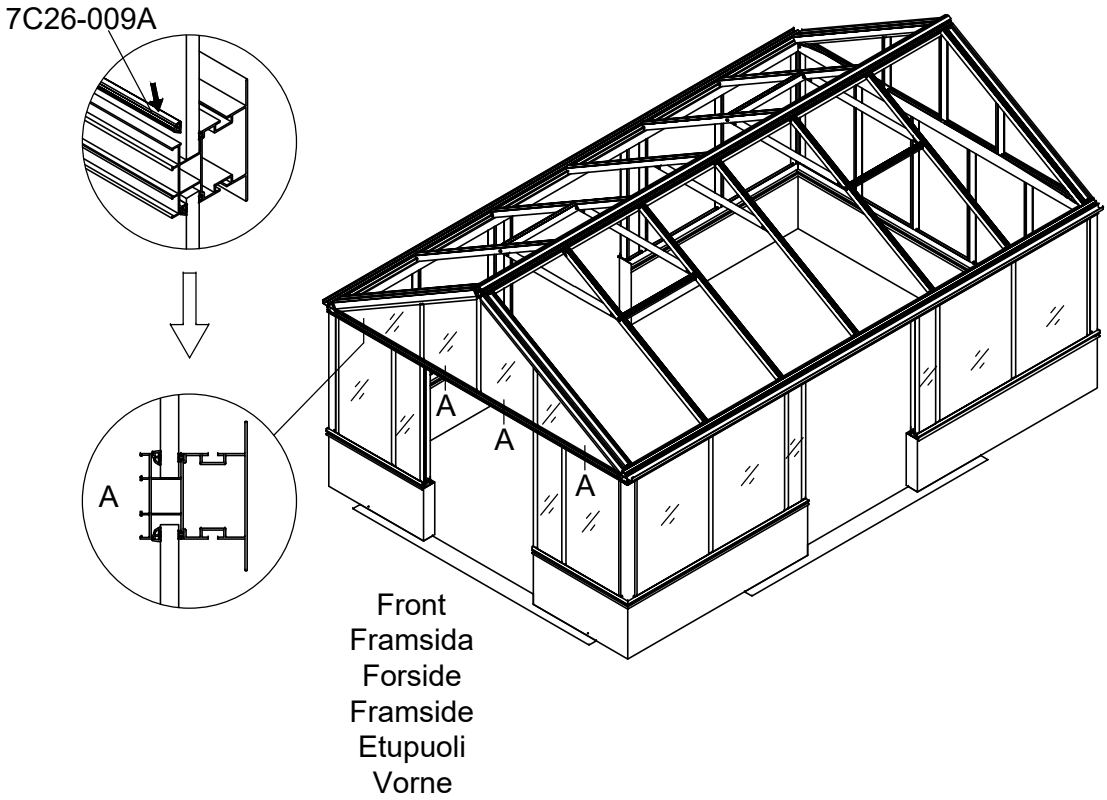


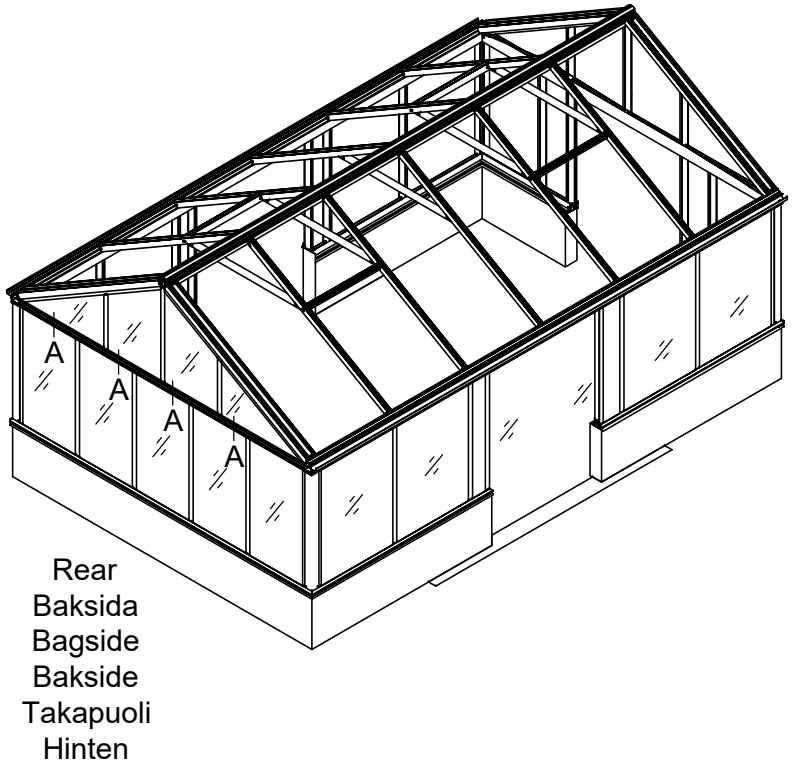

| Part | NO. | QTY. | | | Length(MM) |
|---|---|---|---|---|---|
| | | 3711 | 3712 | 3713 | |
| | J12 | 24 | 30 | 36 | PCS |

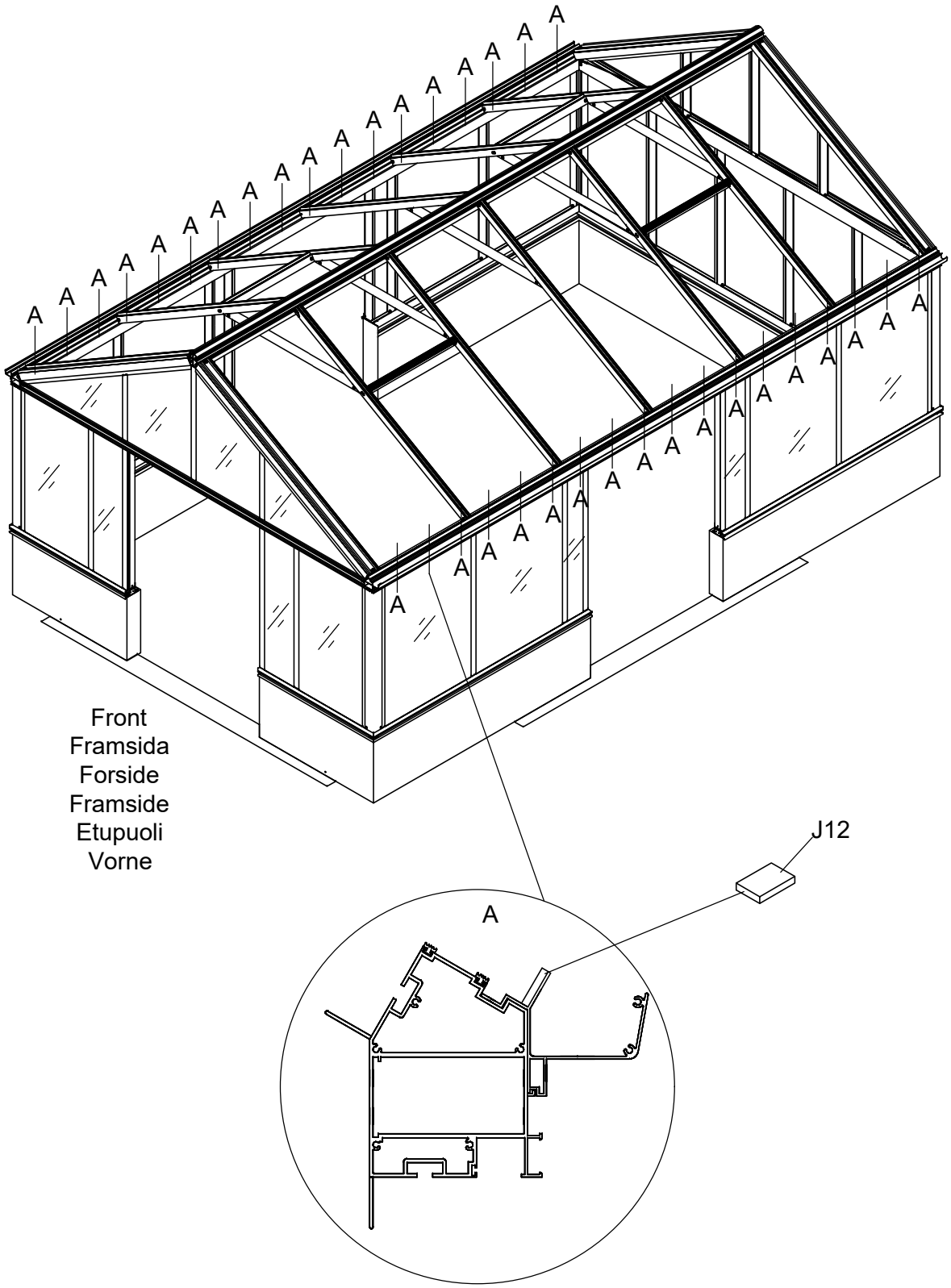

| Part | NO. | QTY. | | | Length(MM) |
|---|---|---|---|---|---|
| | | 3711 | 3712 | 3713 | |
| | 980×2234 | 6 | 6 | 8 | 2234 |
| | 980×1343 | 2 | 4 | 4 | 1343 |

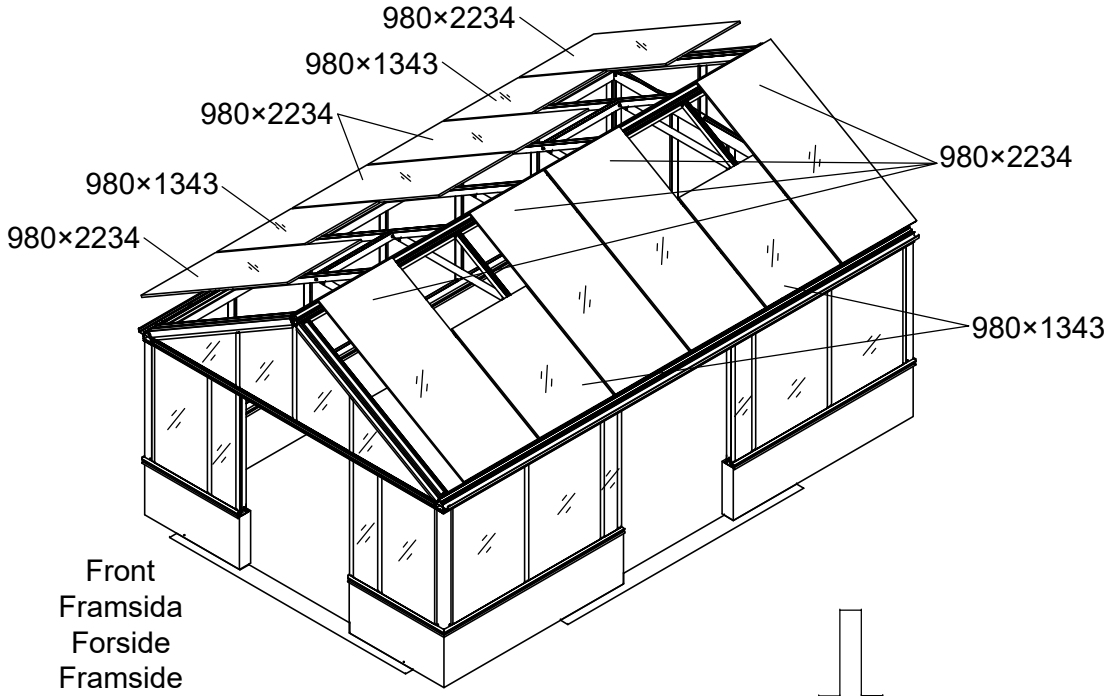


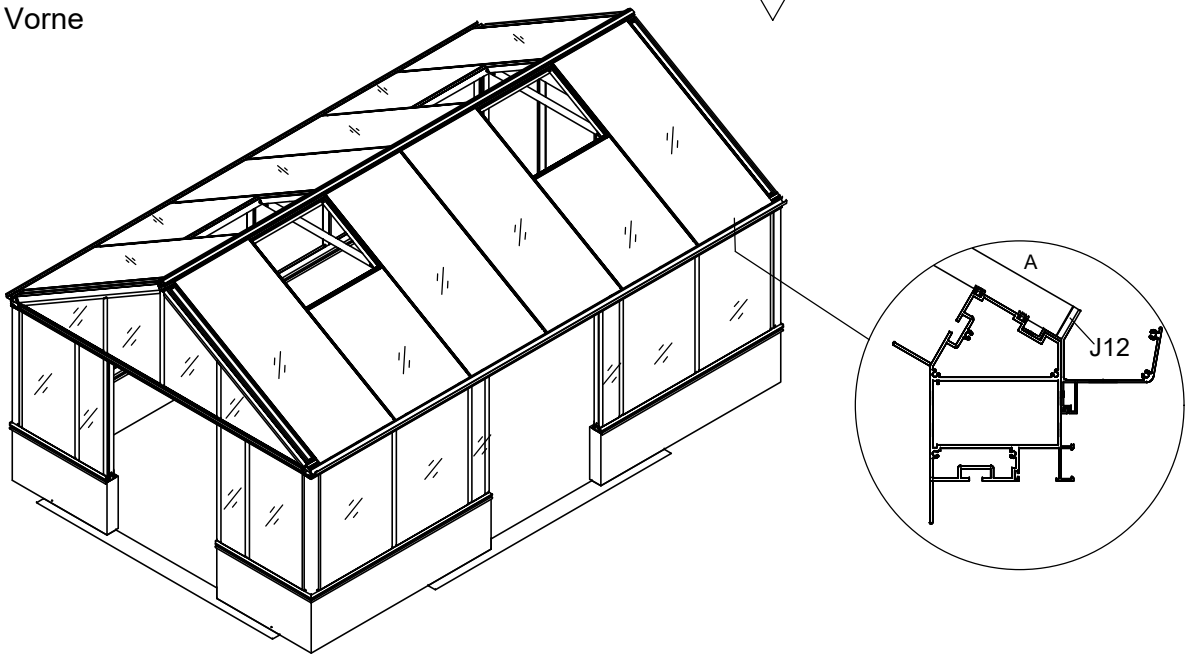


| 3711 | 3712 | 3713 |
|---|---|---|
| 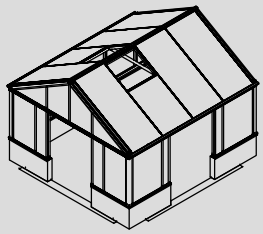 | 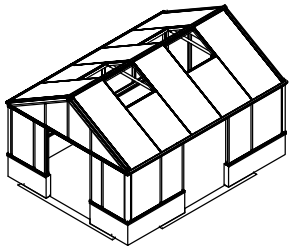 | 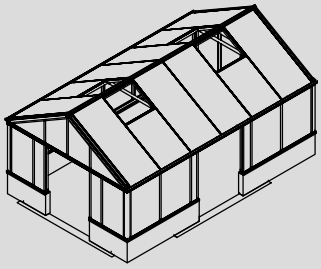 |

| Part | NO. | QTY. | | | Length(MM) |
|---|---|---|---|---|---|
| | | 3711 | 3712 | 3713 | |
| | 41X-Y101 | 8 | 10 | 12 | 980 |

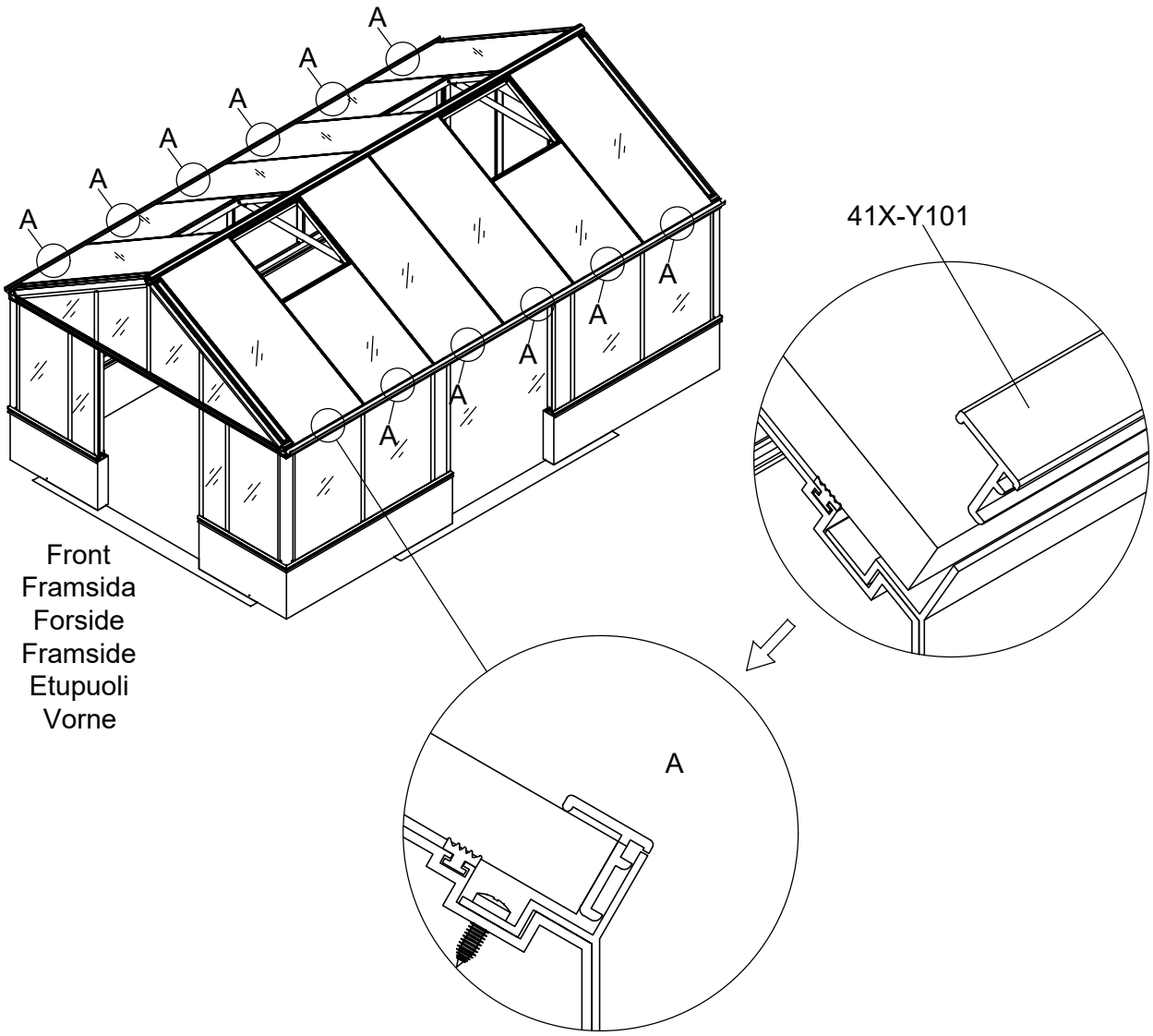


| 3711 | 3712 | 3713 |
|---|---|---|
| 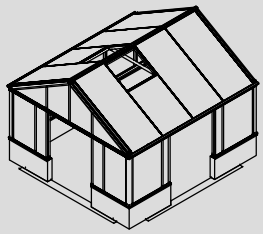 | 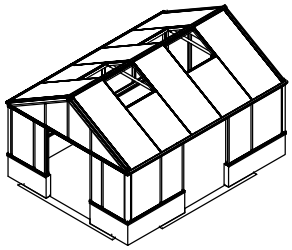 | 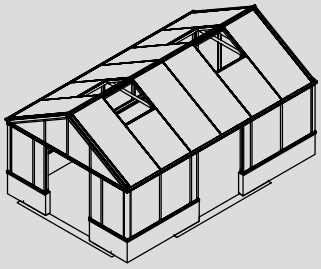 |

| Part | NO. | QTY. | | | Length(MM) |
|---|---|---|---|---|---|
| | | 3711 | 3712 | 3713 | |
| | 51X-Y06 | 6 | 8 | 10 | 2216 |
| | 41X-Y07 | 2 | 4 | 4 | 950 |
| | 7B33-019 | 6 | 8 | 10 | PCS |
| | 51X-Y06B | 4 | | | 2216 |
| | 7B33-017 | 2 | | | PCS |
| | 7B33-018 | 2 | | | PCS |

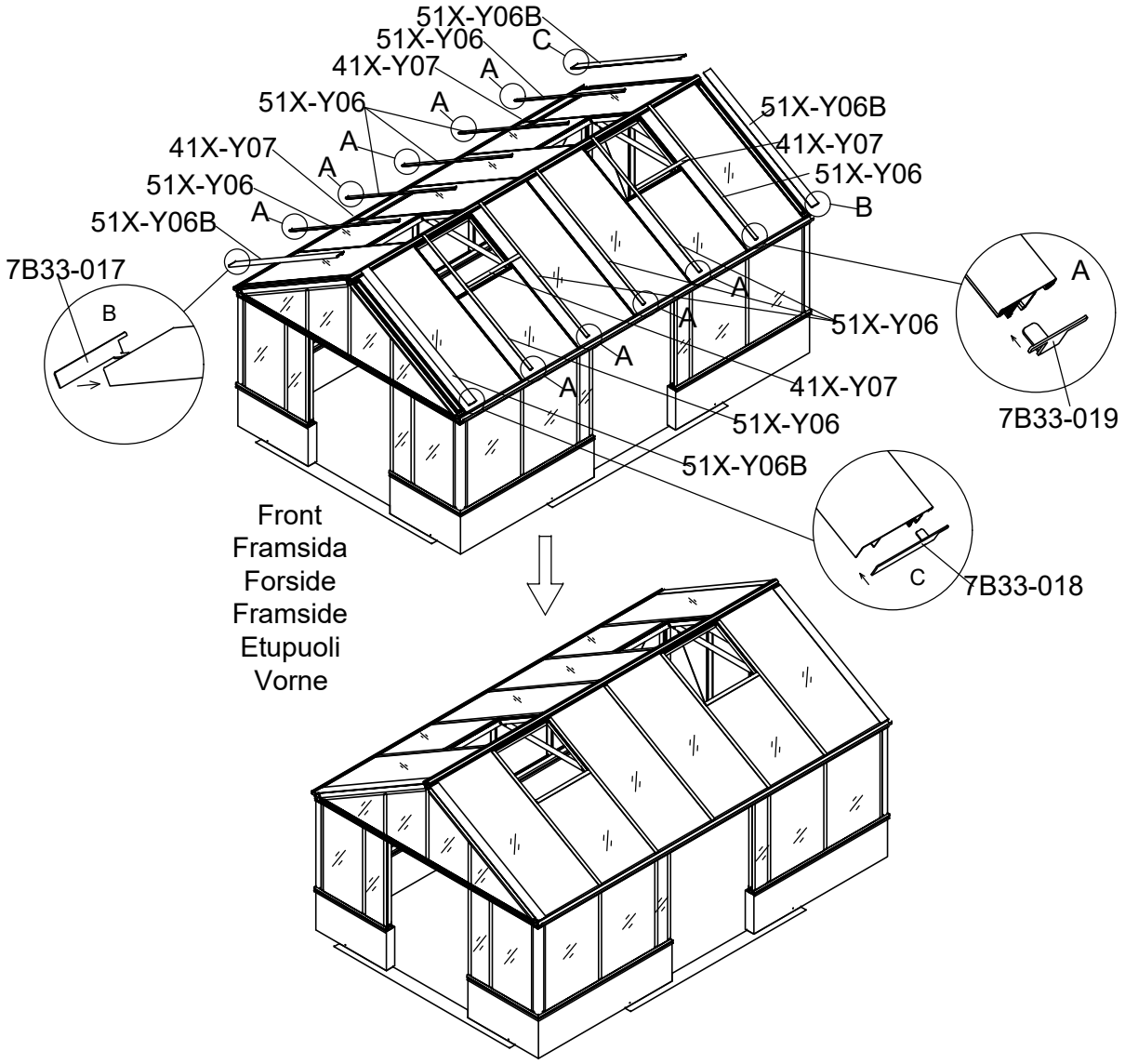


| 3711 | 3712 | 3713 |
|---|---|---|
| 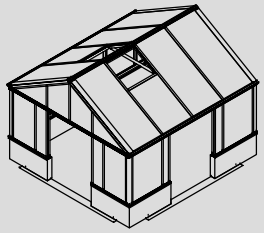 | 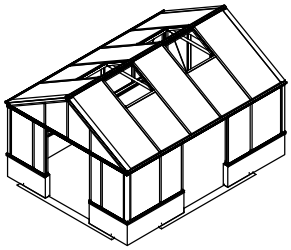 | 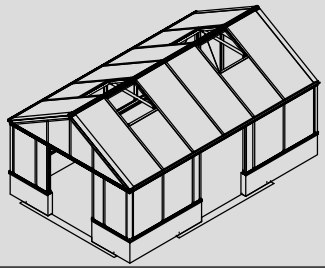 |

| Part | NO. | QTY. | | | Length(MM) |
|---|---|---|---|---|---|
| | | 3711 | 3712 | 3713 | |
| | 7C28-004 | 10 | 12 | 14 | PCS |
| | Z4.2-50 | 10 | 12 | 14 | PCS |

| Part | Product | NO. | Length(MM) | QTY. | Code |
|---|---|---|---|---|---|
| | 3711 | 41X-Y63-4A | 4207 | 2 | A008 |
| | 3712 | 41X-Y63-5A | 5208 | | |
| | 3713 | 41X-Y63-6A | 6209 | | |

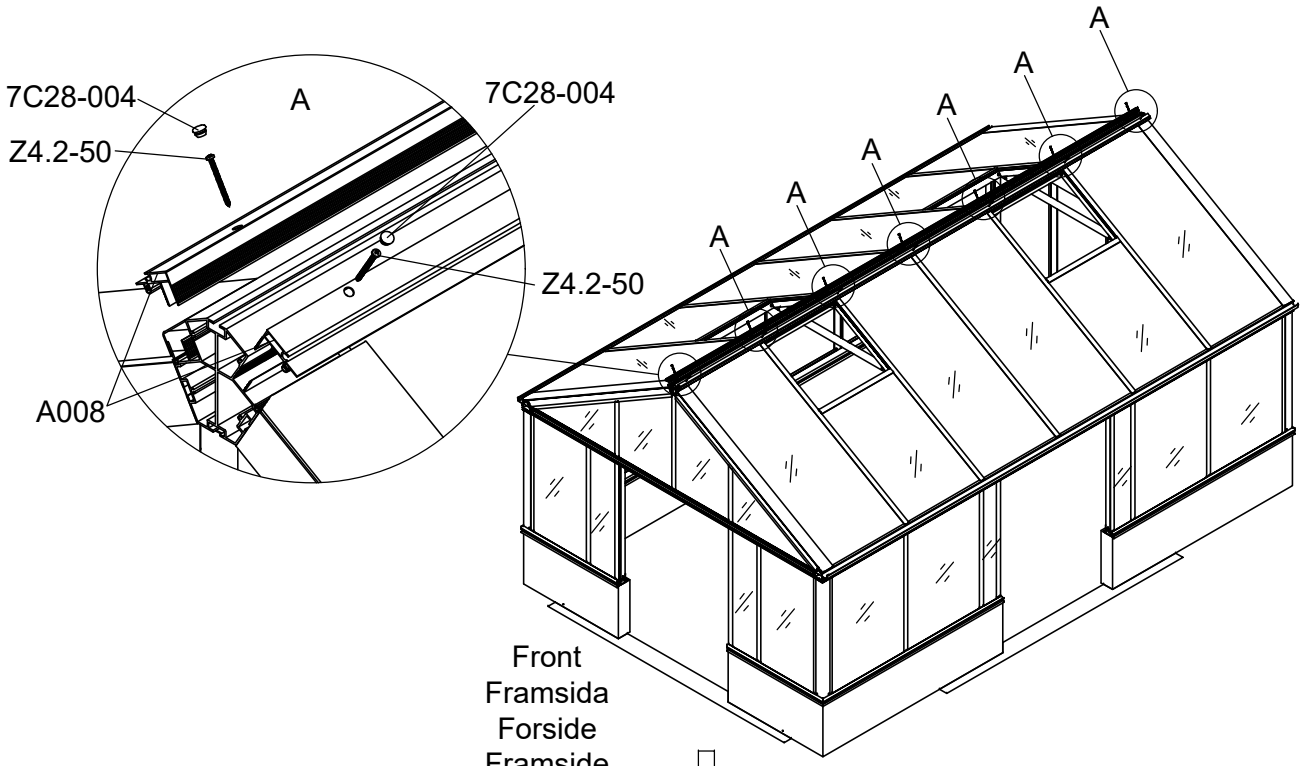


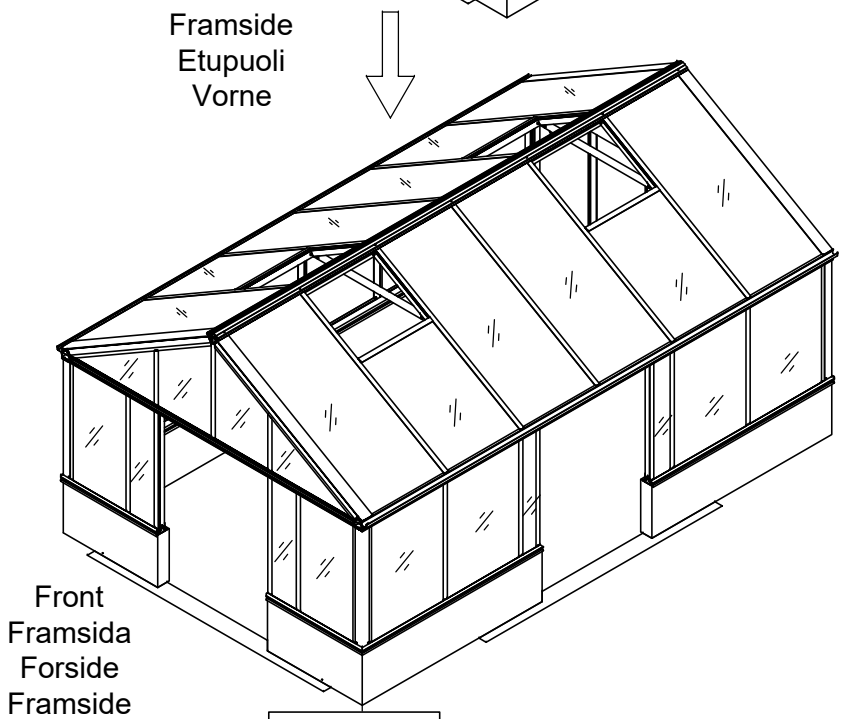

| Part | NO. | QTY. | Length(MM) |
|---|---|---|---|
| | 664×1844 | 3 | 1844 |
| | 41A-Y90 | 1 | 1958 |
| | 41A-Y91R | 1 | 1958 |
| | 41X-Y92R | 1 | 776 |
| | 41X-Y93 | 1 | 776 |
| | W03 | 4 | 30 |
| | W04 | 8 | PCS |
| | J12 | 3 | PCS |

| Part | NO. | QTY. | Length(MM) | CTN NO. |
|---|---|---|---|---|
| | 41A-Y90 | 2 | 1958 | 3040P-TD |
| | 41A-Y91R | 2 | 1958 | 3040P-TD |
| | 41X-Y92R | 2 | 776 | 3040P-TD |
| | 41X-Y93 | 2 | 776 | 3040P-TD |
| | W03 | 8 | 30 | 3040P-TD |
| | W04 | 16 | PCS | 3040P-TD |
| | J12 | 6 | PCS | 3040P-TD |

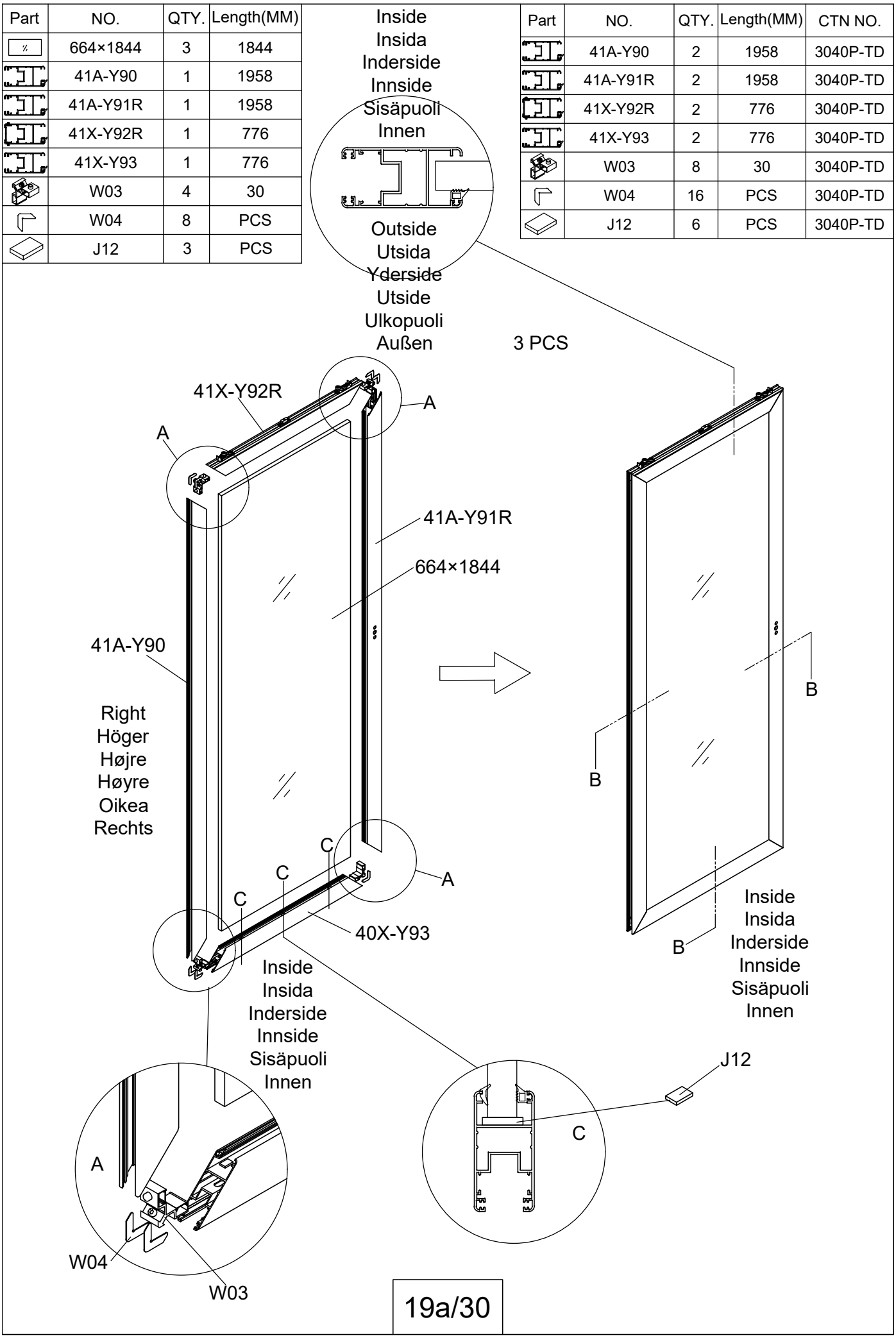

| Part | NO. | QTY. | Length(MM) |
|---|---|---|---|
| | 664×1844 | 3 | 1844 |
| | 41A-Y90 | 1 | 1958 |
| | 41A-Y91L | 1 | 1958 |
| | 41X-Y92L | 1 | 776 |
| | 41X-Y93 | 1 | 776 |
| | W03 | 4 | 30 |
| | W04 | 8 | PCS |
| | J12 | 3 | PCS |

| Part | NO. | QTY. | Length(MM) | CTN NO. |
|---|---|---|---|---|
| | 41X-Y90 | 2 | 1922 | 3040P-TD |
| | 41X-Y91L | 2 | 1922 | 3040P-TD |
| | 41X-Y92L | 2 | 776 | 3040P-TD |
| | 41X-Y93 | 2 | 776 | 3040P-TD |
| | W03 | 8 | 30 | 3040P-TD |
| | W04 | 16 | PCS | 3040P-TD |
| | J12 | 6 | PCS | 3040P-TD |

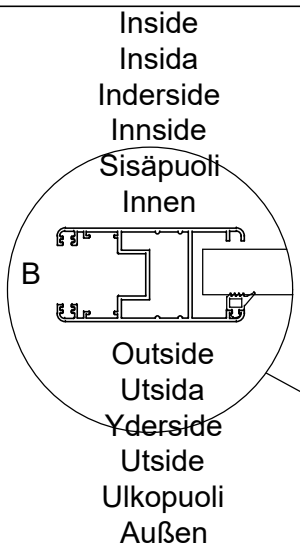


3 PCS

41X-Y92L

A

A

41A-Y90

41A-Y91L

664×1844

Left
Vänster
Venstre
Venstre
Vasen
Links

B

B

B

C

C

C

A

41X-Y93

Inside
Insida
Inderside
Innside
Sisäpuoli
Innen

Inside
Insida
Inderside
Innside
Sisäpuoli
Innen

J12

C

A

W04

W03

| Part | NO. | QTY. | Length(MM) |
|---|---|---|---|
| | MCJT002 | 13M | |

| Part | NO. | QTY. | Length(MM) | CTN NO. |
|---|---|---|---|---|
| | MCJT002 | 26M | | 3040P-TD |

3 PCS

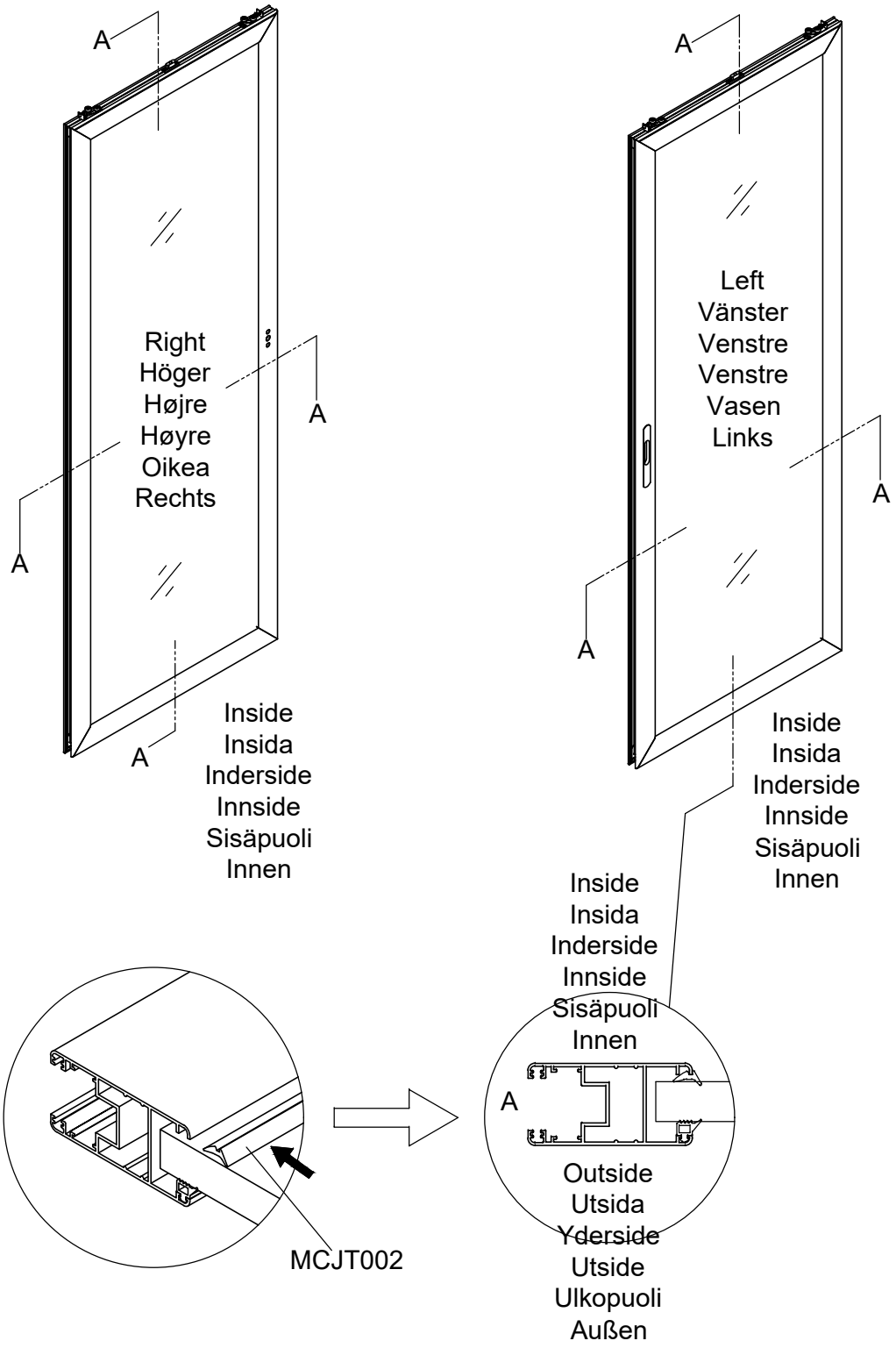

| Part | NO. | QTY. | Length(MM) |
|---|---|---|---|
| | 41A-Y97-R | 1 | 1951 |
| | 41A-Y97-B | 1 | 1918 |
| | 41A-Y97-A | 1 | 1918 |
| | Z4.2-13 | 5 | PCS |

| Part | NO. | QTY. | Length(MM) | CTN NO. |
|---|---|---|---|---|
| | 41A-Y97-R | 2 | 1951 | 3040P-TD |
| | 41A-Y97-B | 2 | 1918 | 3040P-TD |
| | 41A-Y97-A | 2 | 1918 | 3040P-TD |
| | Z4.2-13 | 10 | PCS | 3040P-TD |

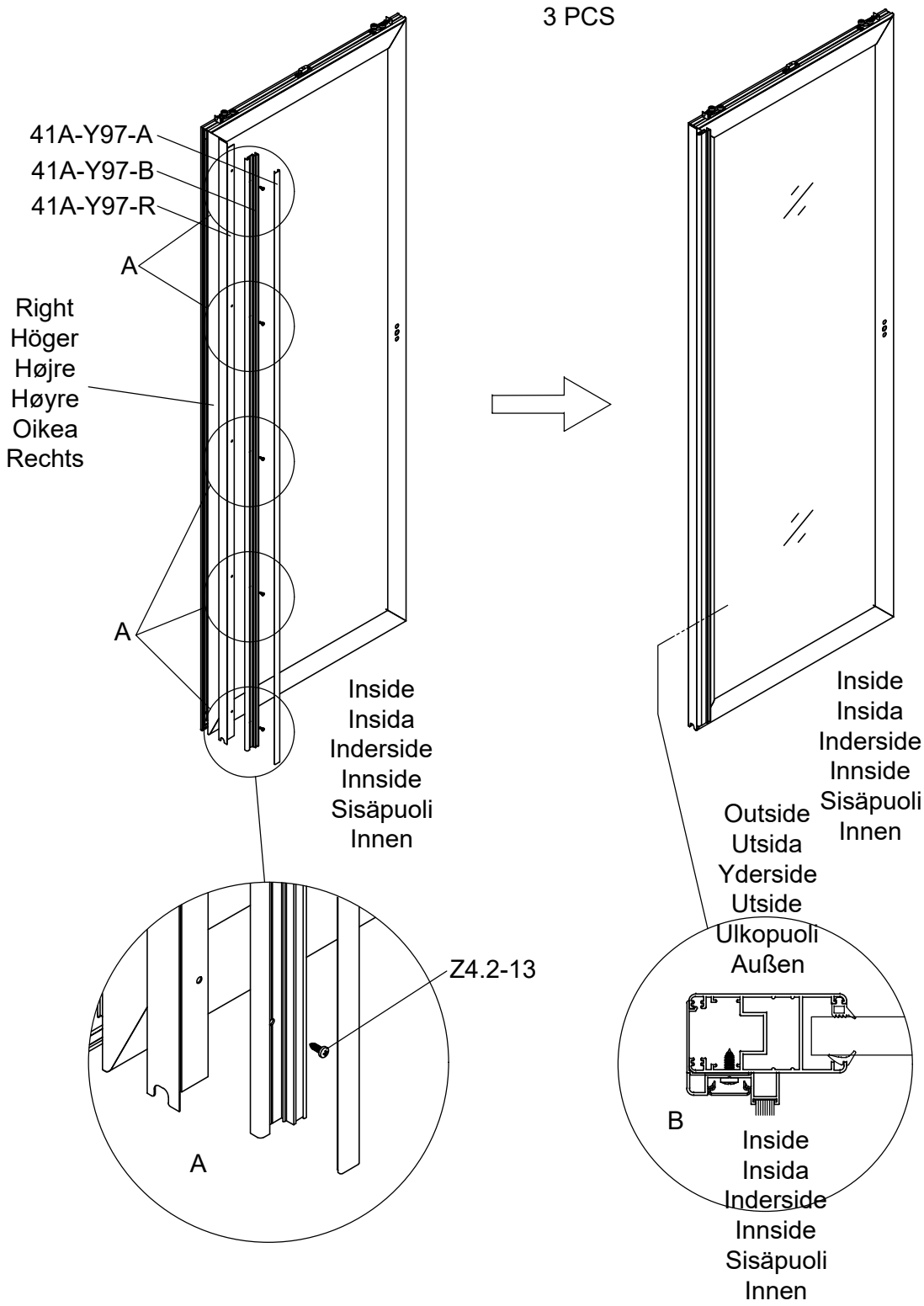

| Part | NO. | QTY. | Length(MM) |
|---|---|---|---|
| | 41A-Y97-L | 1 | 1951 |
| | 41A-Y97-B | 1 | 1918 |
| | 41A-Y97-A | 1 | 1918 |
| | Z4.2-13 | 5 | PCS |

| Part | NO. | QTY. | Length(MM) | CTN NO. |
|---|---|---|---|---|
| | 41A-Y97-L | 2 | 1951 | 3040P-TD |
| | 41A-Y97-B | 2 | 1918 | 3040P-TD |
| | 41A-Y97-A | 2 | 1918 | 3040P-TD |
| | Z4.2-13 | 10 | PCS | 3040P-TD |

3 PCS

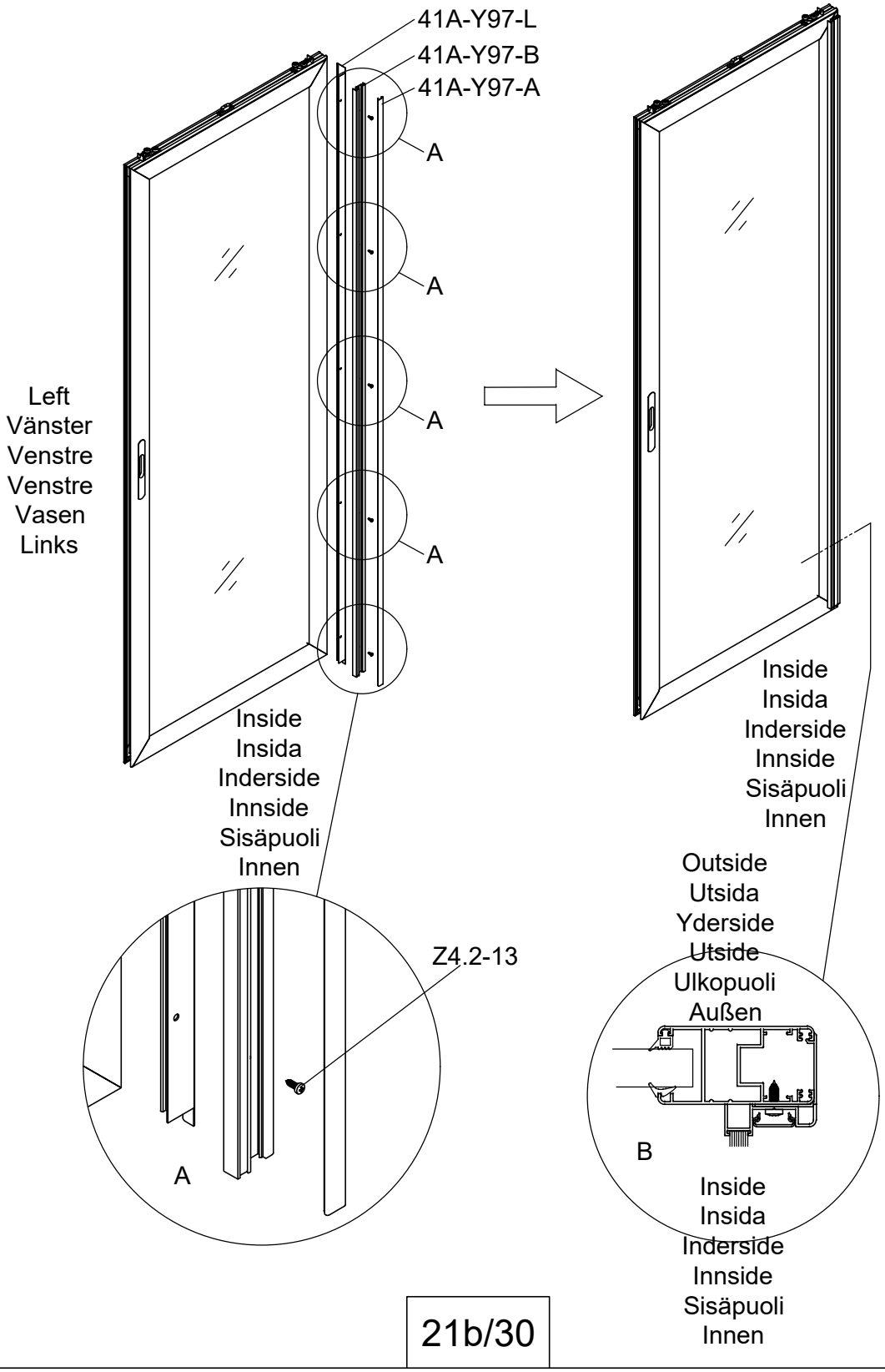

| Part | NO. | QTY. | Length(MM) |
|---|---|---|---|
| | 41A-Y94 | 1 | 1946 |
| | NSST120 | 2.0M | |
| | T04 | 2 | PCS |
| | Z4.2-38 | 4 | PCS |
| | Z3.5-25 | 4 | PCS |

| Part | NO. | QTY. | Length(MM) | CTN NO. |
|---|---|---|---|---|
| | 41A-Y94 | 2 | 1946 | 3040P-TD |
| | NSST120 | 4.0M | | 3040P-TD |
| | T04 | 4 | PCS | 3040P-TD |
| | Z4.2-38 | 8 | PCS | 3040P-TD |
| | Z3.5-25 | 8 | PCS | 3040P-TD |

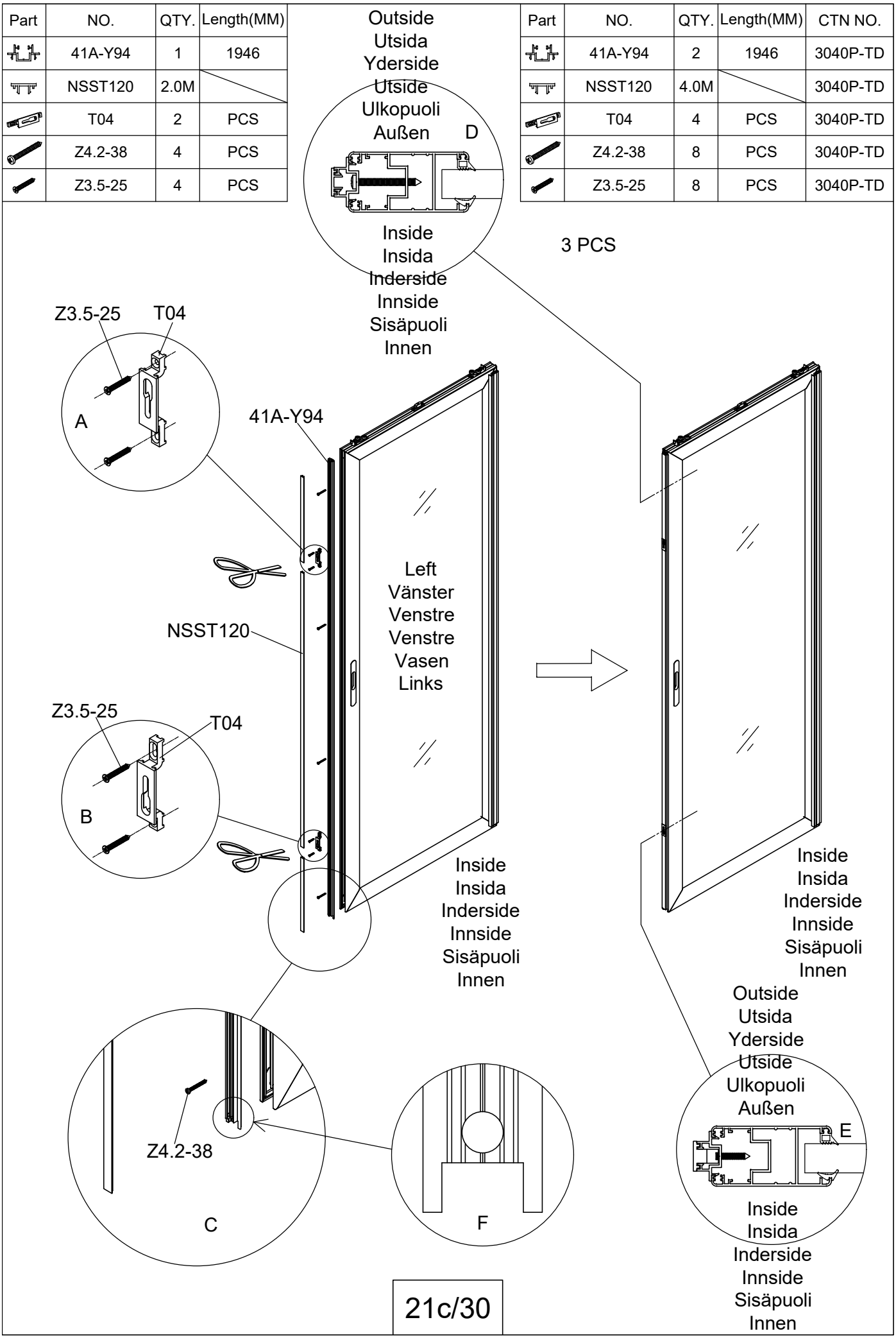

| Part | NO. | QTY. | Length(MM) |
|---|---|---|---|
| | 41A-Y98-R | 1 | 2000 |
| | 41A-Y98-L | 1 | 2000 |
| | M8-35 | 2 | PCS |
| | Si8-35 | 2 | PCS |
| | 7B33-020 | 2 | PCS |
| | Si6-35 | 4 | PCS |
| | J05 | 4 | PCS |

| Part | NO. | QTY. | Length(MM) | CTN NO. |
|---|---|---|---|---|
| | 41A-Y98-R | 1 | 2000 | 3040P-TD |
| | 41A-Y98-L | 1 | 2000 | 3040P-TD |
| | M8-35 | 2 | PCS | 3040P-TD |
| | Si8-35 | 2 | PCS | 3040P-TD |
| | 7B33-020 | 2 | PCS | 3040P-TD |
| | Si6-35 | 4 | PCS | 3040P-TD |
| | J05 | 4 | PCS | 3040P-TD |

| Code | Length(MM) | | |
|---|---|---|---|
| | 3711 | 3712 | 3713 |
| L3 | 653 | 1154 | 1654 |

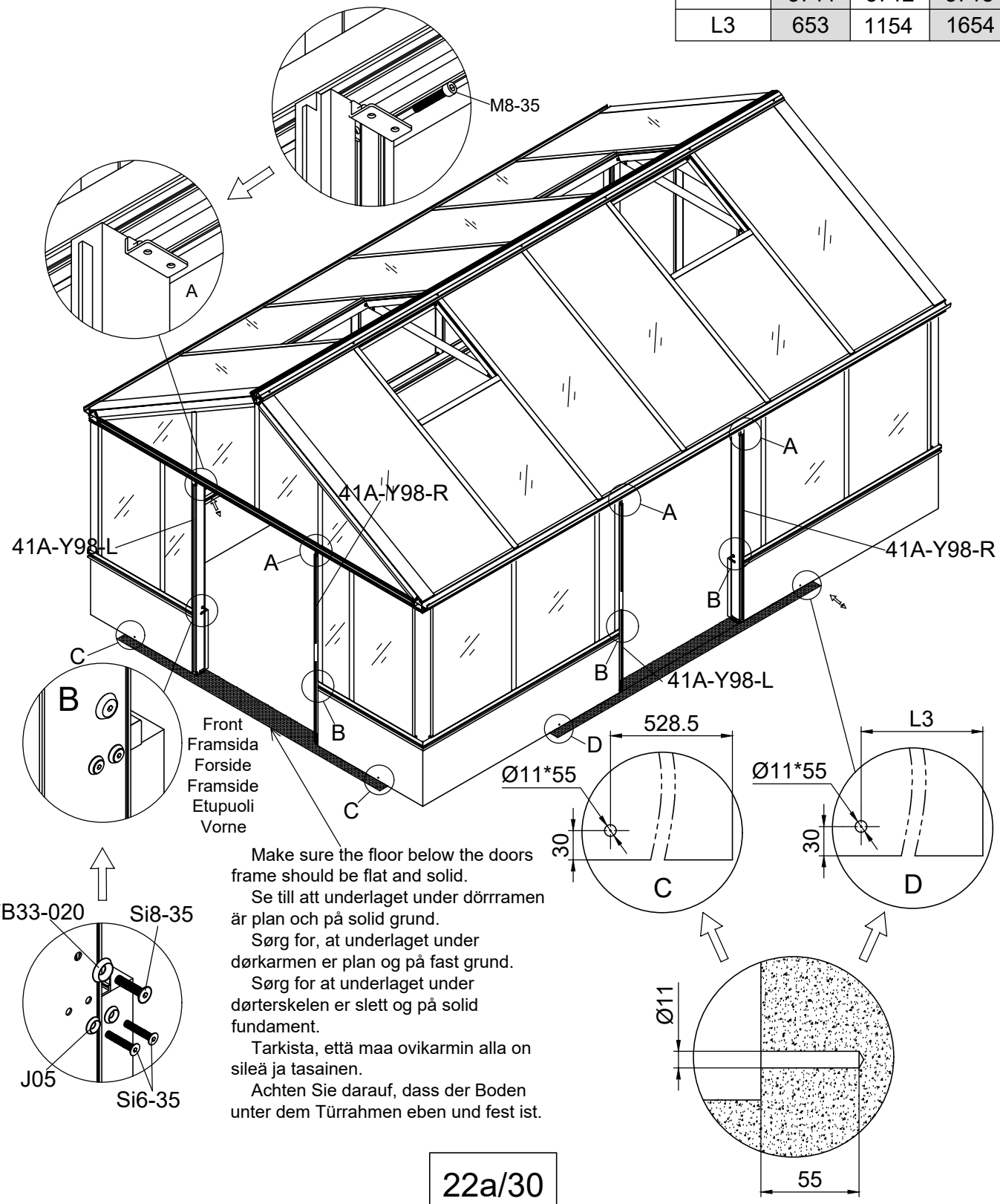


Make sure the floor below the doors frame should be flat and solid.

Se till att underlaget under dörrramen är plan och på solid grund.

Sørg for, at underlaget under dørkarmen er plan og på fast grund.

Sørg for at underlaget under dørterskelen er slett og på solid fundament.

Tarkista, että maa ovikarmin alla on sileä ja tasainen.

Achten Sie darauf, dass der Boden unter dem Türrahmen eben und fest ist.

| Part | NO. | QTY. | Length(MM) | CTN NO. |
|---|---|---|---|---|
| | 41A-Y98-R | 1 | 2000 | 3040P-TD |
| | 41A-Y98-L | 1 | 2000 | 3040P-TD |
| | M8-35 | 2 | PCS | 3040P-TD |
| | Si8-35 | 2 | PCS | 3040P-TD |
| | 7B33-020 | 2 | PCS | 3040P-TD |
| | Si6-35 | 4 | PCS | 3040P-TD |
| | J05 | 4 | PCS | 3040P-TD |

| Code | Length(MM) | | |
|---|---|---|---|
| | 3711 | 3712 | 3713 |
| L3 | 653 | 1154 | 1654 |

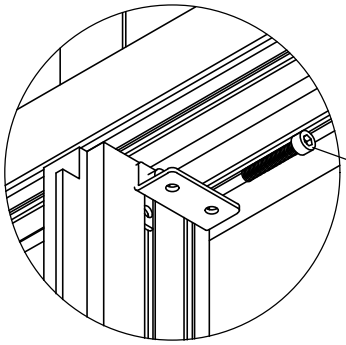





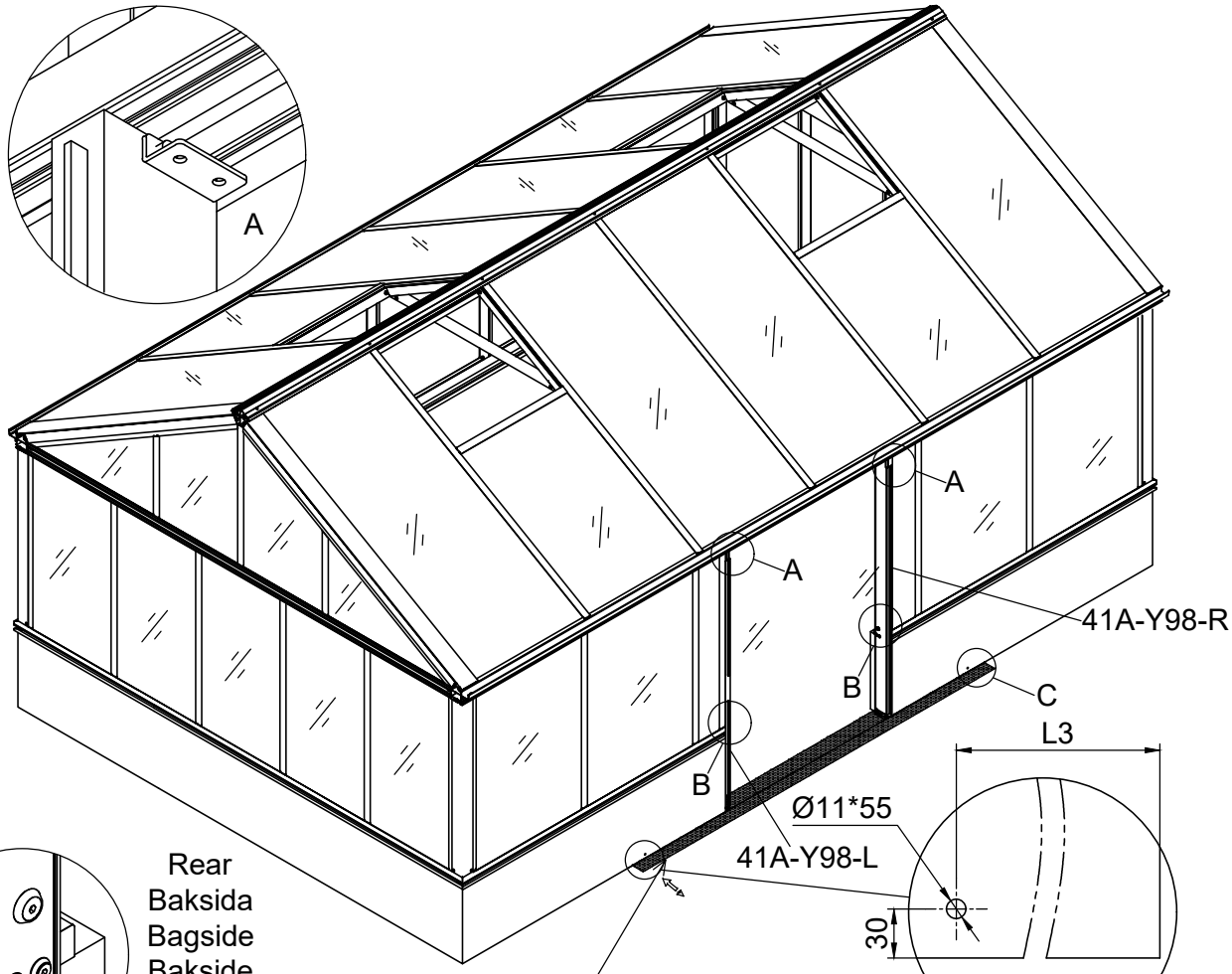


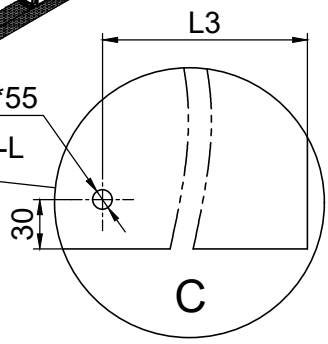


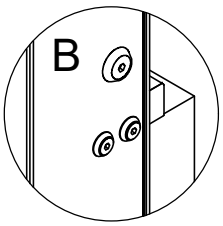


Rear
Baksida
Bagside
Bakside
Takapuoli
Hinten

Make sure the floor below the doors frame should be flat and solid.

Se till att underlaget under dörrramen är plan och på solid grund.

Sørg for, at underlaget under dørkarmen er plan og på fast grund.

Sørg for at underlaget under dørterskelen er slett og på solid fundament.

Tarkista, että maa ovikarmin alla on sileä ja tasainen.

Achten Sie darauf, dass der Boden unter dem Türrahmen eben und fest ist.

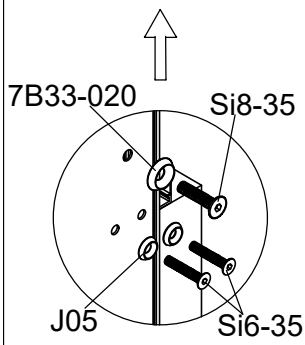


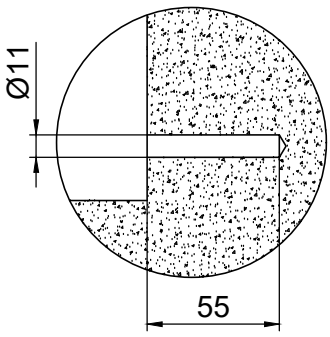

| Part | NO. | QTY. | Length(MM) |
|---|---|---|---|
| | 41A-Y99 | 1 | 1410 |
| | 41A-Y100 | 1 | 1410 |
| | Si6-16 | 8 | PCS |
| | J05 | 8 | PCS |
| | PS8-80 | 2 | PCS |

| Part | NO. | QTY. | Length(MM) | CTN NO. |
|---|---|---|---|---|
| | 41A-Y99 | 1 | 1410 | 3040P-TD |
| | 41A-Y100 | 1 | 1410 | 3040P-TD |
| | Si6-16 | 8 | PCS | 3040P-TD |
| | J05 | 8 | PCS | 3040P-TD |
| | PS8-80 | 2 | PCS | 3040P-TD |

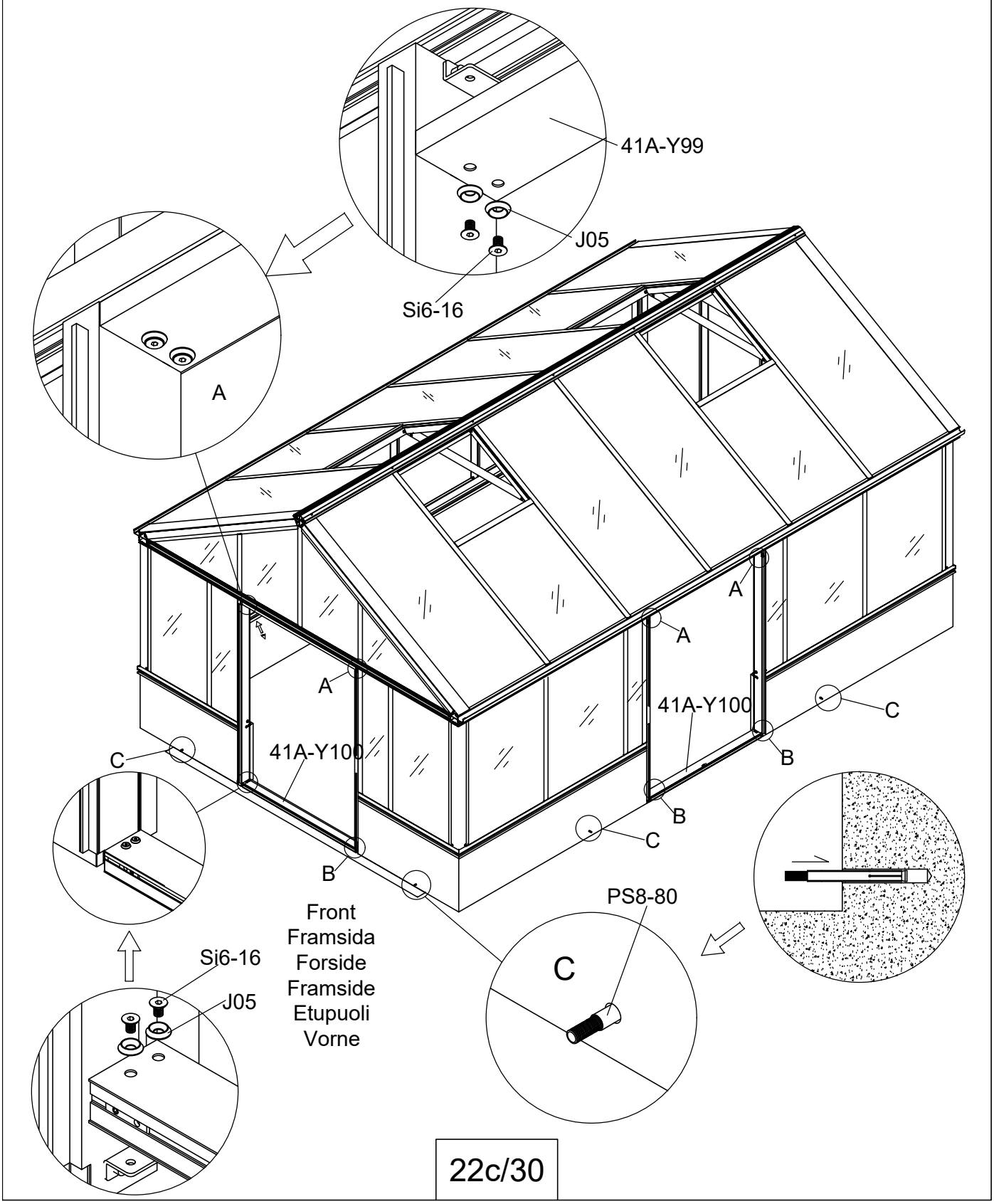

| Part | NO. | QTY. | Length(MM) | CTN NO. |
|---|---|---|---|---|
| | 41A-Y99 | 1 | 1410 | 3040P-TD |
| | 41A-Y100 | 1 | 1410 | 3040P-TD |
| | Si6-16 | 8 | PCS | 3040P-TD |
| | J05 | 8 | PCS | 3040P-TD |
| | PS8-80 | 2 | PCS | 3040P-TD |

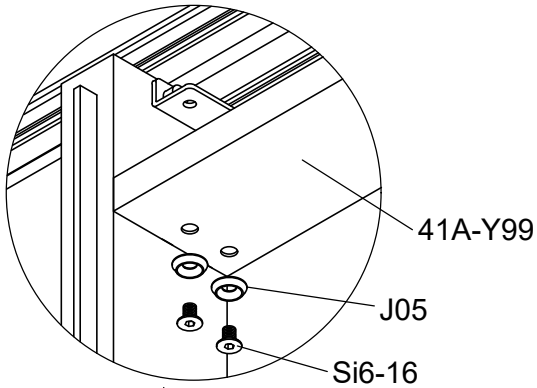


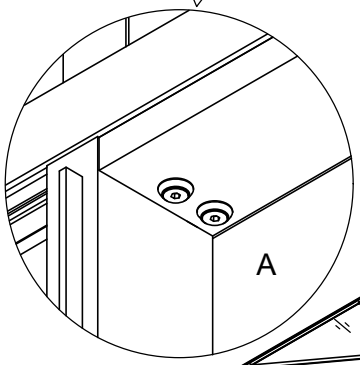


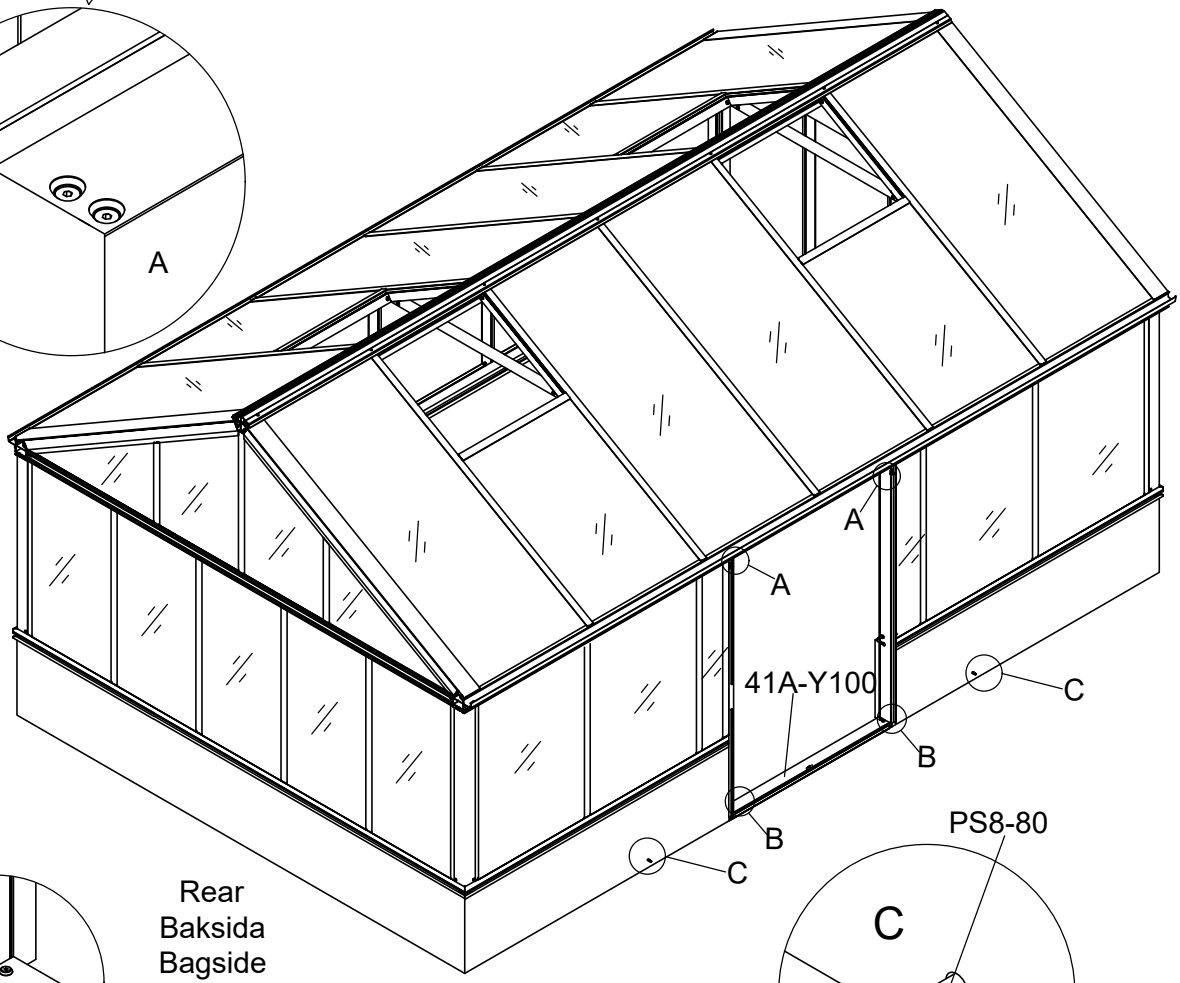


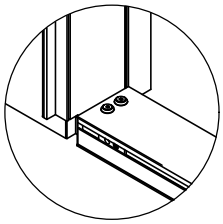

Rear
Baksida
Bagside
Bakside
Takapuoli
Hinten

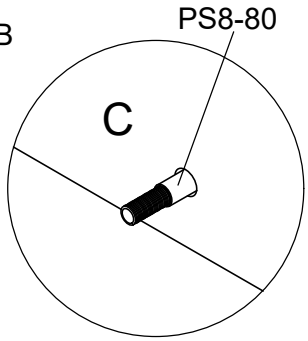


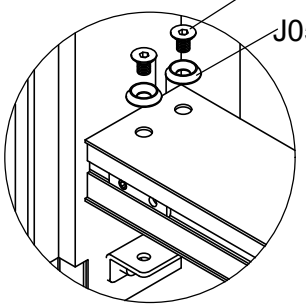


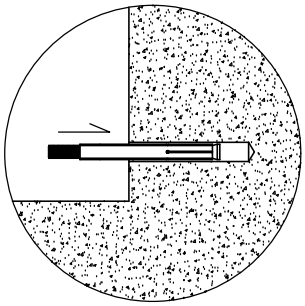

| Part | NO. | QTY. | Length(MM) |
|---|---|---|---|
| | 41A-Y64 | 1 | 3016 |
| | 41A-Y17 | 1 | 3120 |
| | 7C28-004 | 5 | PCS |
| | Z4.2-50 | 5 | PCS |
| | Si8-25 | 3 | PCS |
| | 7B33-020 | 3 | PCS |
| | 7C26-031 | 2 | PCS |

| Part | NO. | QTY. | Length(MM) | CTN NO. |
|---|---|---|---|---|
| | 41A-Y64 | 1 | 3016 | 3040P-TD |
| | 41A-Y17 | 1 | 3120 | 3040P-TD |
| | 7C28-004 | 5 | PCS | 3040P-TD |
| | Z4.2-50 | 5 | PCS | 3040P-TD |
| | Si8-25 | 3 | PCS | 3040P-TD |
| | 7B33-020 | 3 | PCS | 3040P-TD |
| | 7C26-031 | 2 | PCS | 3040P-TD |

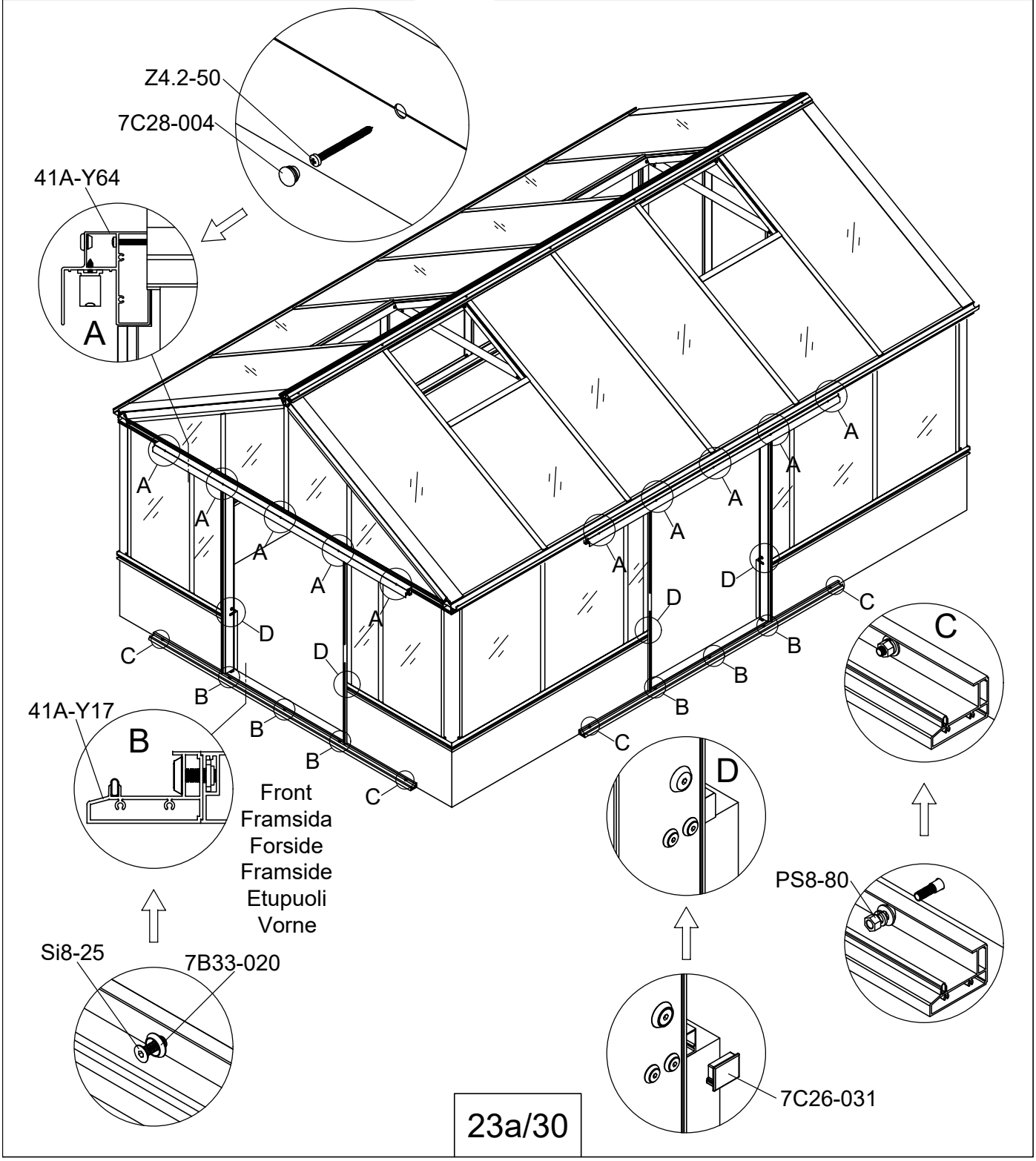

| Part | NO. | QTY. | Length(MM) | CTN NO. |
|---|---|---|---|---|
| | 41A-Y64 | 1 | 3016 | 3040P-TD |
| | 41A-Y17 | 1 | 3120 | 3040P-TD |
| | 7C28-004 | 5 | PCS | 3040P-TD |
| | Z4.2-50 | 5 | PCS | 3040P-TD |
| | Si8-25 | 3 | PCS | 3040P-TD |
| | 7B33-020 | 3 | PCS | 3040P-TD |
| | 7C26-031 | 2 | PCS | 3040P-TD |

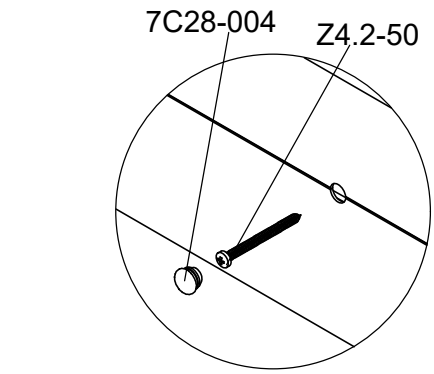


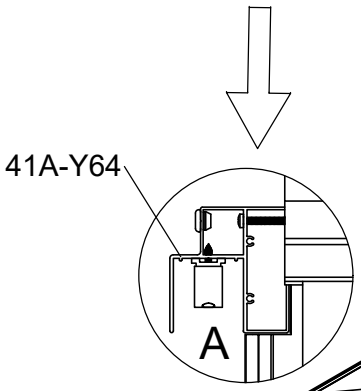


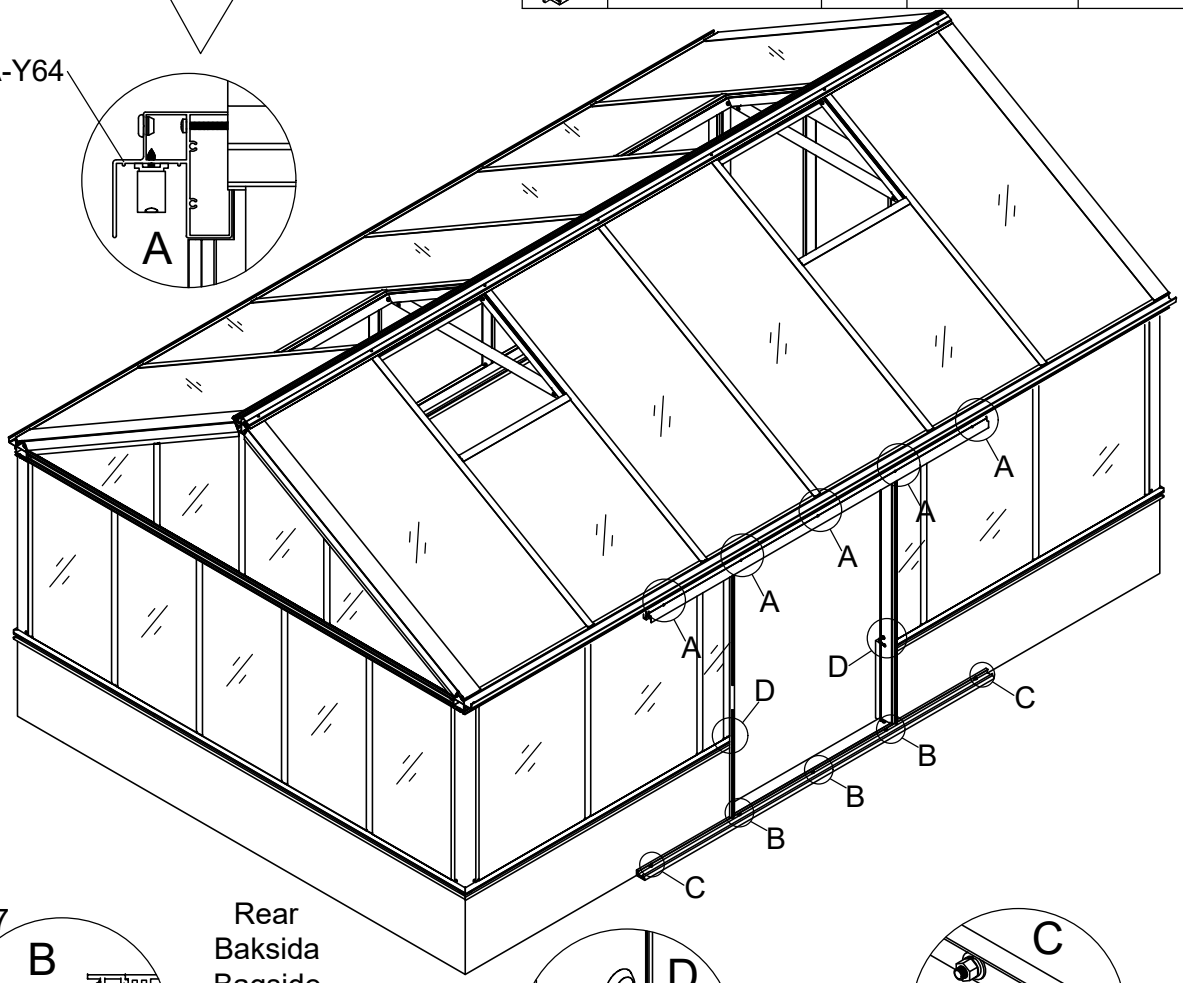


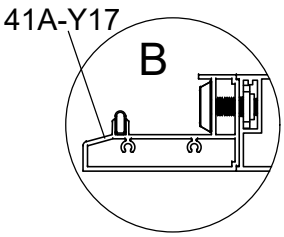


Rear
Baksida
Bagside
Bakside
Takapuoli
Hinten

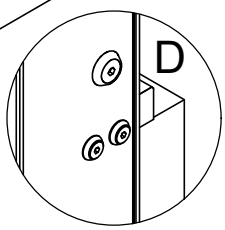


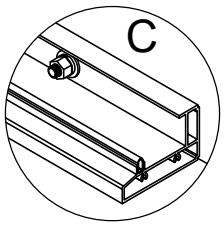


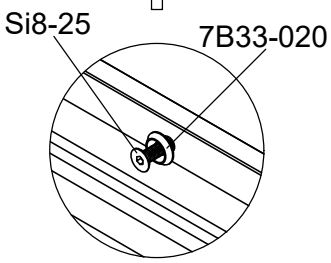


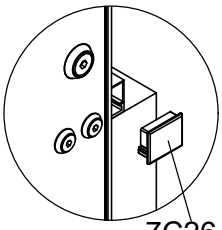


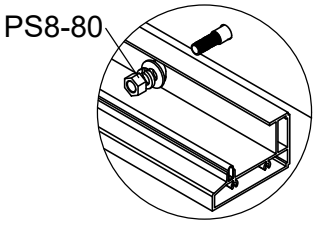

| Part | NO. | QTY. | Length(MM) |
|---|---|---|---|
| | 41A-Y98A-R | 1 | 1923 |
| | 41A-Y98A-L | 1 | 1923 |

| Part | NO. | QTY. | Length(MM) | CTN NO. |
|---|---|---|---|---|
| | 41A-Y98A-R | 1 | 1923 | 3040P-TD |
| | 41A-Y98A-L | 1 | 1923 | 3040P-TD |

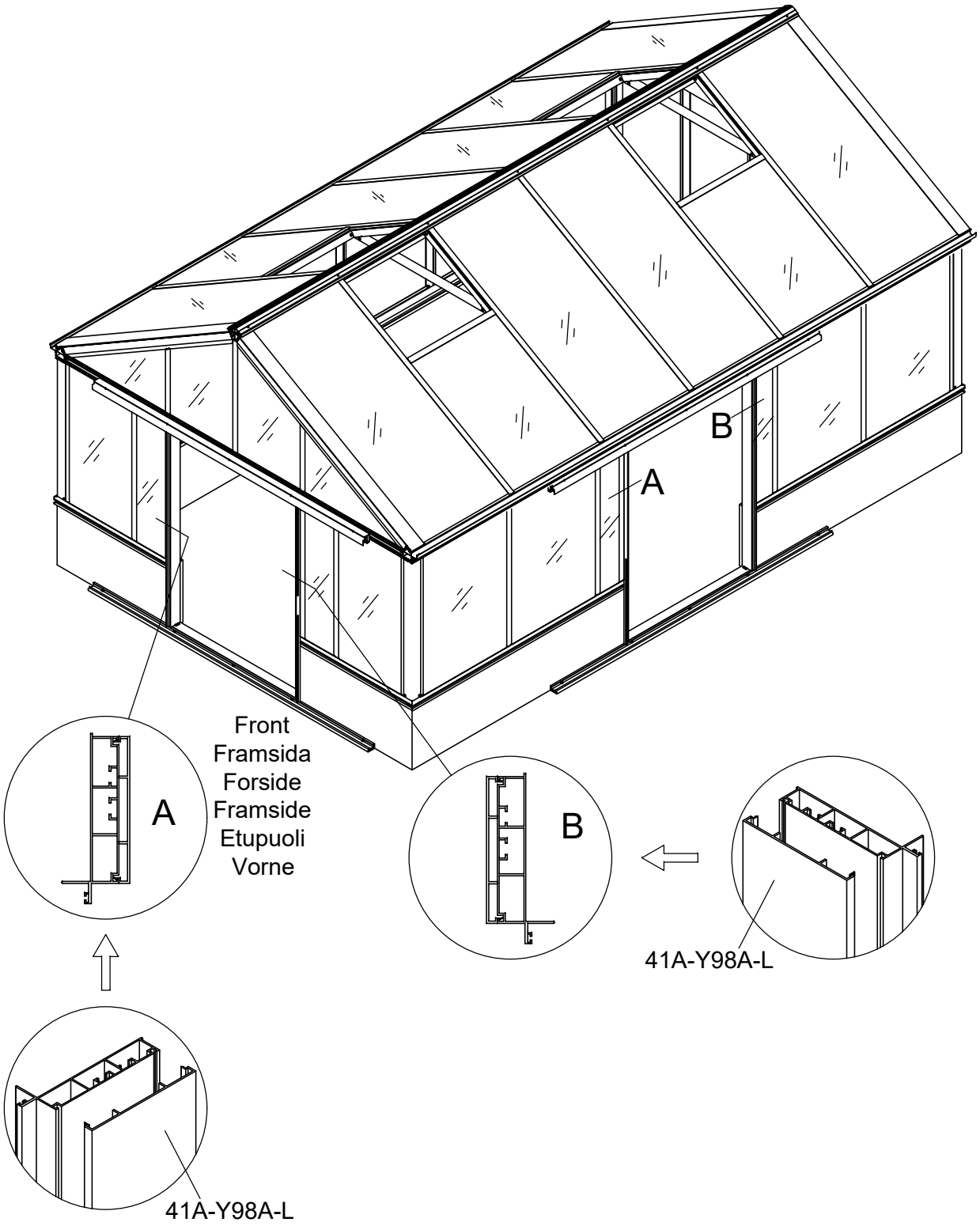

| Part | NO. | QTY. | Length(MM) | CTN NO. |
|---|---|---|---|---|
| | 41A-Y98A-R | 1 | 1923 | 3040P-TD |
| | 41A-Y98A-L | 1 | 1923 | 3040P-TD |

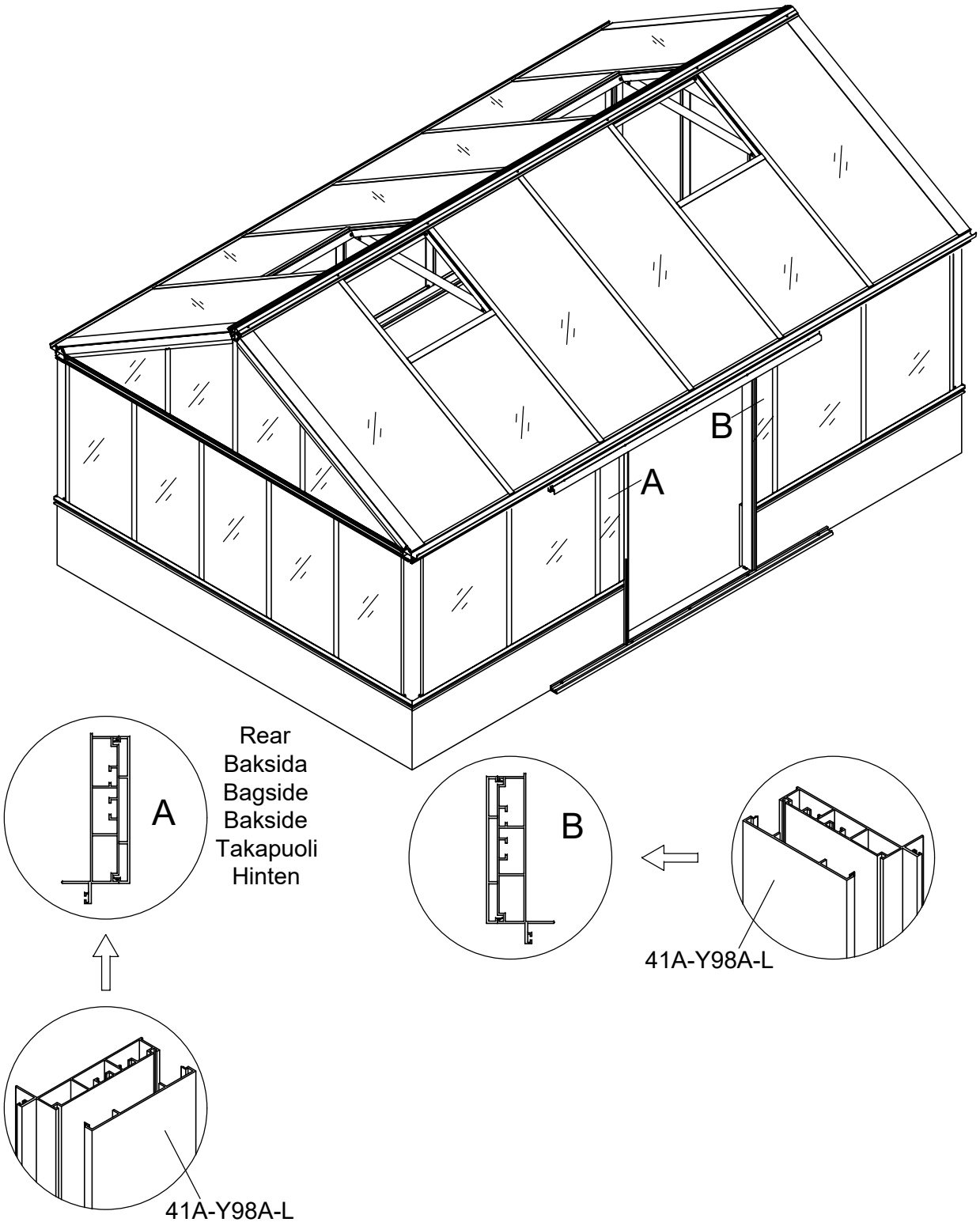

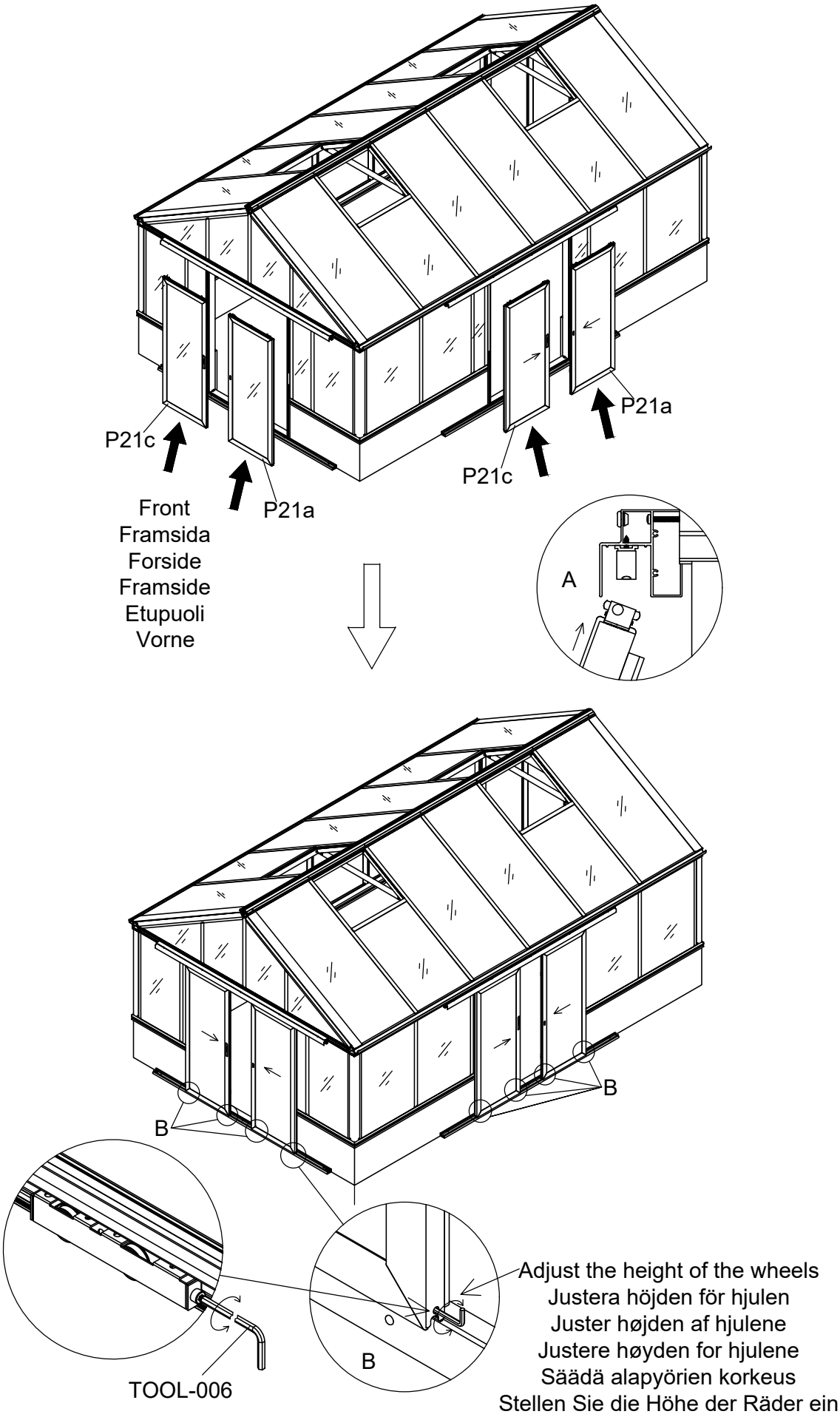
P21c
P21a
P21c
P21a
Front
Framsida
Forside
Framside
Etupuoli
Vorne
A
B
B
B
TOOL-006
Adjust the height of the wheels
Justera höjden för hjulen
Juster højden af hjulene
Justere høyden for hjulene
Säädä alapyörien korkeus
Stellen Sie die Höhe der Räder ein

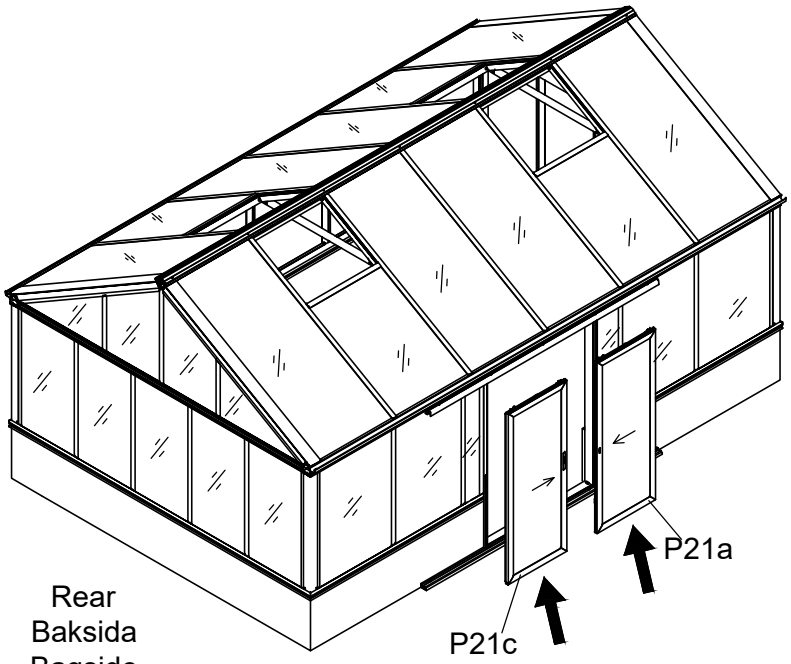


Rear
Baksida
Bagside
Bakside
Takapuoli
Hinten

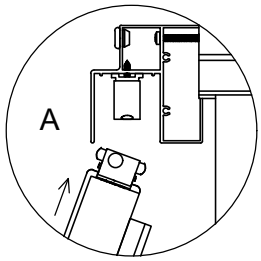


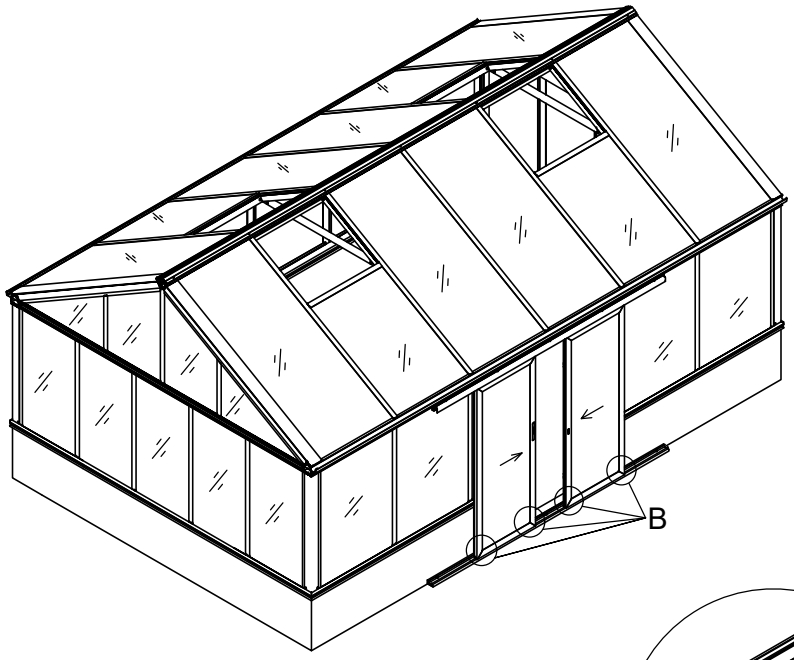


Adjust the height of the wheels
Justera höjden för hjulen
Juster højden af hjulene
Justere høyden for hjulene
Säädä alapyörien korkeus
Stellen Sie die Höhe der Räder ein

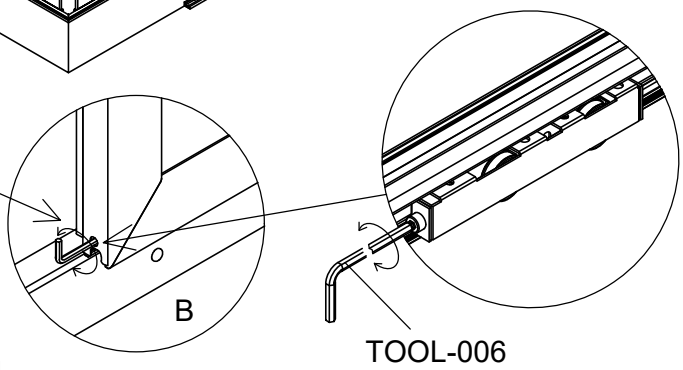

| Part | NO. | QTY. | Length(MM) |
|---|---|---|---|
| | T01N | 2 | PCS |
| | T01A | 2 | PCS |
| | J02 | 4 | PCS |
| | 7B33-049 | 2 | PCS |
| | 7B33-050 | 2 | PCS |
| | 7B33-051 | 2 | PCS |
| | 7B33-052 | 2 | PCS |
| | M4-40 | 4 | PCS |
| | Mi4-17 | 4 | PCS |
| | Z3.5-25 | 8 | PCS |
| | Za4.2-13 | 16 | PCS |

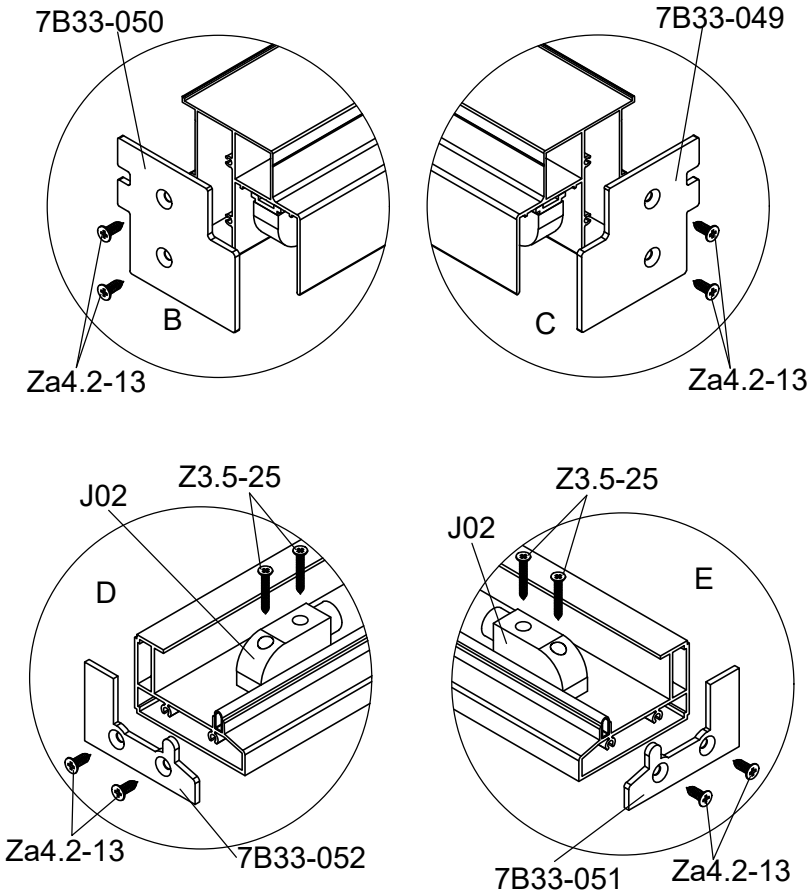


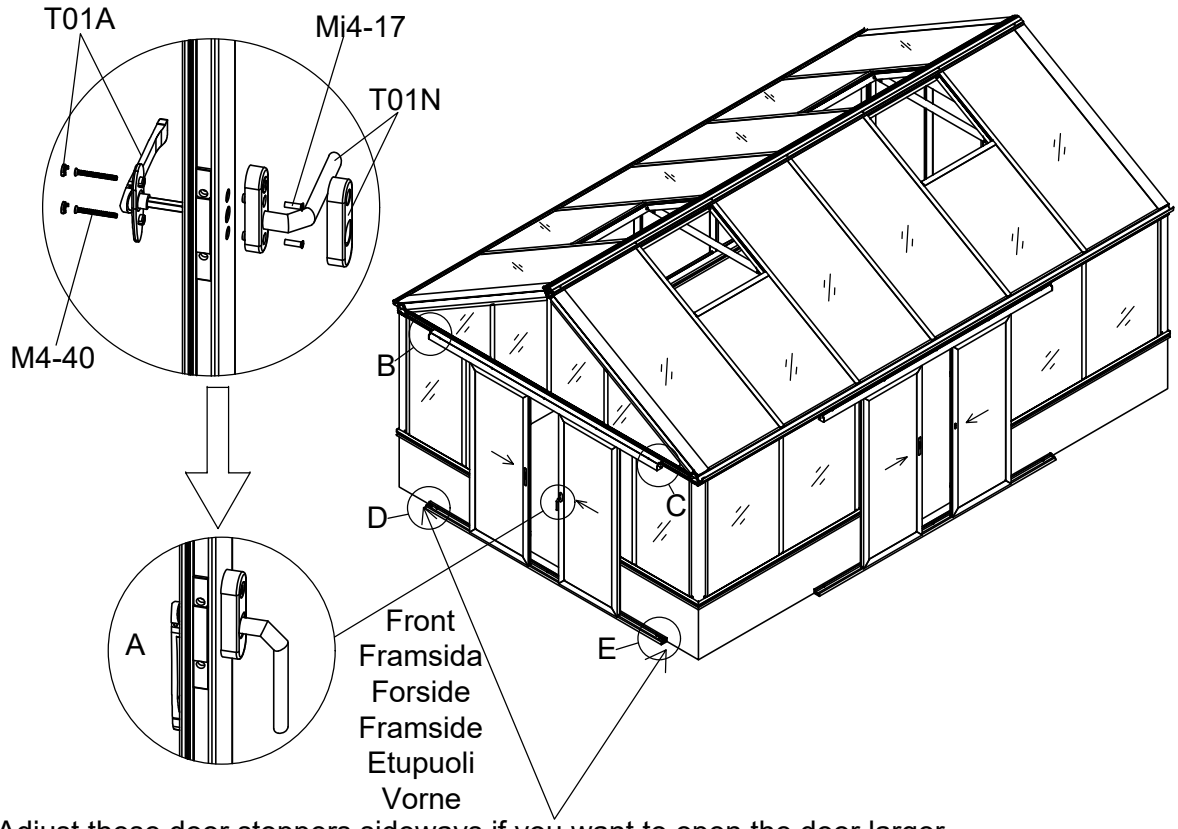


Adjust these door stoppers sideways if you want to open the door larger.
Justera avstånden av dörrstoppen i sidled om ni vill kunna öppna dörrarna ännu mer.
Justere dørstoppene sidelæns, for at give større åbning af døren.
Juster avstanden av dørstopperen sideveis om du vil kunne åpne døren ennå mer.
Säädä liukuovien stoppareiden etäisyys sivusuunnassa, mikäli haluat ovien avautuvan enemmän.
Stellen Sie den Türstopper seitlich ein, wenn Sie die Tür größer öffnen möchten.

| Part | NO. | QTY. | Length(MM) | CTN NO. |
|---|---|---|---|---|
| | T01N | 1 | PCS | 3040P-TD |
| | T01A | 1 | PCS | 3040P-TD |
| | J02 | 2 | PCS | 3040P-TD |
| | 7B33-049 | 1 | PCS | 3040P-TD |
| | 7B33-050 | 1 | PCS | 3040P-TD |
| | 7B33-051 | 1 | PCS | 3040P-TD |
| | 7B33-052 | 1 | PCS | 3040P-TD |
| | M4-40 | 2 | PCS | 3040P-TD |
| | Mi4-17 | 2 | PCS | 3040P-TD |
| | Z3.5-25 | 4 | PCS | 3040P-TD |
| | Za4.2-13 | 8 | PCS | 3040P-TD |

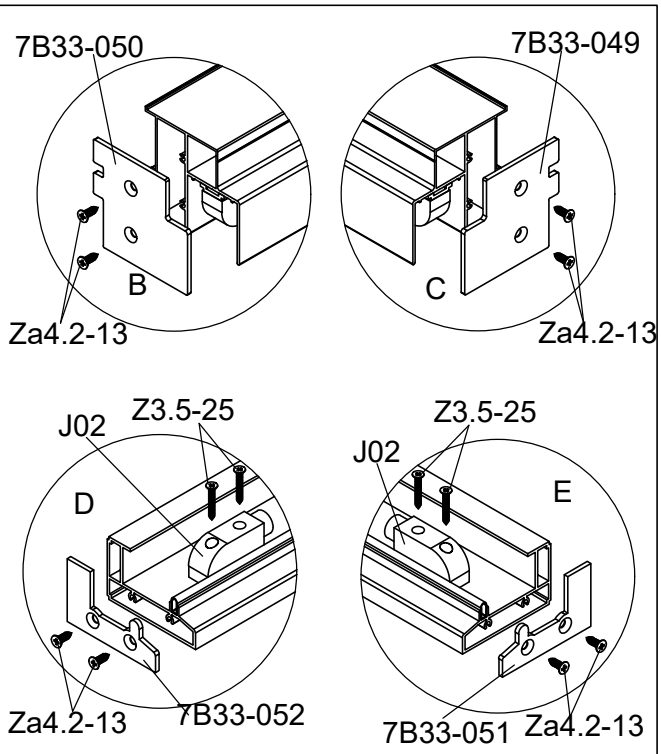


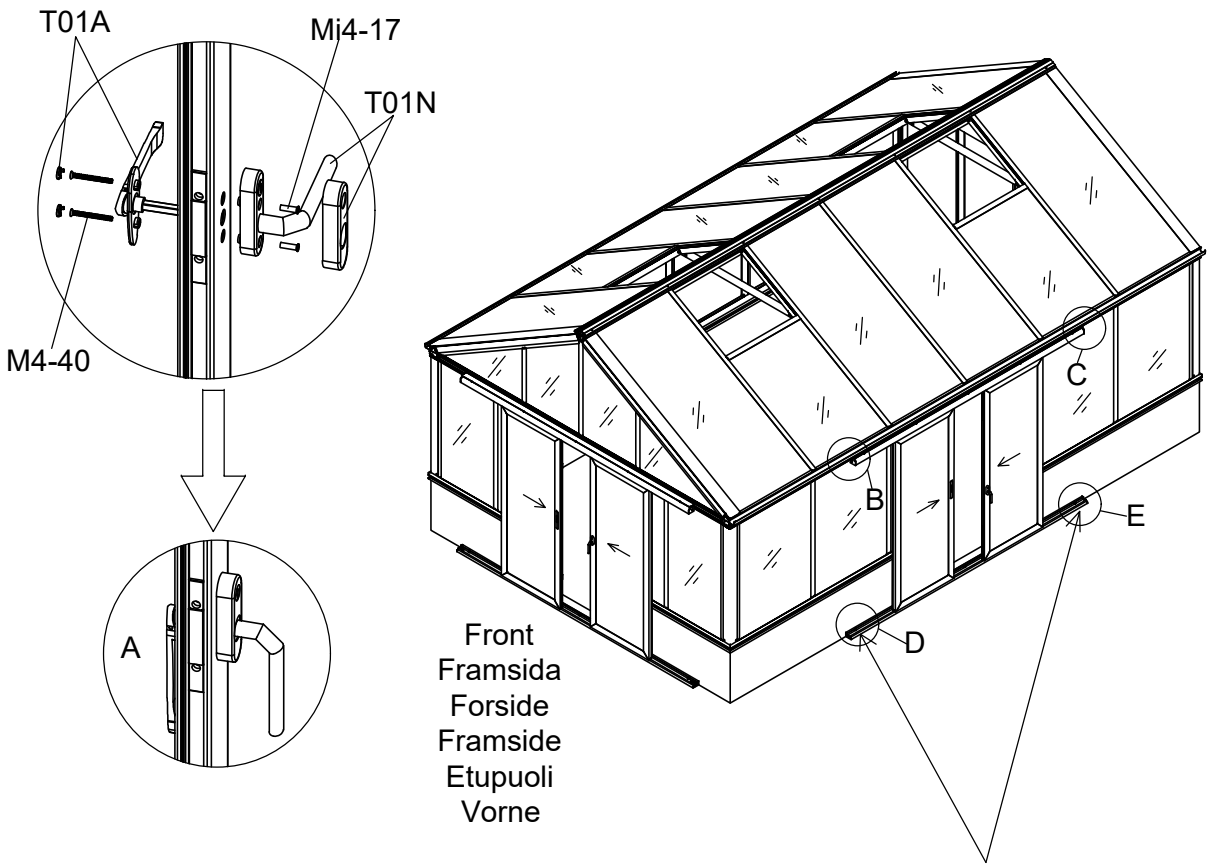


Adjust these door stoppers sideways if you want to open the door larger.
Justera avstånden av dörrstoppen i sidled om ni vill kunna öppna dörrarna ännu mer.
Justere dørstoppene sidelæns, for at give større åbning af døren.
Juster avstanden av dørstopperen sideveis om du vil kunne åpne døren ennå mer.
Säädä liukuovien stoppareiden etäisyys sivusuunnassa, mikäli haluat ovien avautuvan enemmän.
Stellen Sie den Türstopper seitlich ein, wenn Sie die Tür größer öffnen möchten.

| Part | NO. | QTY. | Length(MM) | CTN NO. |
|---|---|---|---|---|
| | T01N | 1 | PCS | 3040P-TD |
| | T01A | 1 | PCS | 3040P-TD |
| | J02 | 2 | PCS | 3040P-TD |
| | 7B33-049 | 1 | PCS | 3040P-TD |
| | 7B33-050 | 1 | PCS | 3040P-TD |
| | 7B33-051 | 1 | PCS | 3040P-TD |
| | 7B33-052 | 1 | PCS | 3040P-TD |
| | M4-40 | 2 | PCS | 3040P-TD |
| | Mi4-17 | 2 | PCS | 3040P-TD |
| | Z3.5-25 | 4 | PCS | 3040P-TD |
| | Za4.2-13 | 8 | PCS | 3040P-TD |

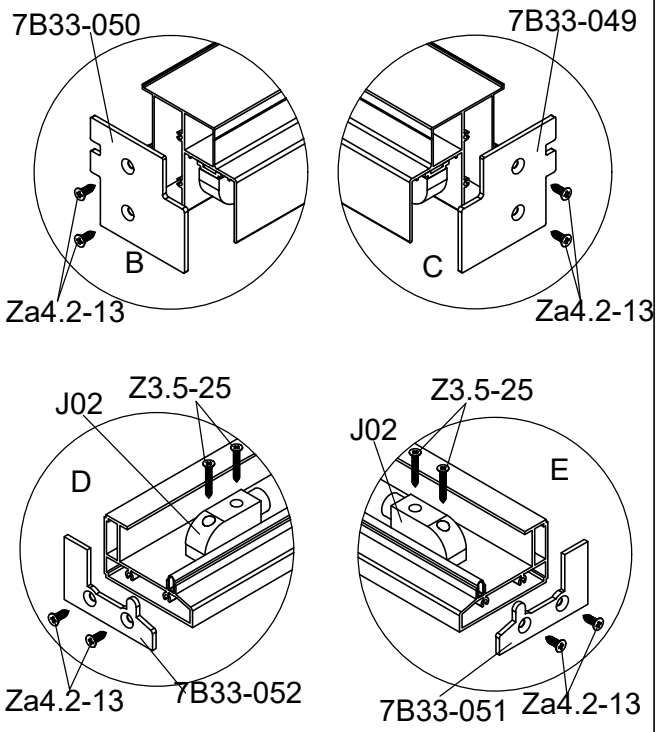


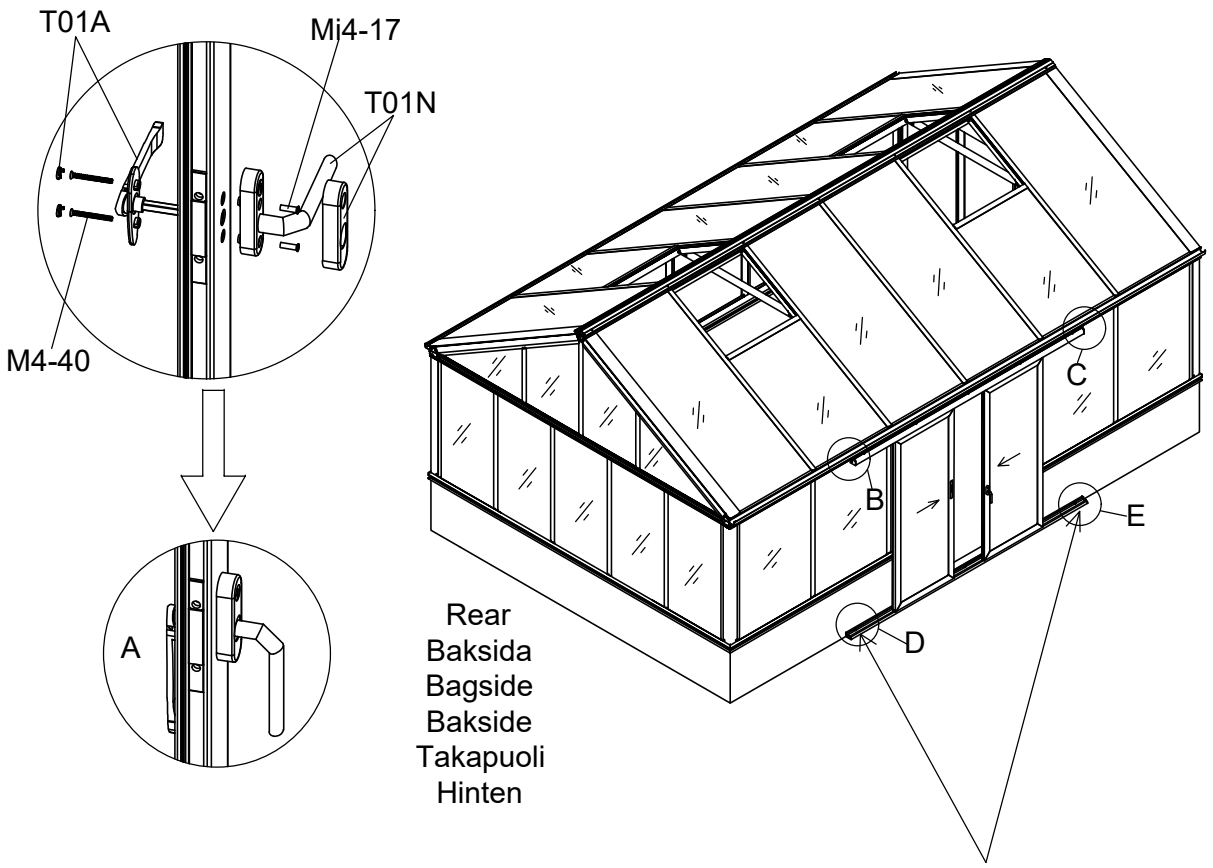


Adjust these door stoppers sideways if you want to open the door larger.
Justera avstånden av dörrstoppen i sidled om ni vill kunna öppna dörrarna ännu mer.
Justere dørstoppene sidelæns, for at give større åbning af døren.
Juster avstanden av dørstopperen sideveis om du vil kunne åpne døren ennå mer.
Säädä liukuovien stoppareiden etäisyys sivusuunnassa, mikäli haluat ovien avautuvan enemmän.
Stellen Sie den Türstopper seitlich ein, wenn Sie die Tür größer öffnen möchten.

| Part | NO. | QTY. | | | Length(MM) |
|---|---|---|---|---|---|
| | | 3711 | 3712 | 3713 | |
| | 41X-Y80 | 2 | 4 | 4 | 1087 |
| | 41X-Y81 | 4 | 8 | 8 | 887 |
| | 41X-Y82 | 2 | 4 | 4 | 1087 |
| | W02 | 8 | 16 | 16 | PCS |
| | W04 | 8 | 16 | 16 | PCS |
| | J12 | 6 | 12 | 12 | PCS |

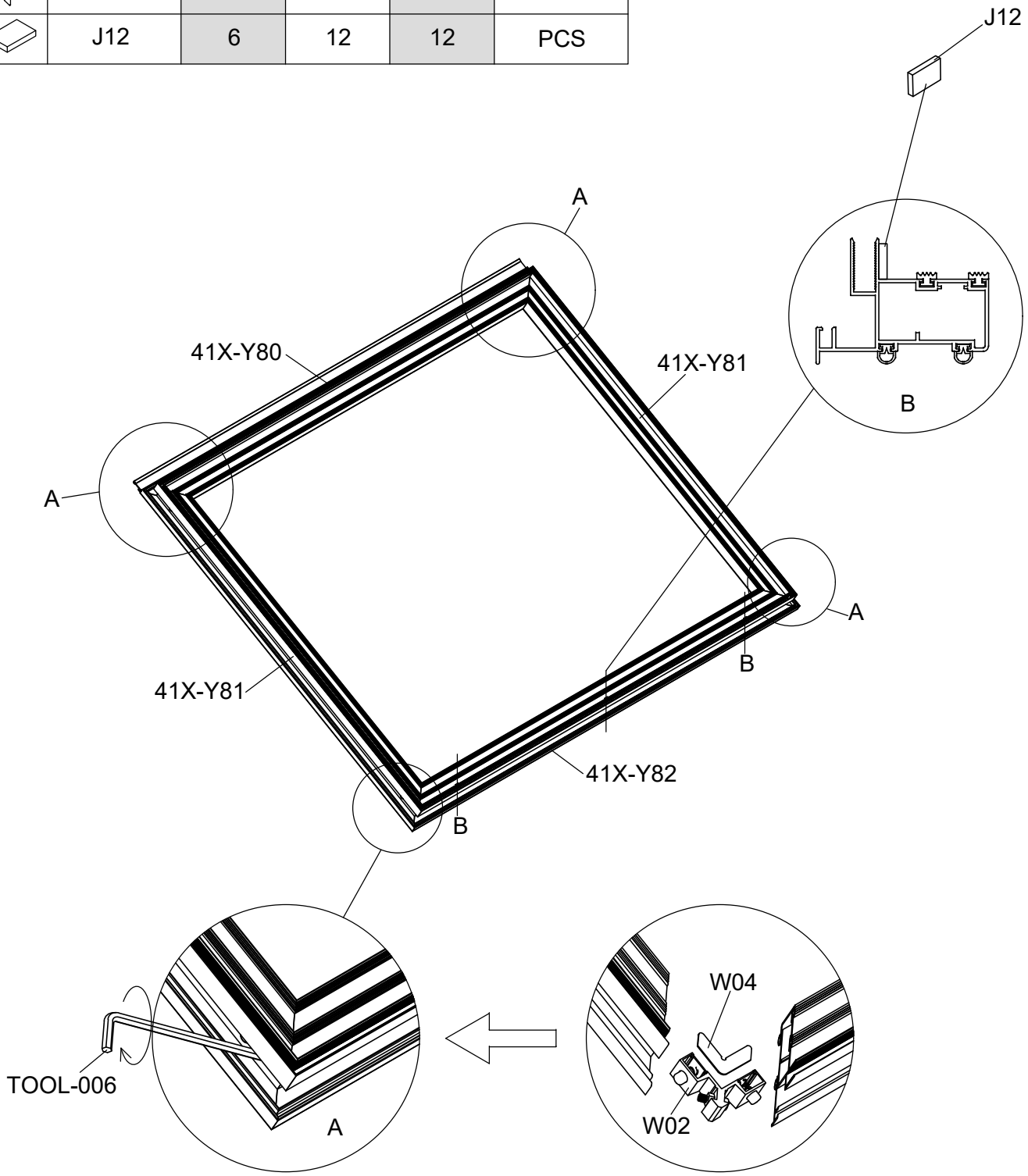

| Part | NO. | QTY. | | | Length(MM) |
|---|---|---|---|---|---|
| | | 3711 | 3712 | 3713 | |
| | 41X-Y83 | 4 | 8 | 8 | 877 |
| | 41X-Y84 | 4 | 8 | 8 | 1076 |
| | 1032×831 | 2 | 4 | 4 | 1032 |

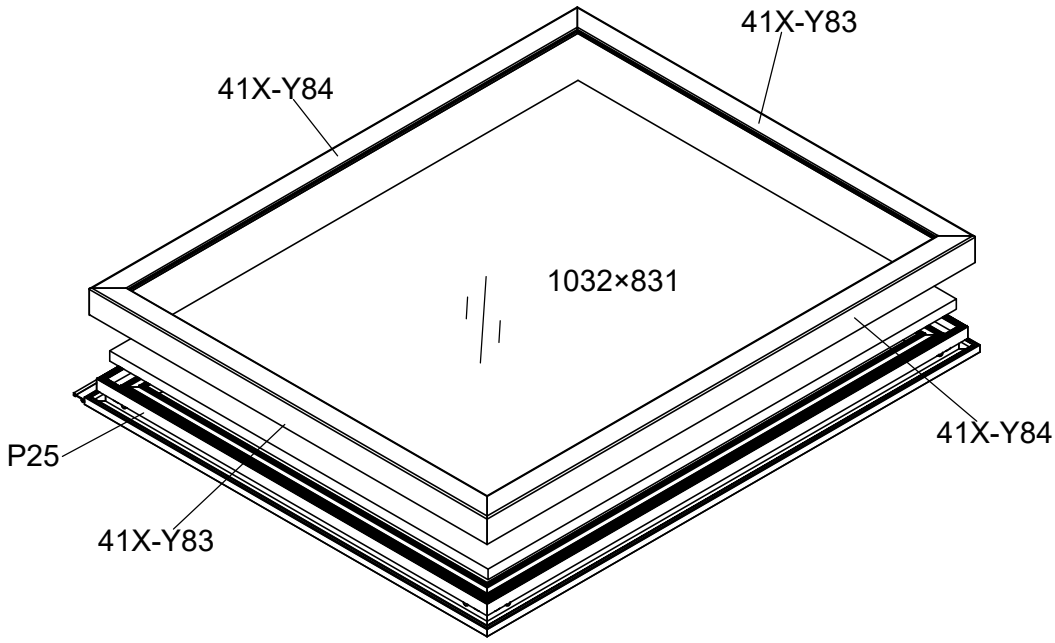


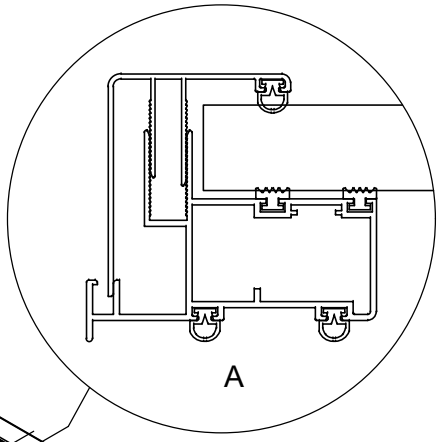


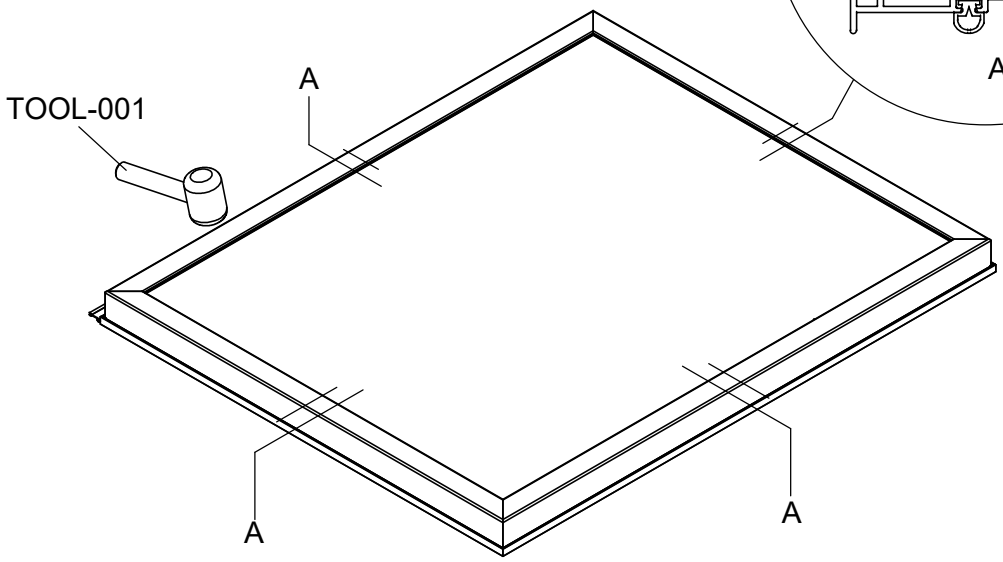

| Part | NO. | QTY. | | | Length(MM) |
|---|---|---|---|---|---|
| | | 3711 | 3712 | 3713 | |
| | 7C26-022 | 8.5M | 17M | 17M | |

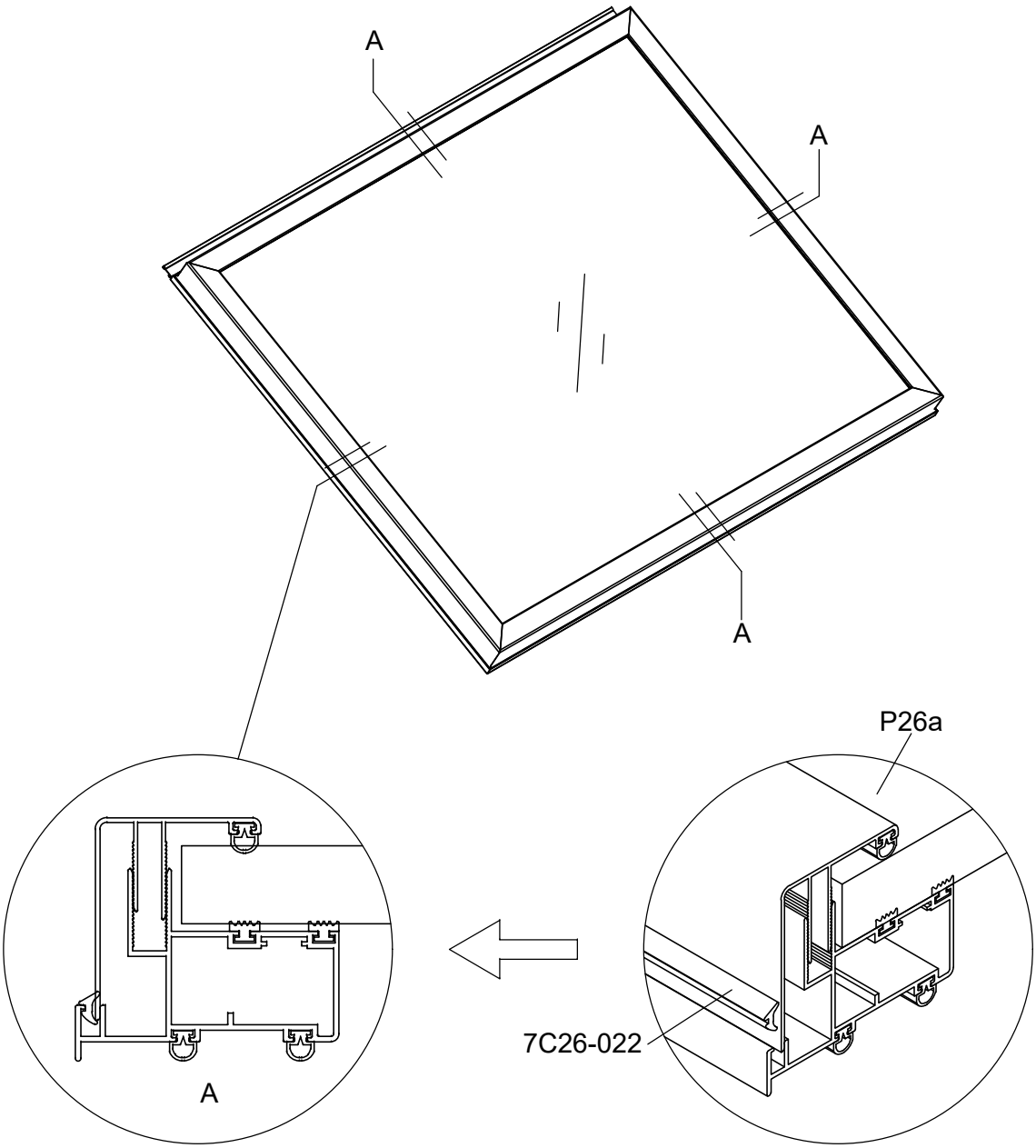

| Part | NO. | QTY. | | | Length(MM) |
|---|---|---|---|---|---|
| | | 3711 | 3712 | 3713 | |
| | T07 | 4 | 4 | 4 | PCS |

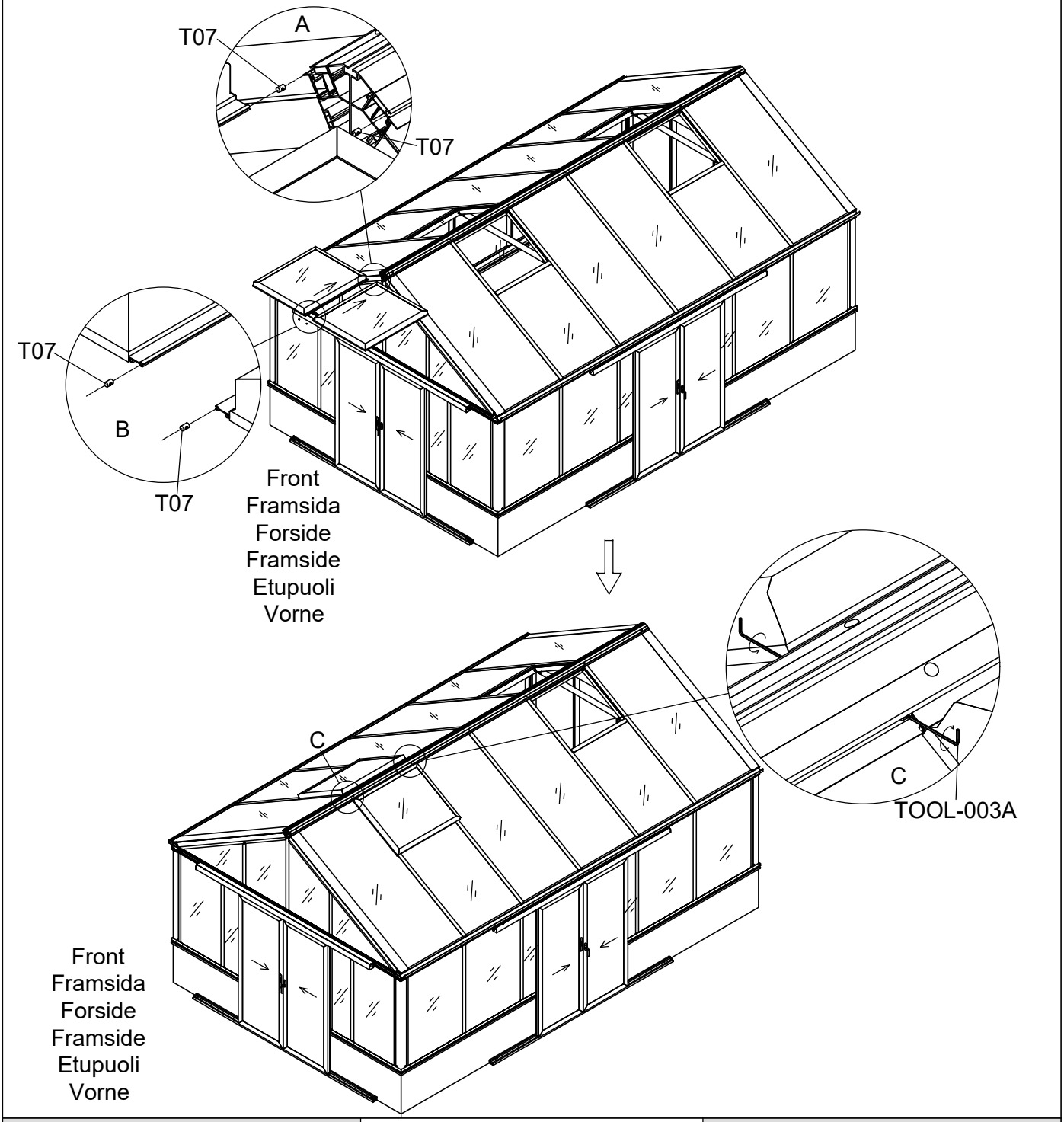


| 3711 | 3712 | 3713 |
|---|---|---|
| 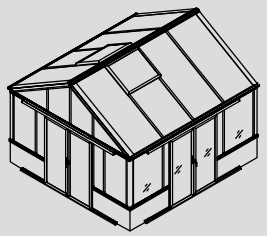 | 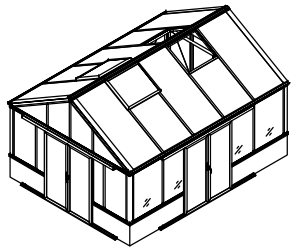 | 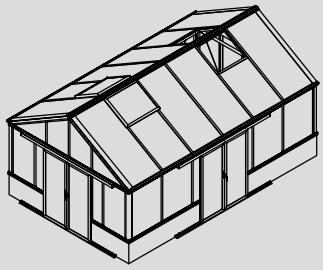 |

| Part | NO. | QTY. | | Length(MM) |
|---|---|---|---|---|
| | | 3712 | 3713 | |
| | T07 | 4 | 4 | PCS |

| | |
|---|---|
| 3712 | 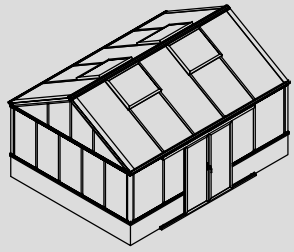 |
| 3713 | 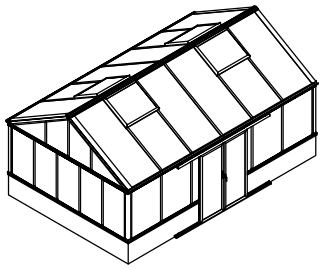 |

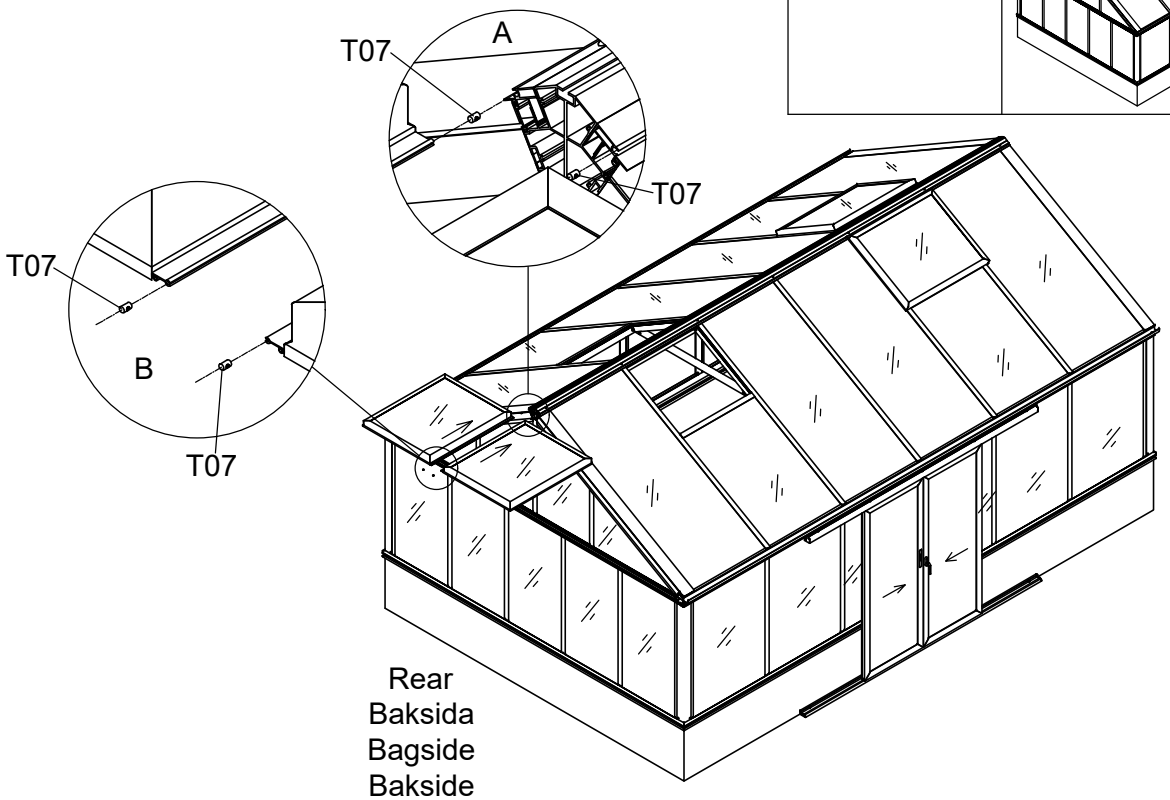


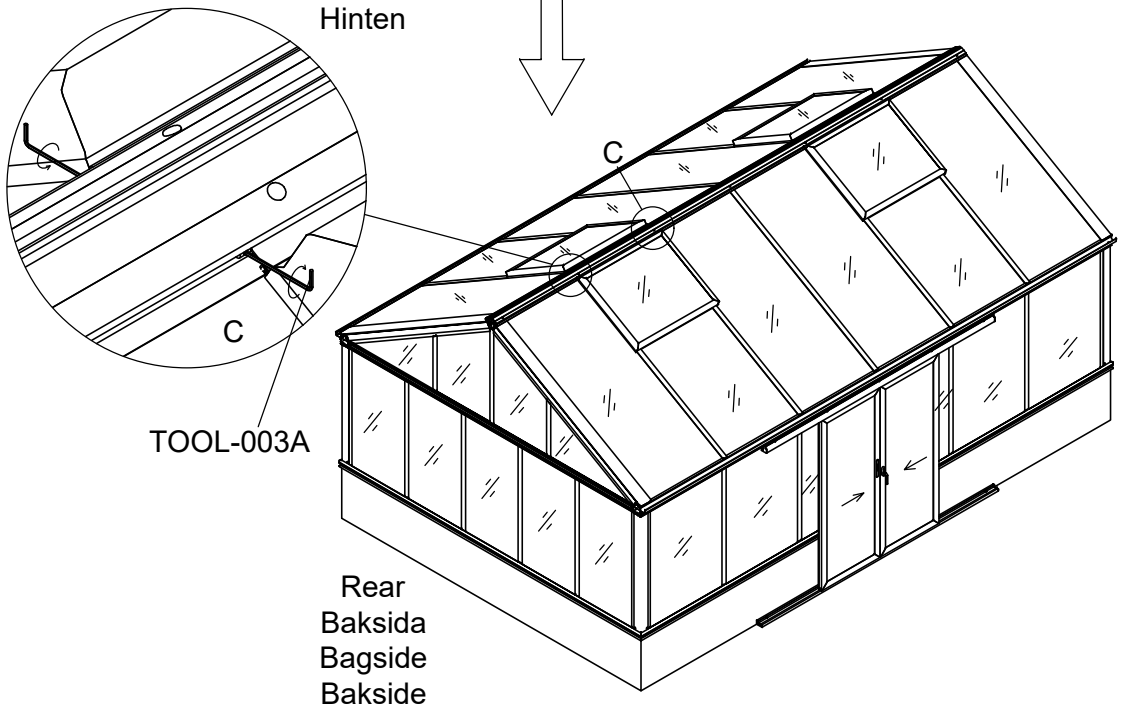

| Part | Product | NO. | Length(MM) | CTN NO. | QTY. | Code |
|---|---|---|---|---|---|---|
| | 3711 | 41X-Y62-4B | 603 | 3701P-TS-4 | 4 | A016 |
| | 3712 | 41X-Y62-5B | 1103 | 3701P-TS-5 | | |
| | 3713 | 41X-Y62-6B | 1604 | 3701P-TS-6 | | |

| Part | NO. | QTY. | Length(MM) | CTN NO. |
|---|---|---|---|---|
| | 51X-Y60-A | 1 | 3774 | 3701P-TS-5F |
| | 41X-Y61-A | 1 | 3023 | 3701P-TS-5G |
| | 51X-Y60-B | 2 | 375 | 3701P-TS-5G |

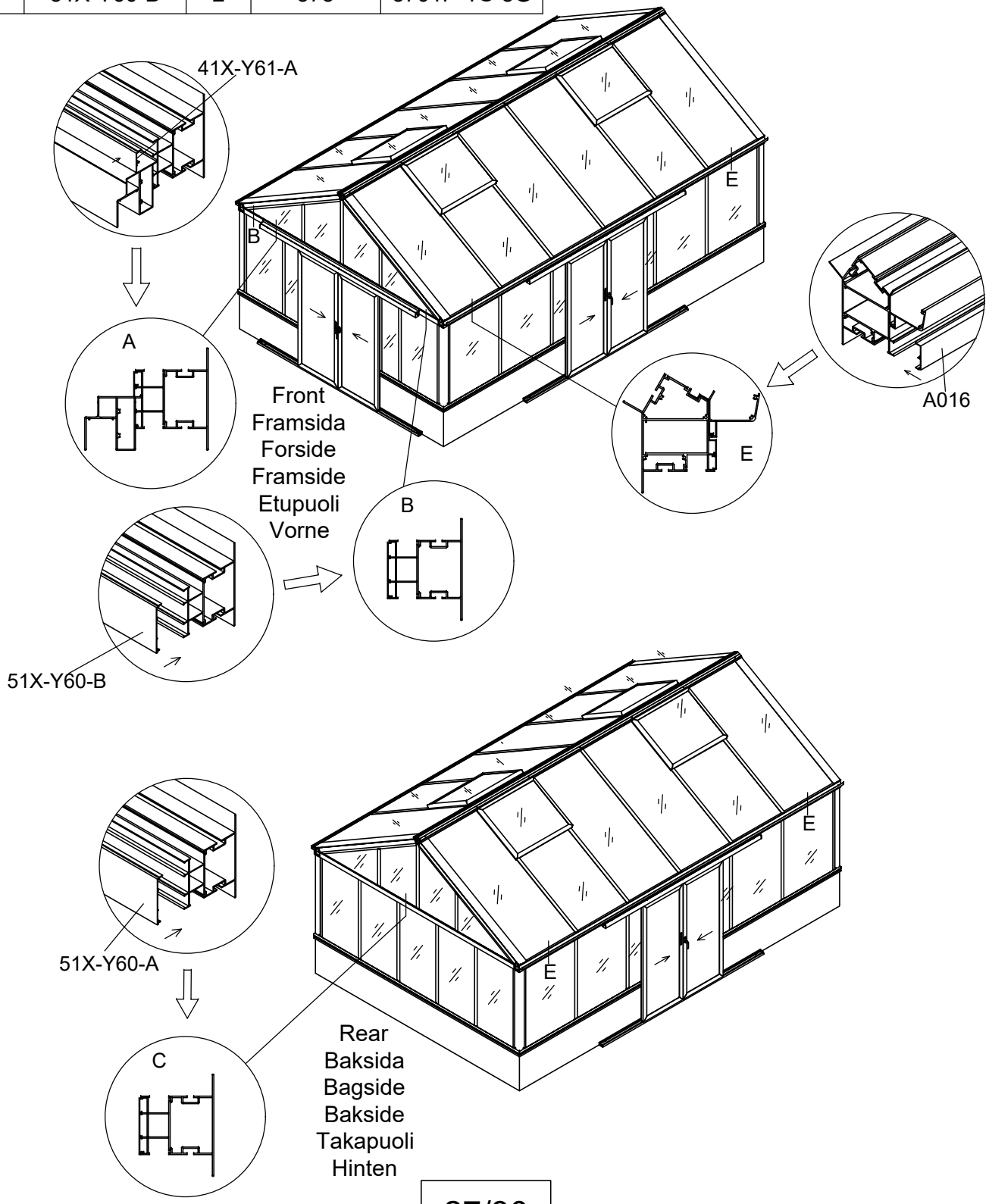

| Part | NO. | QTY. | Length(MM) |
|---|---|---|---|
| | 7C33-S02 | 2 | PCS |

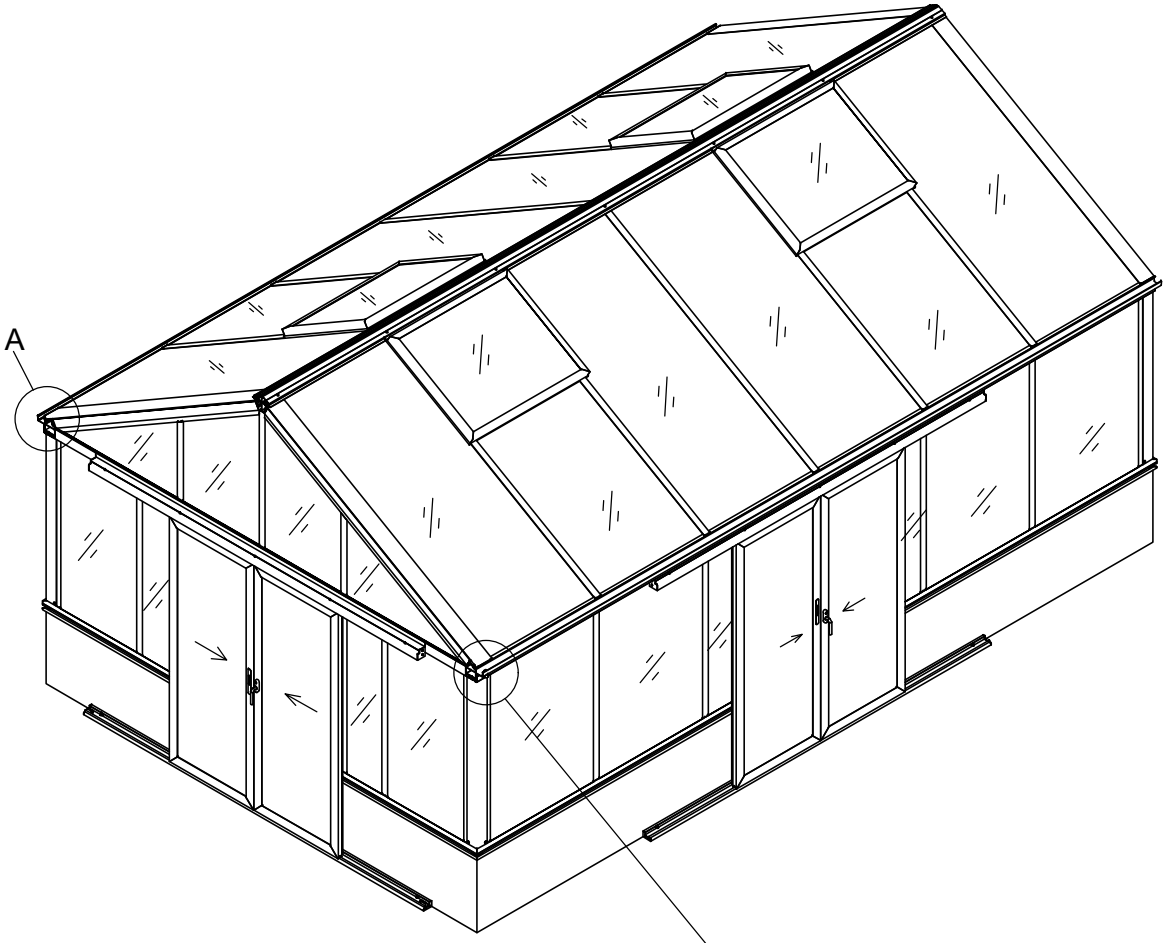


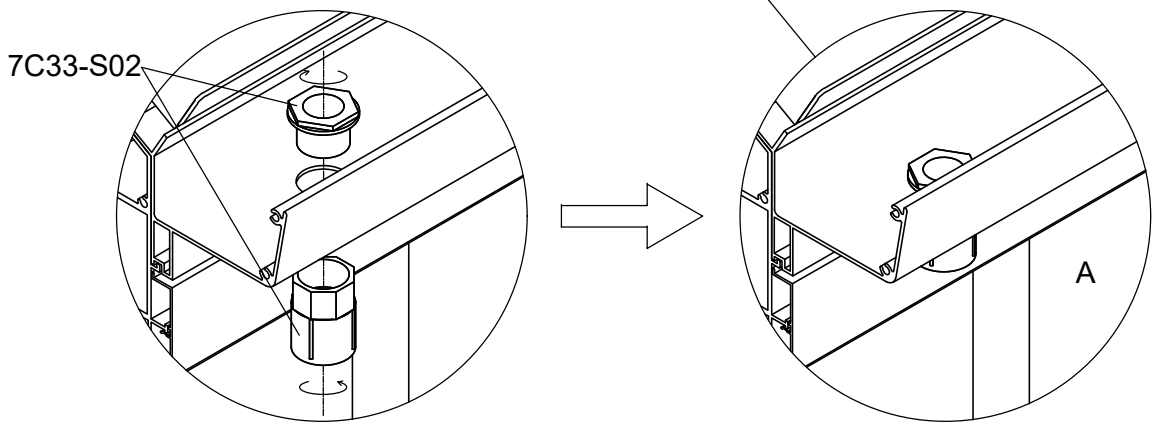

| Part | NO. | QTY. | Length(MM) |
|---|---|---|---|
| | 7C33-S01 | 2 | 1980 |
| | 7C33-S03 | 4 | PCS |
| | Z4.8-25 | 4 | PCS |

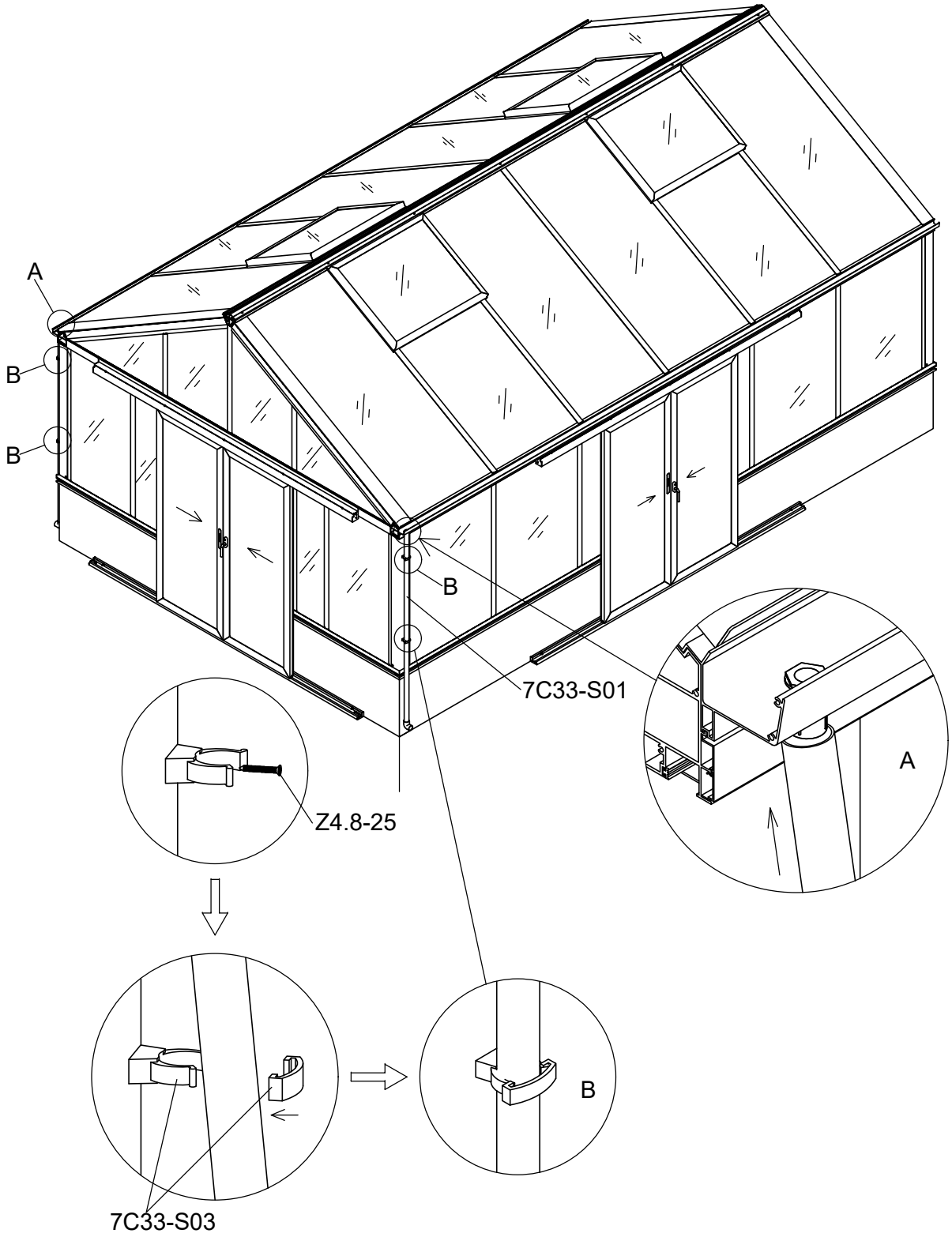

| Part | NO. | QTY. | Length(MM) |
|---|---|---|---|
| | 7B33-016 | 2 | PCS |
| | 7C33-005 | 2 | PCS |
| | 7B33-015L | 2 | PCS |
| | 7B33-015R | 2 | PCS |
| | 7C33-004 | 4 | PCS |
| | Za4.2-13 | 36 | PCS |

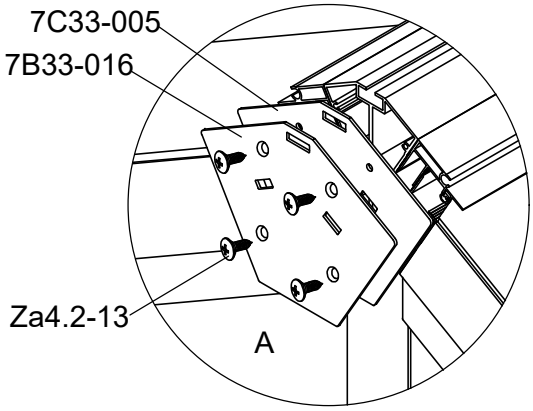


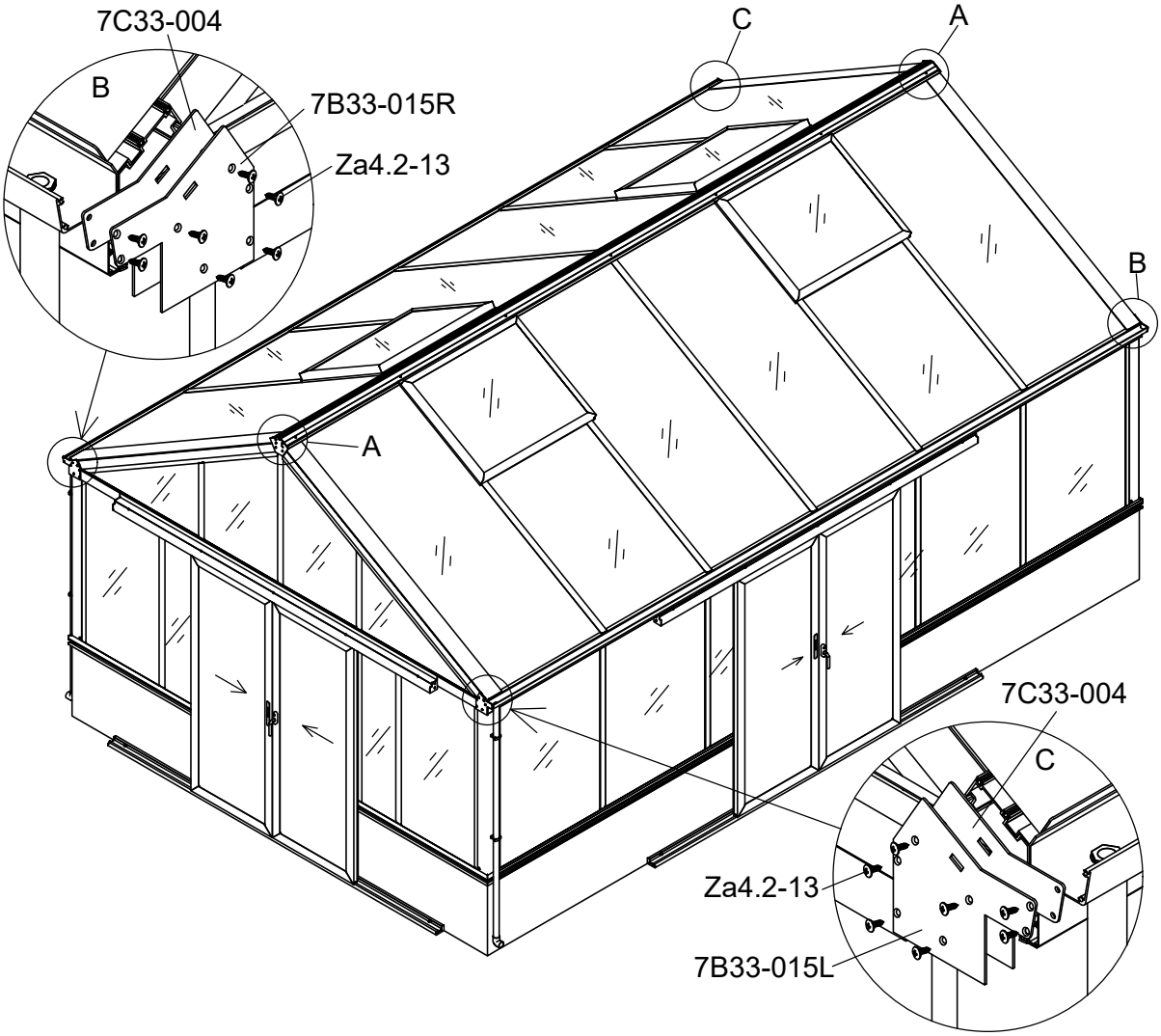


| 3711 | 3712 | 3713 |
|---|---|---|
| 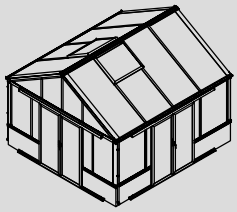 | 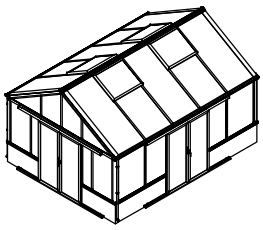 | 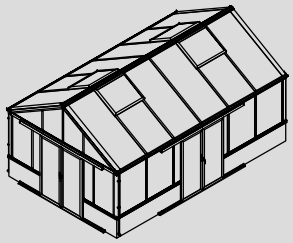 |

| Part | Product | NO. | Length(MM) | CTN NO. | Code |
|---|---|---|---|---|---|
| | 3711 | 41A-S11-4R | 1395 | 3701P-TS-4 | A010 |
| | 3712 | 41A-S11-5R | 1895 | 3701P-TS-5 | |
| | 3713 | 41A-S11-6R | 2396 | 3701P-TS-6 | |
| | 3711 | 41A-S11-4L | 1395 | 3701P-TS-4 | A011 |
| | 3712 | 41A-S11-5L | 1895 | 3701P-TS-5 | |
| | 3713 | 41A-S11-6L | 2396 | 3701P-TS-6 | |

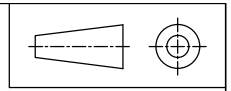

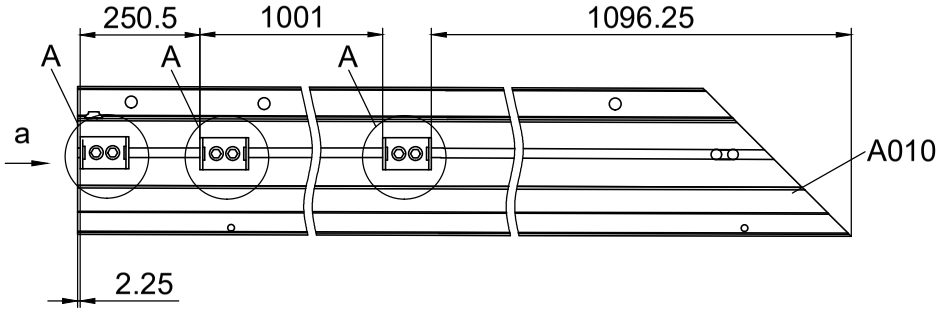


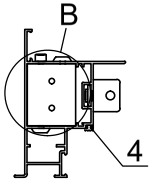


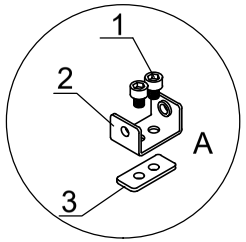


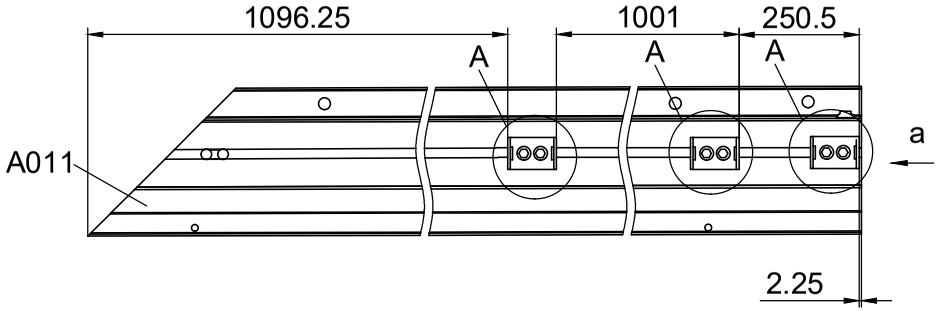


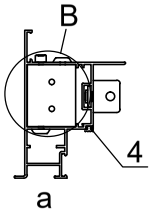


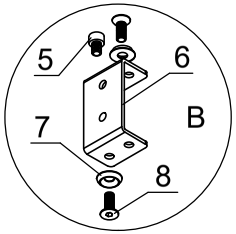


| NO. | |
|---|---|
| 1 | M8-10 |
| 2 | 7B33-005 |
| 3 | 7B33-004 |
| 4 | 7C33-002 |
| 5 | M6-8 |
| 6 | 7B33-047 |
| 7 | J05 |
| 8 | Si6-16 |

F1

| Part | NO. | Length(MM) | CTN NO. |
|---|---|---|---|
| | 51A-Y12 | 3990 | 3701P-TS-5F |
| | 51A-Y13R | 1270 | 3701P-TS-5G |
| | 51A-Y13L | 1270 | 3701P-TS-5G |

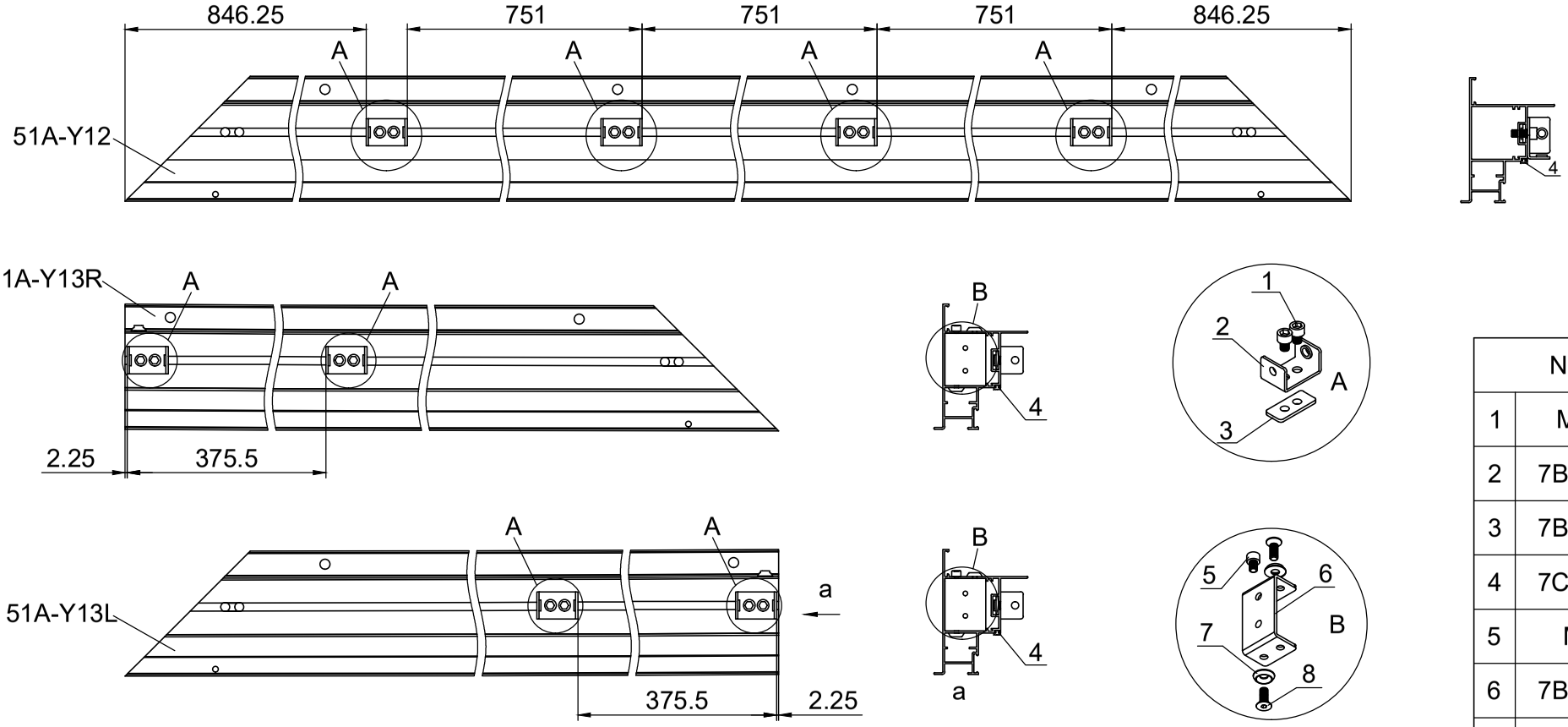


| NO. | |
|---|---|
| 1 | M8-10 |
| 2 | 7B33-005 |
| 3 | 7B33-004 |
| 4 | 7C33-002 |
| 5 | M6-8 |
| 6 | 7B33-047 |
| 7 | J05 |
| 8 | Si6-16 |

F2

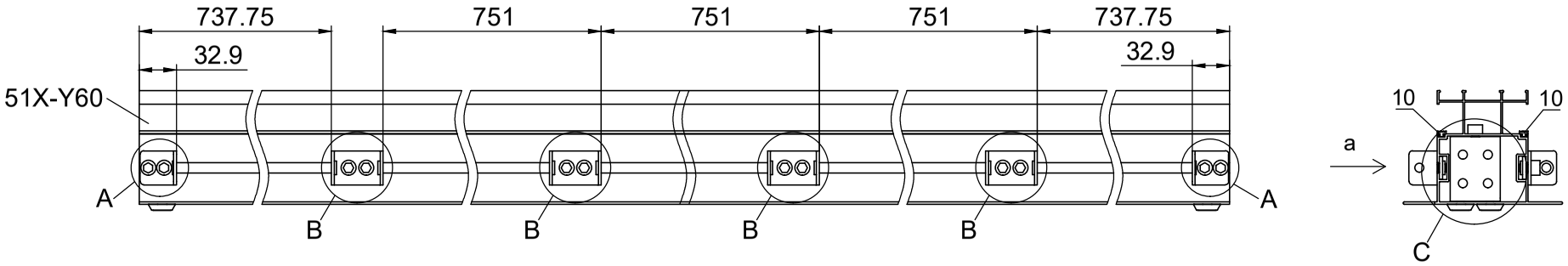


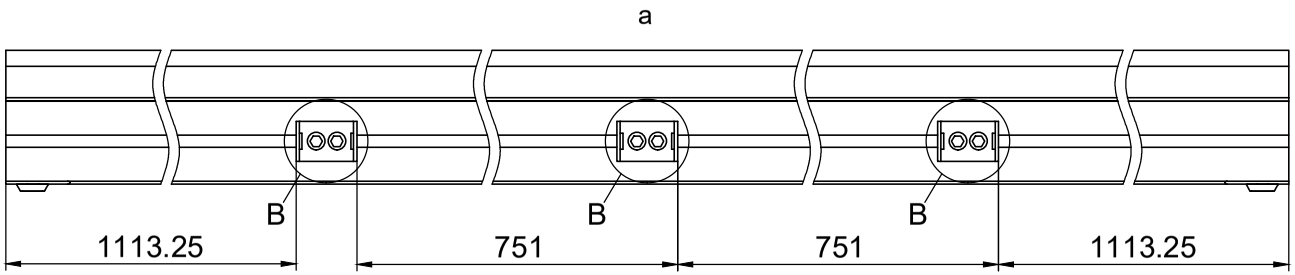


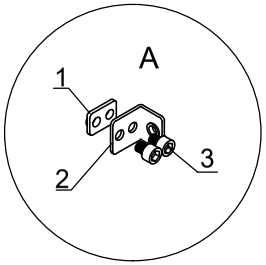


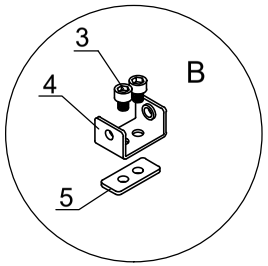


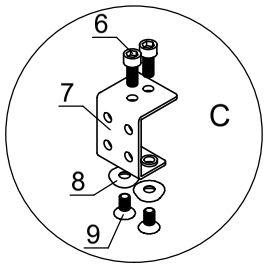


| NO. | |
|---|---|
| 1 | 7B33-006 |
| 2 | 7B33-007 |
| 3 | M8-10 |
| 4 | 7B33-005 |
| 5 | 7B33-004 |
| 6 | M8-20 |
| 7 | 7B33-009 |
| 8 | 7B33-020 |
| 9 | Si8-16 |
| 10 | 7C33-002 |

F3

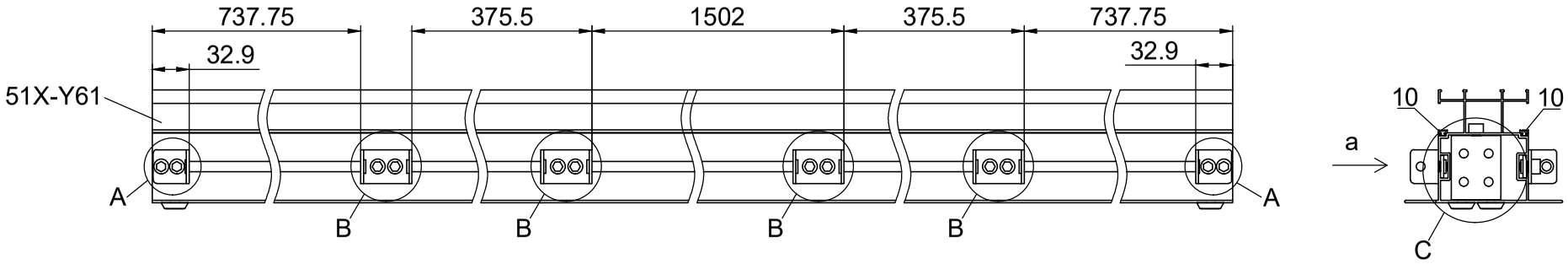


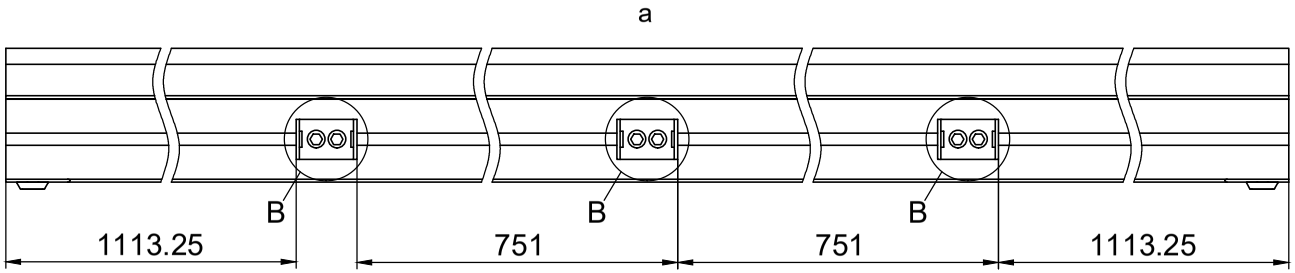


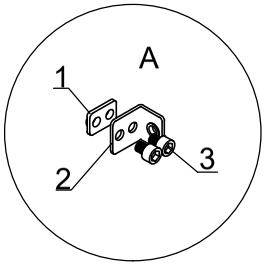


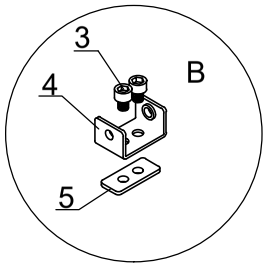


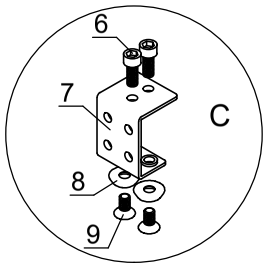


| NO. | |
|---|---|
| 1 | 7B33-006 |
| 2 | 7B33-007 |
| 3 | M8-10 |
| 4 | 7B33-005 |
| 5 | 7B33-004 |
| 6 | M8-20 |
| 7 | 7B33-009 |
| 8 | 7B33-020 |
| 9 | Si8-16 |
| 10 | 7C33-002 |

F4

| Part | Product | NO. | Length(MM) | Code |
|---|---|---|---|---|
| | 3711 | 41X-Y62-4 | 4228 | A003 |
| | 3712 | 41X-Y62-5 | 5229 | |
| | 3713 | 41X-Y62-6 | 6230 | |

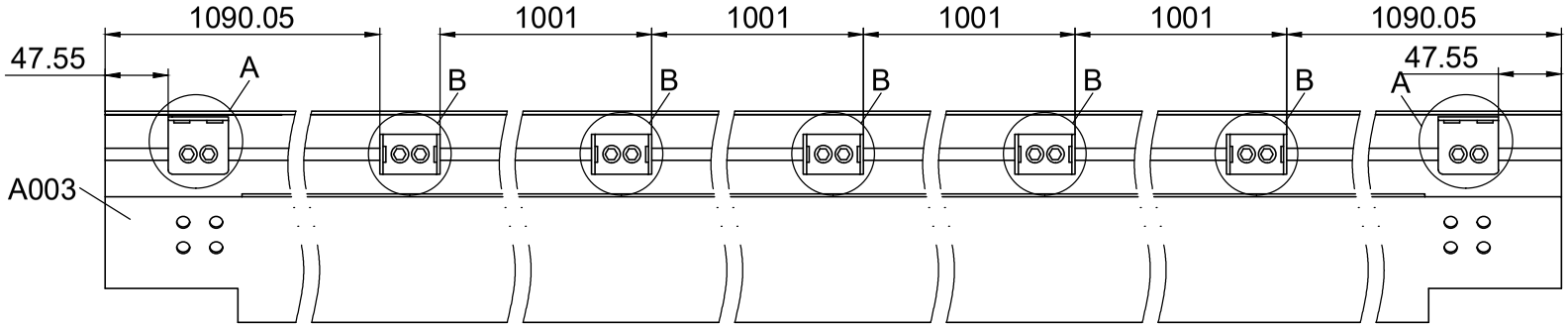


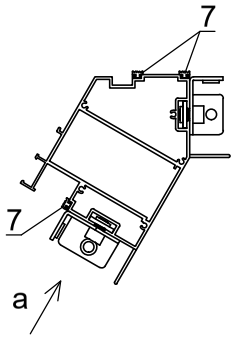


a

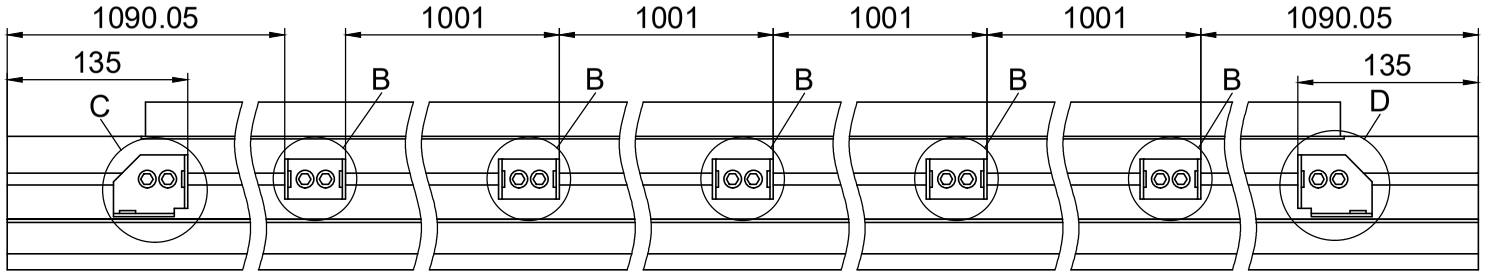


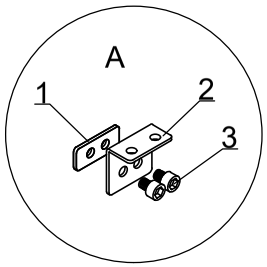


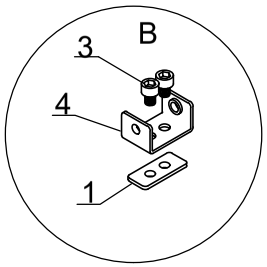


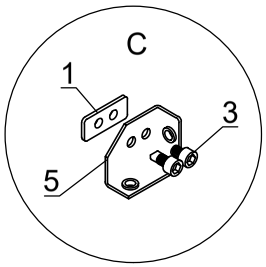


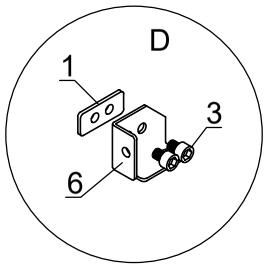


F5

| | NO. |
|---|---|
| 1 | 7B33-004 |
| 2 | 7B33-010 |
| 3 | M8-10 |
| 4 | 7B33-005 |
| 5 | 7B33-003 |
| 6 | 7B33-002 |
| 7 | 7C33-002 |

| Part | Product | NO. | Length(MM) | Code |
|---|---|---|---|---|
| | 3711 | 41X-Y63-4 | 4207 | A004 |
| | 3712 | 41X-Y63-5 | 5208 | |
| | 3713 | 41X-Y63-6 | 6209 | |

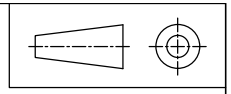

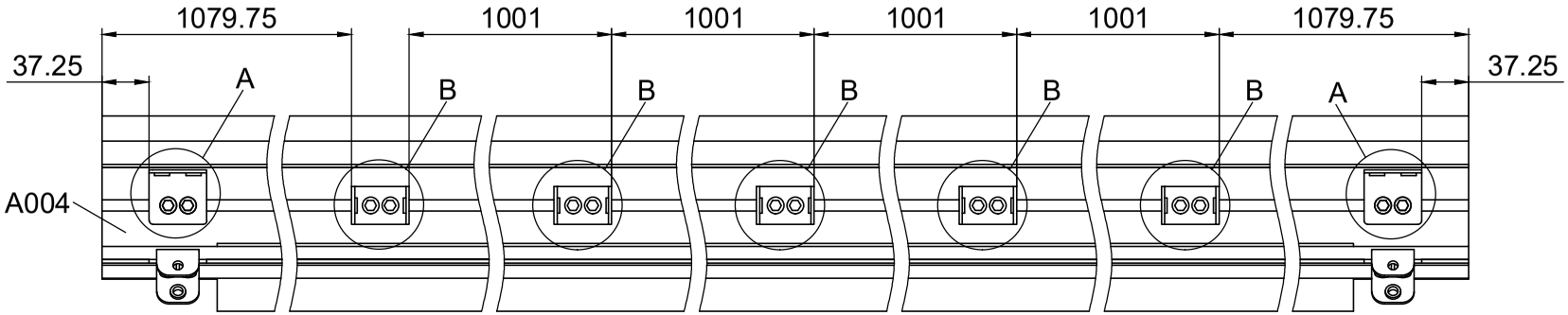


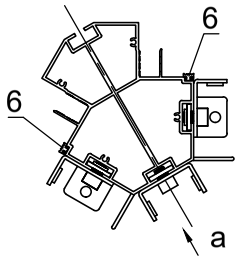


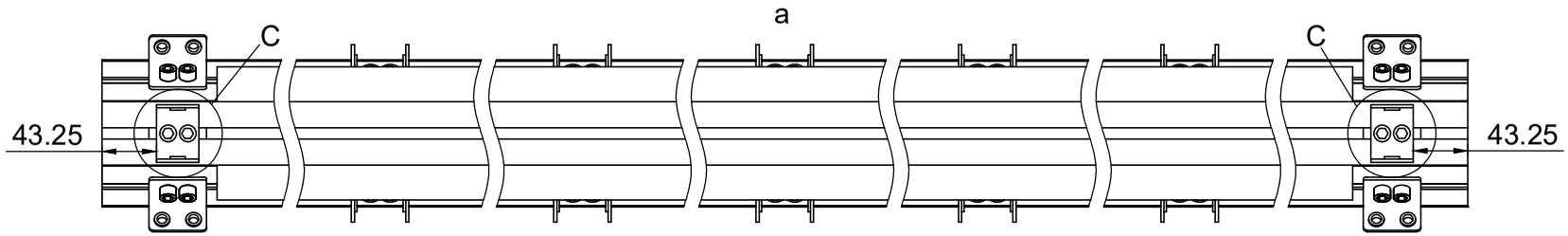


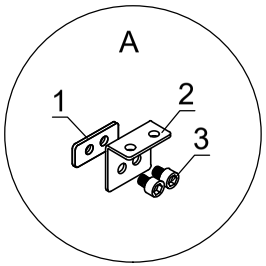


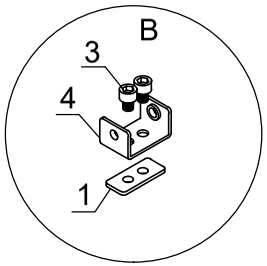


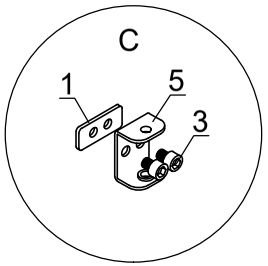


F6

| NO. | |
|---|---|
| 1 | 7B33-004 |
| 2 | 7B33-010 |
| 3 | M8-10 |
| 4 | 7B33-005 |
| 5 | 7B33-011 |
| 6 | 7C33-002 |

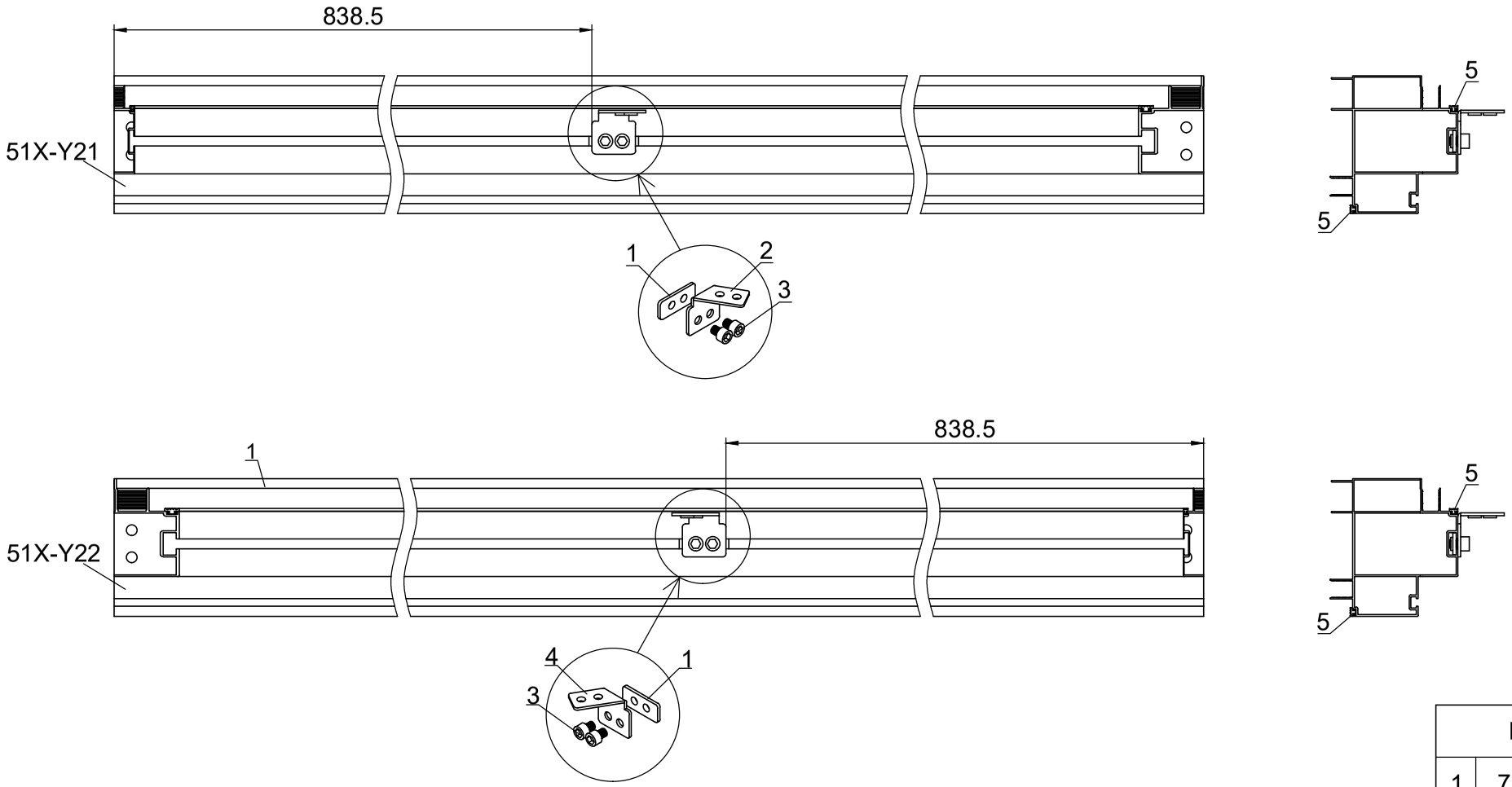


| NO. | |
|---|---|
| 1 | 7B33-004 |
| 2 | 7B33-013R |
| 3 | M8-10 |
| 4 | 7B33-013L |
| 5 | 7C33-002 |

F7

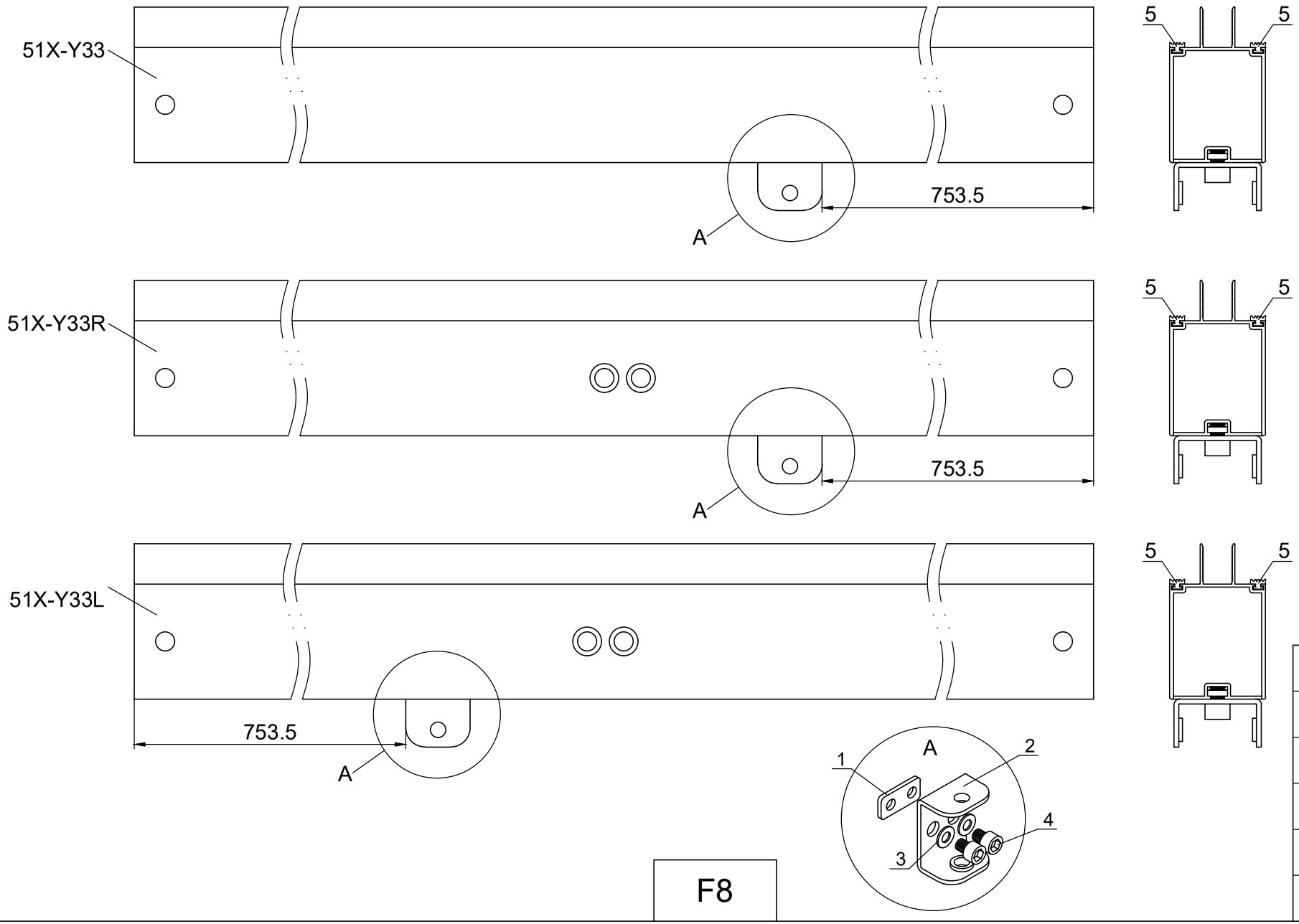


| NO. | |
|---|---|
| 1 | 7B26-033 |
| 2 | 7B33-011 |
| 3 | MD6 |
| 4 | M6-10 |
| 5 | 7C33-002 |

F8